DISCRETE SEMICONDUCTORS

Thyristors and Triacs

BOOK SC03 1991

Philips Components

PHILIPS

THYRISTORS AND TRIACS

Contents

page

Selection guide 5

Index 9

General

Type designation 13
Rating systems 15
Letter symbols 17
Quality conformance and reliability 19
General explanatory notes 21
Packing (SOT223) 39
Soldering recommendations (SOT223) 41
Thermal characteristics (SOT223) 45
Tape (TO-92) 49
Flat heatsink 53

Device data in alpha-numerical sequence 57

Accessories 365

Mounting instructions 377

SELECTION GUIDE

GATE TURN-OFF THYRISTORS

$I_{T(AV)}$ max. (A)	I_{TCRM} max. (A)		Outline	V_{DRMmax} (V) 600	800	850	1000	1300	1500	Page
6.5	25	BTW58	TO-220AB				●	●	●	329
10	25	BTV58	TO-220AB	●		●	●			285
10	50	BTR59	SOT-93		●			●		259

THYRISTORS

General purpose thyristors

$I_{T(RMS)max}$ (A)		Outline	V_{RRMmax} (V) 200	400	500	600	650	800	1000	1200	Page
0.8	BT149	TO-92	●	●	●	●					193
0.8	BT169	TO-92	●	●	●	●					245
0.8	2N5064	TO-92	●								359
1	BT148W	SOT-223		●	●	●					187
4	BT148	SOT-82		●	●	●					179
4	BT150	TO-220AB			●						197
6	BT153	TO-220AB			●						233
9	BT151F	SOT-186			●		●	●			215
12	BT151	TO-220AB			●		●	●			205
16	BTY79	TO-64		●	●	●		●	●		341
16	BTW38	TO-64				●		●	●		297
16	BTW42	TO-64				●		●	●		311
20	BT152	TO-220AB		●		●		●			225
25	BT145	TO-220AB			●	●		●			171
25	BTW45	TO-48		●		●		●	●	●	323
25	BTY91	TO-48		●	●	●		●			351
32	BTW40	TO-48		●		●		●			305

TRIACS

$I_{T(RMS)max}$ (A)		Outline	V_{DRMmax} (V) 500	600	700	800	1000	Page
1	BT134W	SOT-223	●	●	●	●		69
4	BT134	SOT-82	●	●	●	●		59
4	BT136	TO-220AB	●	●	●	●		75
4	BT136F	SOT-186	●	●	●	●		87
8	BT137	TO-220AB	●	●	●	●		99
8	BT137F	SOT-186	●	●	●	●		111
12	BT138	TO-220AB	●	●	●	●		123
12	BT138F	SOT-186	●	●	●	●		135
15	BTW43	TO-64		●		●	●	315
16	BT139	TO-220AB	●	●	●	●		147
16	BT139F	SOT-186	●	●	●	●		159
25	BTA140	TO-220AB	●	●	●	●		249

	Page
Bi-directional trigger device BR100/03: $V_{(BO)}$ = 28 to 36 V; I_{FRMmax} = 2 A	57

INDEX

Type No.	Page
BR100/3	57
BT134 series	59
BT134W series	69
BT136 series	75
BT136F series	87
BT137 series	99
BT137F series	111
BT138 series	123
BT138F series	135
BT139 series	147
BT139F series	159
BT145 series	171
BT148 series	179
BT148W series	187
BT149 series	193
BT150	197
BT151 series	205
BT151F series	215
BT152 series	225
BT153	233
BT169 series	245
BTA140 series	249
BTR59 series	259
BTS59 series	273
BTV58 series	285
BTW38 series	297
BTW40 series	305
BTW42 series	311
BTW43 series	315
BTW45 series	323
BTW58 series	329
BTY79 series	341
BTY91 series	351
2N5064	359
56264a, b	366
56295a, b, c	367
56353	368
56354	368
56359b, c, d	369
56360a	370
56363	370
56364	370
56367	371
56368b, c	372
56369	371
56378	373
56379	373

GENERAL

Type designation
Rating systems
Letter symbols
Quality conformance and reliability
General explanatory notes
Packing (SOT223)
Soldering recommendations (SOT223)
Thermal characteristics (SOT223)
Tape (TO-92)
Flat heatsink

PRO ELECTRON TYPE DESIGNATION CODE FOR SEMICONDUCTOR DEVICES

This type designation code applies to discrete semiconductor devices – as opposed to integrated circuits –, multiples of such devices and semiconductor chips.

"Although not all type numbers accord with the Pro Electron system, the following explanation is given for the ones that do."

A basic type number consists of:

TWO LETTERS FOLLOWED BY A SERIAL NUMBER

FIRST LETTER

The first letter gives information about the material used for the active part of the devices.

A. GERMANIUM or other material with band gap of 0,6 to 1,0 eV.
B. SILICON or other material with band gap of 1,0 to 1,3 eV.
C. GALLIUM-ARSENIDE or other material with band gap of 1,3 eV or more.
R. COMPOUND MATERIALS (e.g. Cadmium-Sulphide).

SECOND LETTER

The second letter indicates the function for which the device is primarily designed.

A. DIODE; signal, low power
B. DIODE; variable capacitance
C. TRANSISTOR; low power, audio frequency ($R_{th\ j\text{-}mb} > 15$ K/W)
D. TRANSISTOR; power, audio frequency ($R_{th\ j\text{-}mb} \leqslant 15$ K/W)
E. DIODE; tunnel
F. TRANSISTOR; low power, high frequency ($R_{th\ j\text{-}mb} > 15$ K/W)
G. MULTIPLE OF DISSIMILAR DEVICES – MISCELLANEOUS; e.g. oscillator
H. DIODE; magnetic sensitive
L. TRANSISTOR; power, high frequency ($R_{th\ j\text{-}mb} \leqslant 15$ K/W)
N. PHOTO-COUPLER
P. RADIATION DETECTOR; e.g. high sensitivity phototransistor
Q. RADIATION GENERATOR; e.g. light-emitting diode (LED)
R. CONTROL AND SWITCHING DEVICE; e.g. thyristor, low power ($R_{th\ j\text{-}mb} > 15$ K/W)
S. TRANSISTOR; low power, switching ($R_{th\ j\text{-}mb} > 15$ K/W)
T. CONTROL AND SWITCHING DEVICE; e.g. thyristor, power ($R_{th\ j\text{-}mb} \leqslant 15$ K/W)
U. TRANSISTOR; power, switching ($R_{th\ j\text{-}mb} \leqslant 15$ K/W)
X. DIODE: multiplier, e.g. varactor, step recovery
Y. DIODE; rectifying, booster
Z. DIODE; voltage reference or regulator (transient suppressor diode, with third letter W)

The remainder of the type number is a **serial number** indicating a particular design or development and is in one of the following two groups:

(a) **A serial number** consisting of three figures from 100 to 999.

(b) **A serial number** consisting of one letter (Z, Y, X, W, etc.) followed by two figures.

RANGE NUMBERS

Where there is a range of variants of a basic type of rectifier diode, thyristor or voltage regulator diode the type number as defined above is often used to identify the range; further letters and figures are added after a hyphen to identify associated types within the range. These additions are as follows:

RECTIFIER DIODES, THYRISTORS AND TRIACS

A group of figures indicating the rated repetitive peak reverse voltage, V_{RRM}, or the rated repetitive peak off-state voltage, V_{DRM}, whichever value is lower, in volts for each type.

The final letter R is used to denote a reverse polarity version (stud-anode) where applicable. The normal polarity version (stud cathode) has no special final letter.

REGULATOR DIODES

A first letter indicating the nominal percentage tolerance in the operating voltage V_Z.

A. 1% (according to IEC 63: series E96)
B. 2% (according to IEC 63: series E48)
C. 5% (according to IEC 63: series E24)
D. 10% (according to IEC 63: series E12)
E. 20% (according to IEC 63: series E6)

A group of figures indicating the typical operating voltage V_Z for each type at the nominal operating current I_Z rating of the range.

The letter V is used to denote a decimal sign.

The final letter R is used to denote a reverse polarity version (stud anode) where applicable. The normal polarity version (stud cathode) has no special final letter.

Example:

BTW38-800R	Silicon thyristor in the BTW38 range with 800 V maximum repetitive peak voltage, reverse polarity, stud connected to anode.

RATING SYSTEMS

The rating systems described are those recommended by the International Electrotechnical Commission (IEC) in its Publication 134.

DEFINITIONS OF TERMS USED

Electronic device. An electronic tube or valve, transistor or other semiconductor device.

Note
This definition excludes inductors, capacitors, resistors and similar components.

Characteristic. A characteristic is an inherent and measurable property of a device. Such a property may be electrical, mechanical, thermal, hydraulic, electro-magnetic, or nuclear, and can be expressed as a value for stated or recognized conditions. A characteristic may also be a set of related values, usually shown in graphical form.

Bogey electronic device. An electronic device whose characteristics have the published nominal values for the type. A bogey electronic device for any particular application can be obtained by considering only those characteristics which are directly related to the application.

Rating. A value which establishes either a limiting capability or a limiting condition for an electronic device. It is determined for specified values of environment and operation, and may be stated in any suitable terms.

Note
Limiting conditions may be either maxima or minima.

Rating system. The set of principles upon which ratings are established and which determine their interpretation.

Note
The rating system indicates the division of responsibility between the device manufacturer and the circuit designer, with the object of ensuring that the working conditions do not exceed the ratings.

ABSOLUTE MAXIMUM RATING SYSTEM (As used throughout this book)

Absolute maximum ratings are limiting values of operating and environmental conditions applicable to any electronic device of a specified type as defined by its published data, which should not be exceeded under the worst probable conditions.

These values are chosen by the device manufacturer to provide acceptable serviceability of the device, taking no responsibility for equipment variations, environmental variations, and the effects of changes in operating conditions due to variations in the characteristics of the device under consideration and of all other electronic devices in the equipment.

The equipment manufacturer should design so that, initially and throughout life, no absolute maximum value for the intended service is exceeded with any device under the worst probable operating conditions with respect to supply voltage variation, equipment component variation, equipment control adjustment, load variations, signal variation, environmental conditions, and variations in characteristics of the device under consideration and of all other electronic devices in the equipment.

DESIGN MAXIMUM RATING SYSTEM

Design maximum ratings are limiting values of operating and environmental conditions applicable to a bogey electronic device of a specified type as defined by its published data, and should not be exceeded under the worst probable conditions.

These values are chosen by the device manufacturer to provide acceptable serviceability of the device, taking responsibility for the effects of changes in operating conditions due to variations in the characteristics of the electronic device under consideration.

The equipment manufacturer should design so that, initially and throughout life, no design maximum value for the intended service is exceeded with a bogey device under the worst probable operating conditions with respect to supply voltage variation, equipment component variation, variation in characteristics of all other devices in the equipment, equipment control adjustment, load variation, signal variation and environmental conditions.

DESIGN CENTRE RATING SYSTEM

Design centre ratings are limiting values of operating and environmental conditions applicable to a bogey electronic device of a specified type as defined by its published data, and should not be exceeded under normal conditions.

These values are chosen by the device manufacturer to provide acceptable serviceability of the device in average applications, taking responsibility for normal changes in operating conditions due to rated supply voltage variation, equipment component variation, equipment control adjustment, load variation, signal variation, environmental conditions, and variations in the characteristics of all electronic devices.

The equipment manufacturer should design so that, initially, no design centre value for the intended service is exceeded with a bogey electronic device in equipment operating at the stated normal supply voltage.

LETTER SYMBOLS FOR RECTIFIER DIODES, THYRISTORS, TRIACS AND BREAKOVER DIODES

LETTER SYMBOLS FOR CURRENTS, VOLTAGES AND POWERS

Basic letters: — The basic letters to be used are:

I, i = current V, v = voltage P, p = power

Lower-case basic letters shall be used for the representation of instantaneous values which vary with time. In all other instances upper-case letters shall be used.

Subscripts

amb	Ambient
(AV), (av)	Average value
(BO)	Breakover
(BR)	Breakdown
case	Case
C	Controllable
D,d	Forward off-state [1]), non-triggered (gate voltage or current)
F,f	Forward [1]), fall
G,g	Gate terminal
H	Holding
I,i	Input
J,j	Junction
L	Latching
M,m	Peak or crest value
min	Minimum
O,o	Output, open circuit
(OV)	Overload
P,p	Pulse
Q,q	Turn-off
R,r	As first subscript: reverse, rise As second subscript: repetitive, recovery
(RMS), (rms)	R.M.S. value
S,s	As first subscript: storage, stray, series, source, switching As second subscript: non-repetitive
stg	Storage
T,t	Forward on-state [1]), triggered (gate voltage or current)
th	Thermal
(TO)	Threshold
tot	Total
W	Working
Z	Reference or regulator (i.e. zener)

For power rectifier diodes, thyristors and triacs, the terminals are **not** indicated in the subscript, except for the gate-terminal of thyristors and triacs.

---

[1]) For the anode-cathode voltage of thyristors and triacs, F is replaced either by D or T, to distinguish between 'off-state' (non-triggered) and 'on-state' (triggered).

Example of the use of letter symbols

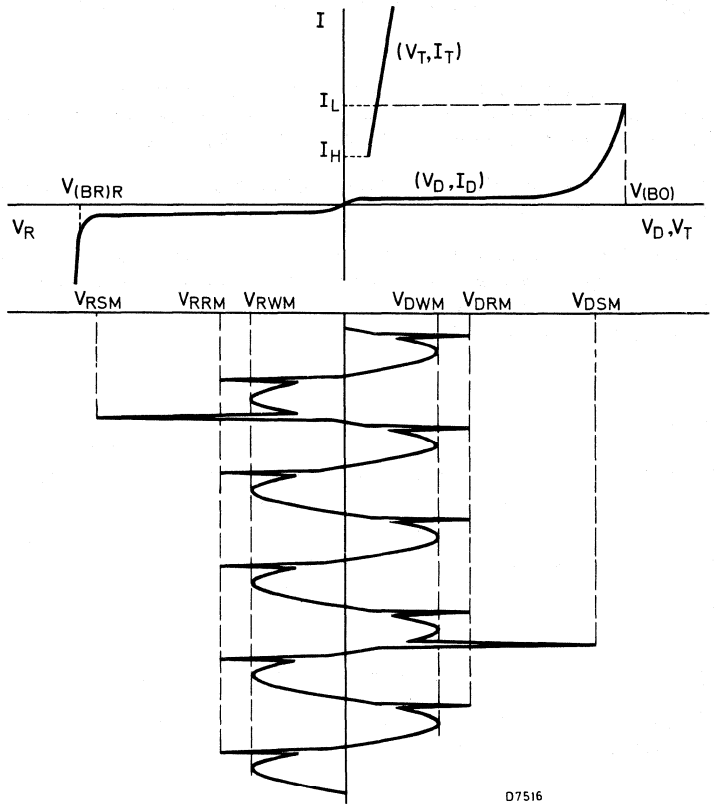

Simplified thyristor characteristic together with an anode-cathode voltage as a function of time (no gate signal).

QUALITY CONFORMANCE AND RELIABILITY

In addition to 100% testing of all major device parameters in the production department, independently controlled statistical sampling for conformance and reliability takes place using BS6001 'Sampling Procedures and Tables'. BS6001 is consistent with MIL–STD–105D. DEF131A, IS02859, CA–C–115.

The market demand for a continuously improving product quality is being met by the annual updating of formal quality improvement plans.

The 'Defect free' and 'Right first time' concepts are applied regularly as part of an overall quality programme covering all aspects of device quality from initital design to final production. These concepts, together with the quality assurance requirements, embrace all the principles outlined in DEF STAN 05–21, AQAP–1, and BS5750 Pt1.

CONFORMANCE

The Company actively promote a policy of customer cooperation to determine their quality problems and future requirements. This cooperation is often in the form of a 'ppm' activity. The 'ppm' is a measure of conformance of the outgoing product, and is expressed as the number of reject devices found per million of products delivered (e.g. a process average of 0.01% = 100 ppm). Mutually agreed ppm targets are set, and a programme of quality improvement work initiated.

In addition to the above, special inspection and/or test procedures are available, following consultation with the customer and the agreement of a special specification.

RELIABILITY

'Screening', or 'Burn-in' procedures are also available, based on the requirements of CECC 50 000.

CECC 50 000 offers a choice of four screening sequences: 'A', 'B', 'C', 'D'. The Company's standard 'Hi-rel' procedure offers a combination of 'C' and 'D' sequences.

Sequence 'C'

1. High temperature storage – 24 hours minimum.
2. Rapid change of temperature – as detailed in agreed specification.
3. Sealing – fine leak test.
   – gross leak test.
4. Functional electrical characteristics – within group 'A' limits.

Sequence 'D'

1. 'Burn-in' – high-voltage reverse bias, 48 hours duration. Conditions as specified in CECC 50 000.
2. Post 'Burn-in' measurements – functional electrical characteristics, within group 'A' limits.

Other 'Hi-rel', 'Burn-in', or 'Screening' procedures may be available on request.

THYRISTORS AND TRIACS

SWITCHING CHARACTERISTICS

Thyristors and triacs are not perfect switches. They take a finite time to go from the off to the on-state and vice-versa. At frequencies up to about 400 Hz these effects can often be ignored, but in many applications involving fast switching action the departure from the ideal is important.

Gate-controlled turn-on time

Anode current does not commence flowing at the instant the gate current is applied.
There is a period which elapses between the application of gate current and the onset of anode current known as delay time (t_d). The rise time of anode current is known as t_r and is measured as the time taken for the anode voltage to fall from 90% to 10% of its initial value.
The conditions which need to be specified are:

a) Off-state voltage (V_D).

b) On-state current (I_T).

c) Gate trigger current (I_G) — high gate currents reduce turn-on time.

d) Rate of rise of gate trigger current (dI_G/dt) — high values reduce turn-on time.

e) Junction temperature (T_j) — high temperatures reduce turn-on time.

The waveforms are shown in the following diagram:

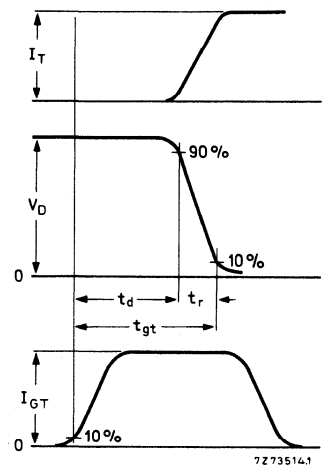

THYRISTORS

CIRCUIT-COMMUTATED TURN-OFF TIME

When a thyristor has been conducting and is reverse biased it cannot go immediately into the forward blocking state. Thyristors exhibit a stored charge in a similar fashion to rectifiers; it is only after this charge has been recombined or been swept out that the device can block reapplied off-state voltage. The turn-off time (t_q) is measured from the instant the anode current passes through zero to the instant the thyristor is capable of blocking reapplied off-state voltage.

The conditions which need to be specified are:

a) On-state current (I_T) — high peak currents mean longer turn-off times.

b) Reverse voltage (V_R) — low reverse voltages mean longer turn-off times.
An example of this is when the thyristor is in anti-parallel with a diode, limiting the reverse voltage to a volt or so.

c) Rate of fall of anode current (dI/dt) — high rates mean shorter turn-off times.

d) Rate of rise of reapplied off-state voltage (dV_D/dt) — high rates mean longer turn-off times.

e) Temperature (T_j or T_{mb}) — high temperatures mean longer turn-off times.

f) Gate conditions ($-V_{GG}$, R_{tot}) — the application of a negative gate voltage during reverse recovery can be used to reduce the turn-off time. Care must be taken not to exceed the reverse gate voltage rating (V_{RGMmax}).

The waveforms are shown in the following diagram:

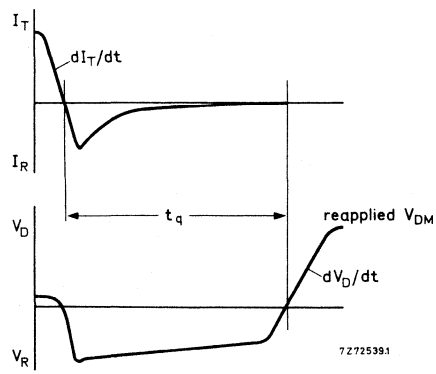

TRIACS

COMMUTATION dV_{com}/dt

When a triac has been conducting current in one direction and is then required to block voltage in the other, it is faced with a difficult task. Reverse recovery current adds to the capacitive current from the reapplied dV_D/dt in such a fashion that the device's ability to withstand high rates of reapplication of voltage is impaired. For this reason the commutation dV_D/dt is invariably worse than the static dV_D/dt.

The conditions which need to be specified are:

a) R.M.S. current ($I_{T(RMS)}$) – high currents make commutation harder.

b) Re-applied off-state voltage (V_D), normally V_{DRM} max. – high voltage will make commutation harder.

c) Temperature (T_j or T_{mb}) – high temperatures make commutation harder.

d) $-dI/dt$ – high rates of change make commutation harder.

The waveforms are shown in the following diagram:

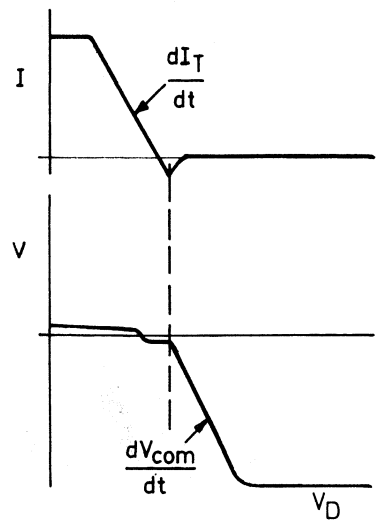

THYRISTORS

OPERATING NOTES

When there is a possibility that transients, due to the energy stored in the transformer, will exceed the maximum permissible non-repetitive peak reverse voltage, a damping circuit should be connected across the transformer.
Either a series RC circuit or a voltage dependent resistor may be used. Suitable component values for an RC circuit across the transformer primary or secondary may be calculated as follows:

$\frac{V_{RSM}}{V_{RWM}}$	RC across primary of transformer		RC across secondary of transformer	
	C (μF)	R (Ω)	C (μF)	R (Ω)
2.0	$200\frac{I_{mag}}{V_1}$	$\frac{150}{C}$	$225\frac{I_{mag}T^2}{V_1}$	$\frac{200}{C}$
1.5	$400\frac{I_{mag}}{V_1}$	$\frac{225}{C}$	$450\frac{I_{mag}T^2}{V_1}$	$\frac{275}{C}$
1.25	$550\frac{I_{mag}}{V_1}$	$\frac{260}{C}$	$620\frac{I_{mag}T^2}{V_1}$	$\frac{310}{C}$
1.0	$800\frac{I_{mag}}{V_1}$	$\frac{300}{C}$	$900\frac{I_{mag}T^2}{V_1}$	$\frac{350}{C}$

where I_{mag} = magnetising primary r.m.s. current (A)

V_1 = transformer primary r.m.s. voltage (V)

V_2 = transformer secondary r.m.s. voltage (V)

T = V_1/V_2

V_{RSM} = the transient voltage peak produced by the transformer

V_{RWM} = the actually applied crest working reverse voltage

The capacitance values calculated from the above table are minimum values; to allow for circuit variations and component tolerances, larger values should be used.

GATE TURN-OFF THYRISTORS

INTRODUCTION

The gate turn-off thyristor (GTO) is a three-junction bistable semiconductor switch for controlling current flow (the circuit symbol for the GTO is shown in Fig.1). Like a conventional thyristor, it can block a high-level forward voltage while in the off-state, and can pass a peak current far in excess of its rated average current when in the on-state. Unlike an ordinary thyristor, however, it can be turned off by the extraction of reverse current from the gate. In this respect it is similar to a high-voltage transistor, and combines the most desirable properties of both types of device.

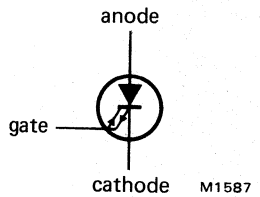

Fig.1 GTO circuit symbol.

FORWARD CHARACTERISTICS

Forward blocking

When the gate is held at or below the potential of the cathode, the GTO is in its forward blocking (off) state, with a low leakage current flowing between anode and cathode.
Four different anode to cathode voltage ratings are given in each GTO data sheet, and are defined as follows:

V_{DSM} the non-repetitive transient voltage.

V_{DRM} the repetitive peak voltage, with a short duty cycle (less than 5%).

V_{DW} the crest working voltage, which is the repetitive peak voltage with a duty cycle of up to 50%.

V_D the continuous d.c. anode to cathode voltage for the required life at maximum junction temperature.

These ratings are interpreted in Fig.2 for two different types of application:

Forward blocking (cont)

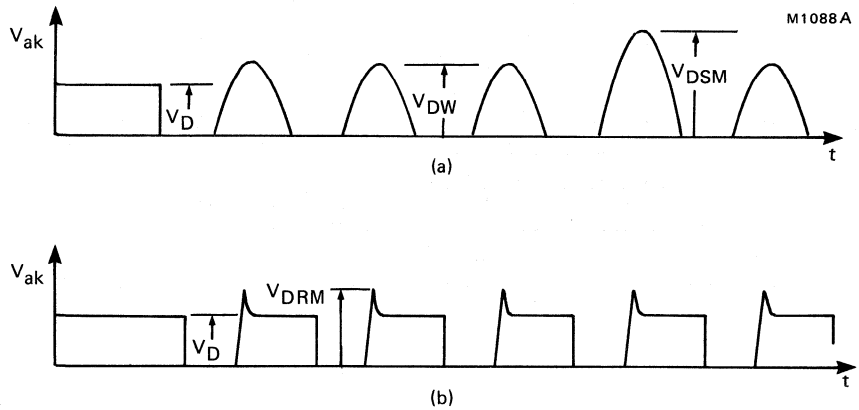

Fig.2

a) A resonant circuit such as a CRT line deflection stage or series resonant power supply.

b) A square wave circuit such as a d.c. chopper or pulse-width modulated a.c. motor control.

Forward conduction

In forward conduction the GTO has two stable states, as indicated in Fig.3. When the anode current is below the latching current I_L, the device behaves as a high-voltage transistor, with a gate-anode current amplification factor I_A/I_G which increases with increasing anode current and with increasing junction temperature. When the anode current is equal to or greater than the latching current (i.e. when the gate current has been increased above the level required to trigger the device), the GTO is in its on-state with a small potential difference between the anode and cathode. Provided the anode current does not fall below the holding level, the device will remain in the on-state even when the gate current is removed, as in a conventional thyristor. Unlike most normal thyristors, however, the on-state voltage drop (V_T) can be reduced to some extent by maintaining a forward gate current and this is indicated in data graphs of V_T versus I_T. Since the latching currents of GTOs can be relatively high (typically 10–20% of the rated average current) it may be desirable in most applications to keep forward gate current flowing at a low level while the GTO is conducting, to prevent spurious unlatching of the device.

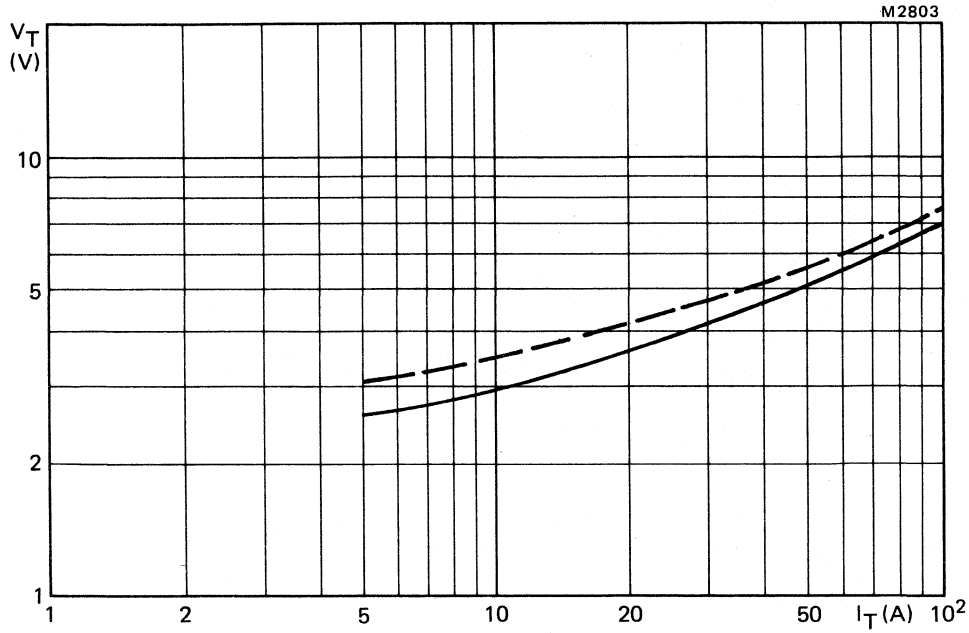

Fig.3 On-state current as a function of the on-state voltage for the BTR59 GTO.

REVERSE CHARACTERISTICS

The reverse characteristic of the GTO is equivalent to that of a resistance which is incapable of blocking voltage or conducting significant current. For d.c. switching, this does not present any problems. However, if reverse voltage blocking is required for a.c. switching, a diode must be connected in series with the GTO as shown in Fig.4. If reverse current must be allowed to flow, a diode must be connected in anti-parallel with the GTO.

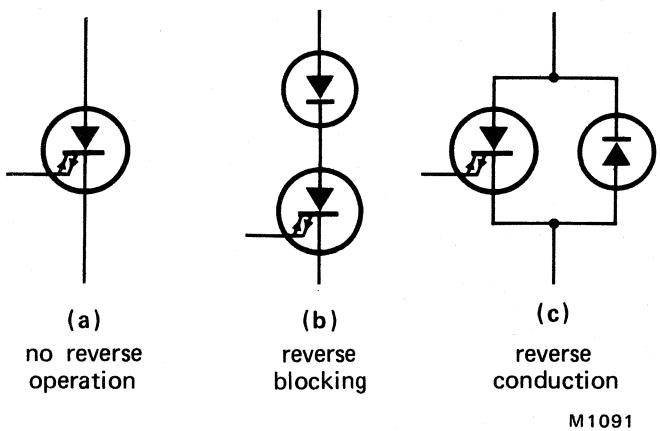

Fig.4 The use of additional diodes to change the reverse characteristic of the GTO circuit.

SWITCHING CHARACTERISTICS

Turn-on

During turn-on, care should be taken to ensure that adequate gate current is available whenever the anode current is likely to be less than the latching level. For example, Fig.5a shows that, if turn-on is achieved by discharging a capacitor into the gate of a GTO with an inductive load, too brief a time constant may cause the gate current to fall below I_{GT} before sufficient time has elapsed for the anode current to rise above the latching level. This could cause uncertain triggering. Also, if the anode current is only slightly higher than the latching level, a steep trailing edge of a positive gate pulse may cause the GTO to unlatch as shown in Fig.5b.

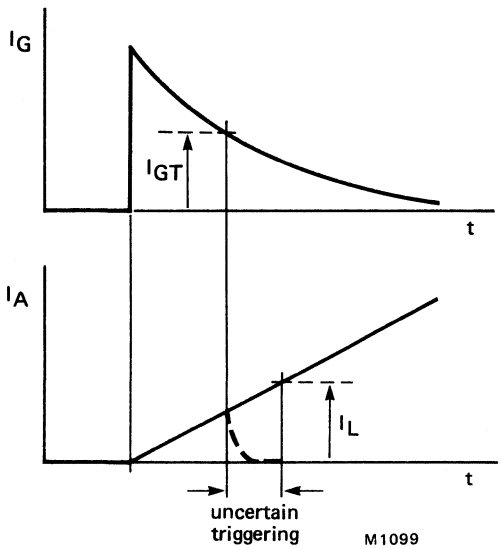

Fig.5a To ensure good triggering the anode current must rise above the latching level before the gate current falls below the minimum level required to ensure triggering.

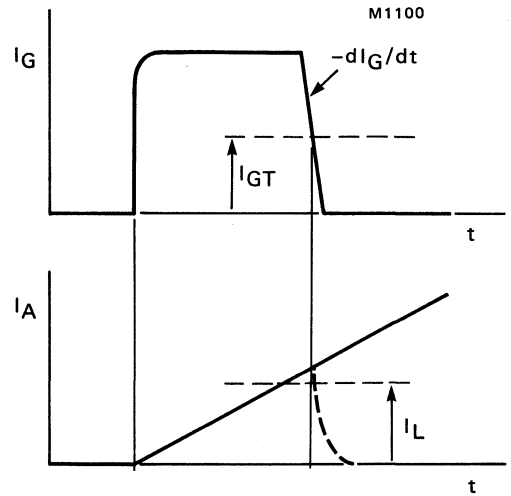

Fig.5b Unlatching can occur if the anode current is only slightly higher than the latching level during a rapid fall in gate current.

Although the value of gate current stated in data for a given junction temperature will always cause a GTO to turn on, the turn-on process may be very slow if the gate current supplied is only just greater than the trigger current of a particular device. Therefore it is usually desirable to apply an initial gate current pulse of 2–5 times the I_{GT} value given in data, to ensure fast turn-on. All turn-on times in data are defined under these conditions.

dI_T/dt limitation

Provided that sufficient gate over-drive is given at turn-on to ensure fast switching, rapid rise of anode current at turn-on (due, for instance, to the discharge of a capacitor or the reverse recovery current of a flywheel diode) will not cause any problems. This is due to the interdigitated gate-cathode structure of the device and to the fact that the rate of rise of current at turn-on is low and self-limiting until a large proportion of the device has come into conduction. The GTO can typically withstand values of turn-on dI_T/dt up to 2000A/μs.

Turn-off

As mentioned above, a major characteristic of the GTO is its ability to be turned off from the conducting state by the reverse biasing of the gate-cathode junction. However, there are several limitations which must be taken into account when designing a GTO circuit:

Controllable Anode Current, Rate of rise of Anode Voltage, and Snubber Network design.

There is a limit to the magnitude of anode current which may be interrupted, and this is dependent on the behaviour of the anode voltage during turn-off (if this current is exceeded a failure occurs which is analagous to reverse-biased second breakdown in bipolar transistors, and may result in the destruction of the device). More particularly, the controllable anode current (I_{TC}) is a function of the rate of rise of reapplied voltage (dV_D/dt). In order to take advantage of the high peak current handling capabilities of the GTO, it is normally necessary to use a form of dV_D/dt limiting network (snubber network) connected across the anode-cathode of the device. This may take the form of a capacitor connected directly across the device, or a polarised (RCD) network. However, it should be noted that the standard RC snubber as used in thyristor or ASCR circuits is not suitable for use with the GTO, because the GTO current is interrupted internally rather than by an external commutating circuit.

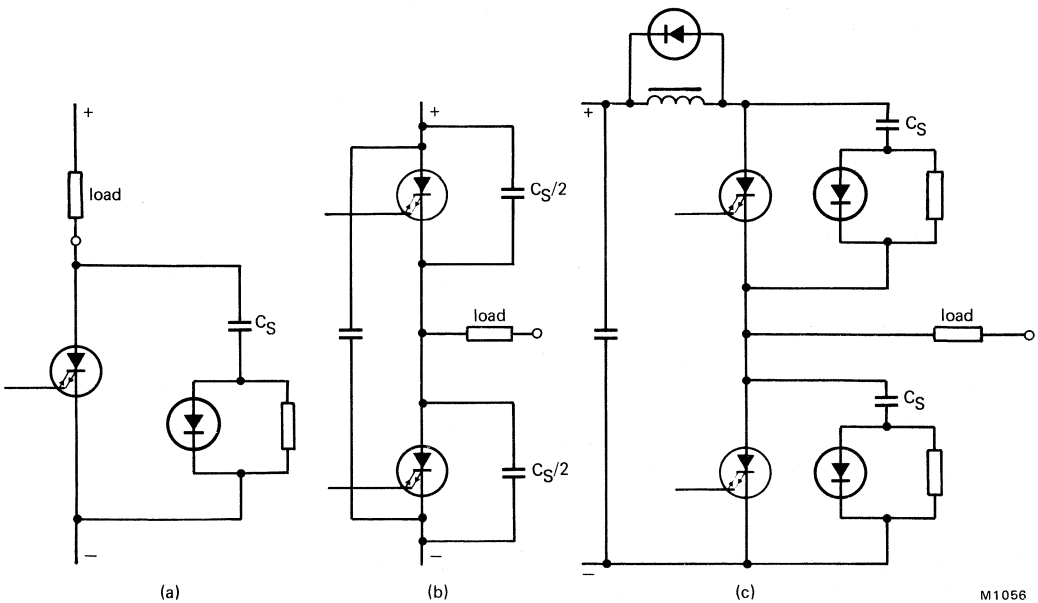

Fig.6 Snubber networks.

Fig.6 shows some examples of snubber networks which may be used in practice:

(a) Polarised (RCD) snubber for a single GTO.

(b) and (c) Simple capacitor and RCD snubbers used in a bridge configuration. Note that when using an RCD network in this circuit it is necessary to decouple the d.c. supply with an inductor to prevent the top snubber capacitor (C_S) from charging up through the bottom GTO, and vice versa.

Turn-off (cont)

In all cases, the applied dV_D/dt is defined by the equation:

$$I_T = C_S \times dV_D/dt$$

and the minimum permissible value of snubber capacitance which may be used in a particular circuit should be determined by consulting the relevant data graph of I_{TC} versus dV_D/dt. In resonant circuits, of course, dV_D/dt may be fixed by other circuit requirements.

If a simple capacitive snubber is used, the largest value of capacitance which may be connected directly across the GTO is limited by the energy dissipated in the GTO and the peak GTO anode current caused by its discharge at turn-on. Suggested maximum values (for a supply voltage equal to V_{Dmax}.) are as follows:

GTO	max. C_S
BTR59	100 nF
BTV58, BTW58	50 nF

If snubber capacitances greater than these values are required, a polarised (RCD) network should be used.

For any snubber network to be effective, the inductance in series with it (including stray inductance) must be minimised. The presence of series inductance in the snubber gives rise to an uncontrolled voltage across the device during the fall time (see the waveforms given in Fig.8). Since this is the equivalent of allowing a higher dV_D/dt, excessive inductance will reduce the value of I_{TC} below that which might be expected from a given value of snubber capacitance. Fig.7 indicates the effect this may have on controllable current for a typical device.

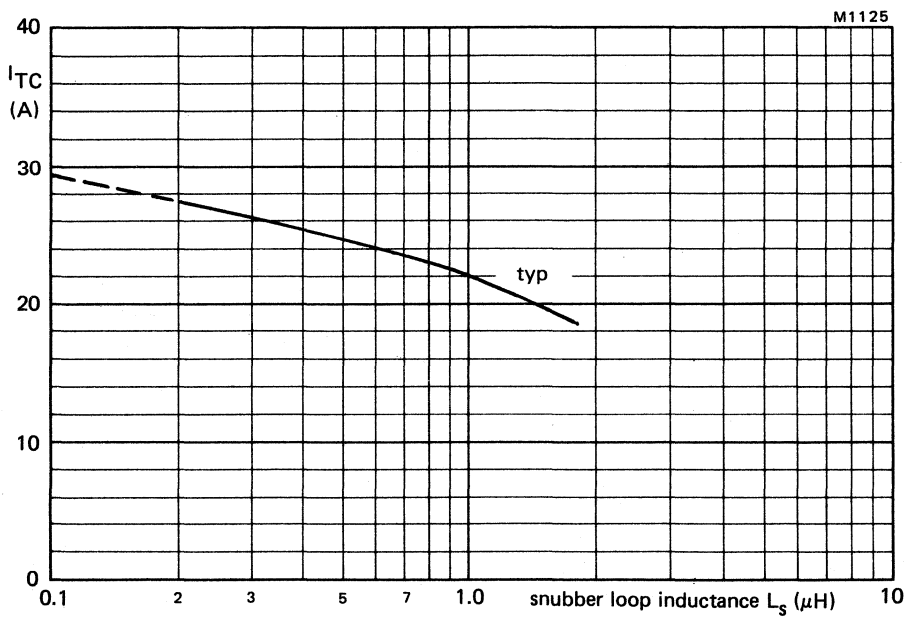

Fig.7 Typical anode current which can be turned off, as a function of snubber loop inductance for the BTR59.(C_S = 20 nF, T_{mb} = 25 °C)

When using an RCD snubber network, in which the current transferred from the GTO to the snubber capacitor must pass through the diode, care should be taken in the selection of the diode used, since (particularly in 'fast-recovery' gold-doped diodes) a high transient forward voltage can appear when the forward current through the diode is increased rapidly from zero. This voltage will have exactly the same effect as that due to stray inductance, and must be minimised. In general, the effect of snubber inductance will increase with increasing anode current and reducing dV_D/dt.
Another factor which should be taken into account when designing an RCD snubber network is the need for the snubber capacitor to be fully discharged before the device is turned off. When the GTO is turned on, the capacitor is, of course, charged up to the d.c. supply voltage, and must discharge through the snubber resistance R_S. For a supply voltage equal to the V_{Dmax} rating of the GTO, a safe period to ensure adequate discharge of the capacitor is given by:

$$t_{on} = 5 \times R_S \times C_S$$

where t_{on} is in microseconds, R_S is in ohms and C_S is in microfarads.

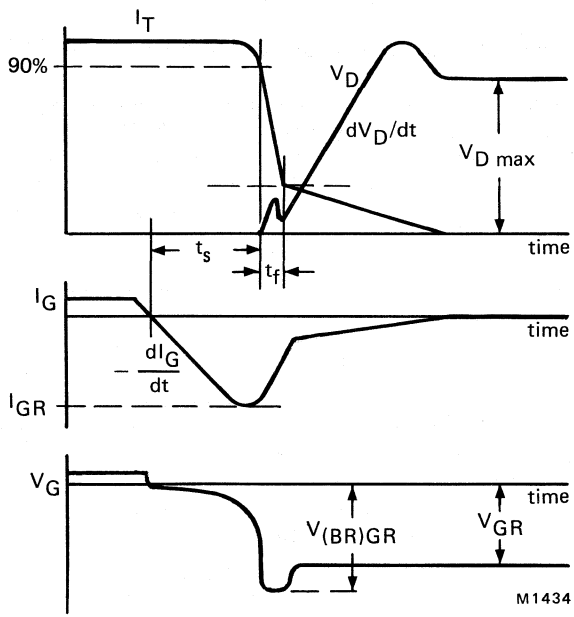

Fig.8 Typical turn-off waveforms.

Gate circuit design

The amount of current a GTO can turn off is dependent on the performance of the gate drive circuit used, as well as the factors mentioned above. Essentially, the gate drive circuit consists of two distinct parts: a forward current source which provides gate current while the device is on, and a negative voltage source which is connected across the gate-cathode through a low impedance at turn-off. An idealised version of this is shown in Fig.9.

Gate circuit design (cont)

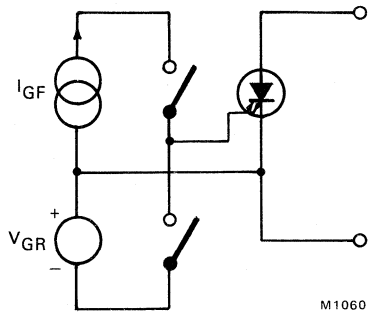

Fig.9 Idealised gate circuit.

The gate-cathode junction of a GTO may be regarded as a zener diode with a reverse breakdown voltage greater than that specified in the data sheet, so that, provided the negative voltage source does not exceed this voltage, no significant current will flow once the turn-off process is completed and the device is in the off state. During turn-off (see Fig.8) however, a current with a peak value of I_{GR} will flow. The ratio I_A/I_{GR} is known as the 'turn-off gain' of the device, and may vary from <1 to 3–4, depending on the current being turned off (each data sheet gives the maximum value of I_{GR} which might be expected, as a function of anode current). The rate at which the negative gate current rises during the storage period of turn-off ($-dI_G/dt$) is controlled by the impedance in the gate circuit. In practice this should be kept to a minimum, but a certain amount of wiring inductance is unavoidable, and is not detrimental to turn-off performance provided it is kept below the maximum limit given in each data sheet. Series resistance in the negative gate current path should be minimised, and this generally implies the use of a low-voltage fast-switching bipolar or power MOS device to switch the gate to a negative voltage. An example of a practical gate drive circuit (for the BTR59) is shown in Fig.10.

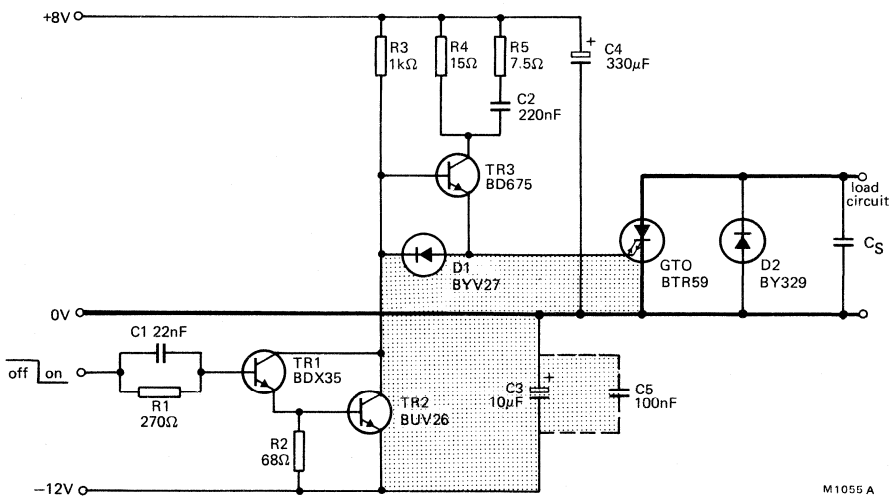

Fig.10 Practical drive circuit suitable for a BTR59. The turn-off loop (shaded) should have minimum inductance, and the small decoupling capacitor (shown in dashed lines), should be wired as close as possible to the electrolytic capacitor.

Forward gate drive is provided by TR3, with an initial gate pulse being supplied via R5/C2. The discrete Darlington pair TR1/TR2 switches the gate to the −12 V rail, resulting in a negative gate voltage (V_{GR}) of approx. 10 V when the V_{CEsat} of TR2 is taken into account.
For smaller devices, such as the BTV58 and the BTW58, a simpler gate circuit (as shown in Fig.11) may be adequate.

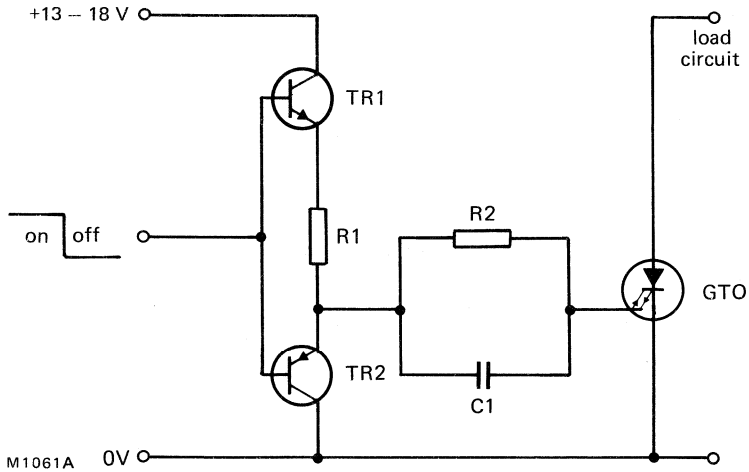

Fig.11 Simple gate circuit

The capacitor C1 is charged during the GTO on-time, and can then be used to supply the negative gate voltage to turn off the GTO. The capacitor must be large enough to ensure that the negative gate current pulse which occurs at turn-off does not discharge the capacitor by more than about 1 V, and must also be charged up adequately the first time the GTO is switched on.
It is recommended that wherever possible, full advantage should be taken of the guaranteed reverse breakdown voltage of the gate-cathode junction so that the maximum possible negative drive voltage is used. However, if this voltage is limited by other considerations to a lower value, due attention should be paid to the relevant data graph to ensure the maximum controllable current is not exceeded, since I_{TC} falls with reducing V_{GR}.
It should be noted that in most practical gate drives the gate-cathode junction is normally driven into reverse avalanche conduction for a short time while the negative gate current falls from its peak value back to zero (see Fig.8). Because of its interdigitated structure, the junction is capable of withstanding high avalanche currents for short periods without sustaining damage, so this does not cause a problem.

SAFE OPERATING AREA (SOAR)

Forward-biased SOAR

Since the GTO is a regenerative device it does not have forward-biased SOAR limitations in the same way as a bipolar transistor. Peak on-state current is limited by the capabilities of the connecting wires and the thermal capacity of the crystal, and is stated in data as a maximum non-repetive surge current limit in the same way as an ordinary thyristor.

Reversed-biased SOAR

For any particular applied dV_D/dt the GTO is capable of turning off the current given by the data graph of I_{TC} versus dV_D/dt up to the full rated V_{DRM} of the device. The RB SOAR curve is therefore a rectangle bounded by I_{TC} and V_{DRM}.

SWITCHING LOSSES

When the GTO is switched from the off- to the on-state and vice versa, there is a loss of energy resulting from the simultaneous presence of high voltage and high current during switching. The average power loss resulting from this may or may not be significant, depending on the frequency of operation. The switching losses are dependent on the operating conditions and must be considered when a circuit is being designed.

Turn-on Losses

The energy loss at turn-on can be estimated from the equation:

$$E_{on} = V_D \times I_T \times t_r \times 1/6$$

where E_{on} is in microjoules, V_D is the voltage from which the GTO is being turned on, I_T is the current being turned on to, and t_r is the rise time in microseconds. These losses can clearly be minimised by ensuring fast turn-on with an initial high gate current pulse.

Turn-off Losses

At turn-off, switching losses are almost completely due to the small 'tail current' which flows after the anode voltage has begun to rise (see Fig.8). Turn-off losses are a function of anode current, applied dV_D/dt, and junction temperature. Each data sheet includes graphs which can be used to calculate losses given these conditions.

LOW-PROFILE TO-220 OUTLINES (SOT-226/SOD-94)

Low-profile versions of most devices assembled in either TO-220AB or TO-220AC are available. These outlines are designated SOT-226 (low-profile TO-220AB) or SOD-94 (low-profile TO-220AC). Devices assembled in these outlines have the same electrical ratings and characteristics as the TO-220 versions and are suitable for free-air mounting on circuit boards with limited clearance.

MECHANICAL DATA Dimensions in mm

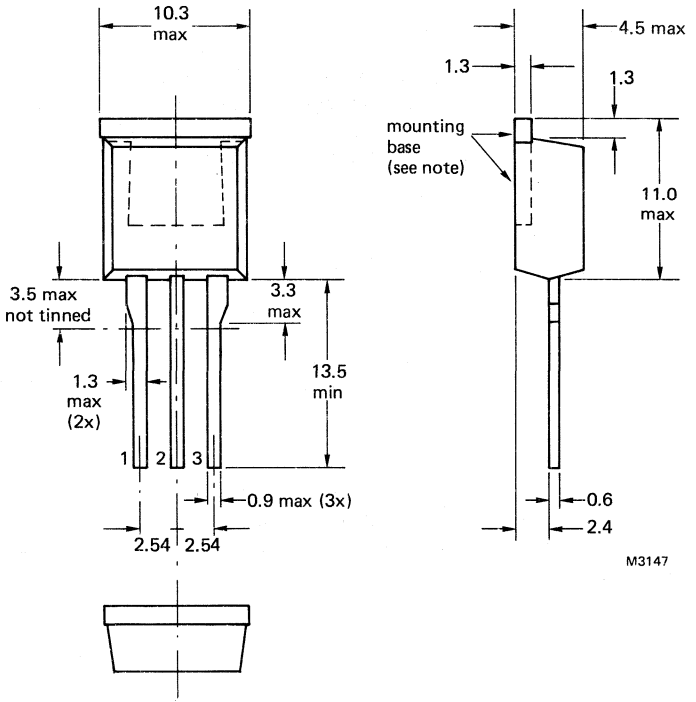

Fig.1 SOT-226, low-profile version of TO-220AB.

Net mass: 1.5 gram
Note: The exposed metal mounting base is directly connected to terminal 2.

MECHANICAL DATA (Cont) Dimensions in mm

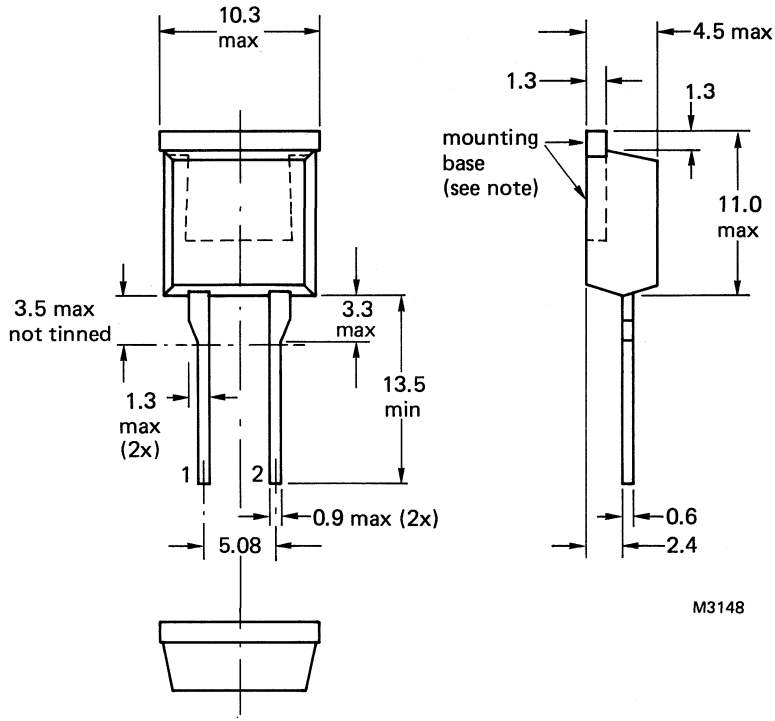

Fig.2 SOD-94, low-profile version of TO-220AC.

Net mass: 1.5 gram
Note: The exposed metal mounting base is directly connected to terminal 1.

DESIGNATION OF LOW-PROFILE DEVICES

Low-profile versions of devices types are identified by a /CR suffix added to the normal TO-220 device type code.

Example: To identify a BT151-650R in a low-profile outline.
This becomes the BT151-650R/CR in SOT-226.

The low-profile device type will have the same electrical ratings and characteristics as the TO-220 type.

MOUNTING INSTRUCTIONS

1. The lead soldering instructions for low-profile devices are the same as TO-220 devices, for details see data-sheet Mounting Instructions for TO-220 Envelopes.
2. Low-profile TO-220 outlines may be clip-mounted onto a heatsink using clips, part number 56363 (for direct mounting) or 56366 (for insulated mounting). Clip mounting is the same as TO-220 envelopes, for details see data-sheet Mounting Instructions for TO-220 Envelopes.

THERMAL RESISTANCE DATA

From junction to mounting base:
see TO-220 device type data.

Influence of mounting method:

1. Heatsink-mounted with clip

Thermal resistance from mounting base to heatsink

a. with heatsink compound	$R_{th\ mb\text{-}h}$	=	0.3	K/W
b. with heatsink compound and 0.06 mm maximum mica insulator	$R_{th\ mb\text{-}h}$	=	1.4	K/W
c. with heatsink compound and 0.1 mm max. mica insulator	$R_{th\ mb\text{-}h}$	=	2.2	K/W
d. with heatsink compound and 0.25 mm max. alumina insulator	$R_{th\ mb\text{-}h}$	=	0.8	K/W
e. without heatsink compound	$R_{th\ mb\text{-}h}$	=	1.4	K/W

2. Free-air operation

The quoted value of $R_{th\ j\text{-}a}$ should be used only when no leads of other dissipating components run to the same tie-point.

Thermal resistance from junction to ambient in free air: mounted on a printed-circuit board at any lead length	$R_{th\ j\text{-}a}$	=	75	K/W

Semiconductors in SOT223 encapsulations are delivered in reel packing for automatic placement on hybrid circuits and printed-circuit boards. The devices are placed with the mounting side downwards in compartments.

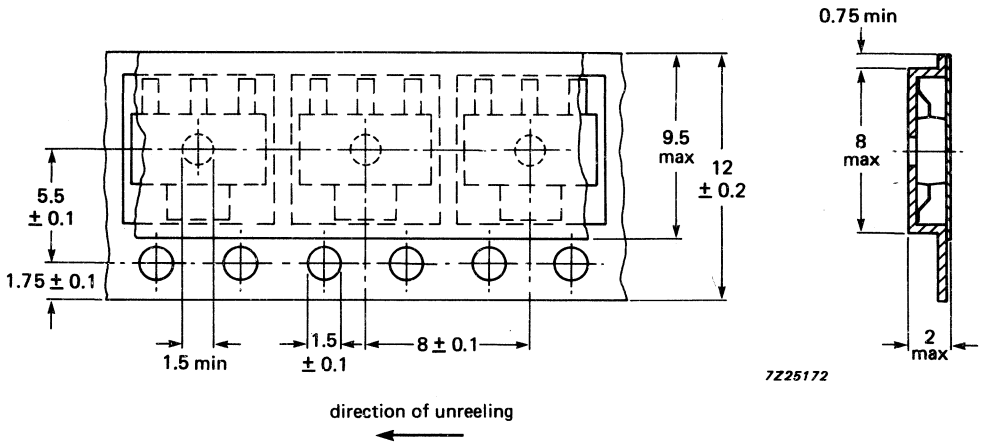

Fig. 1 Configuration of bandolier. Dimensions in mm.

SOLDERING RECOMMENDATIONS

SMD devices are ideally suited for placement onto thick and thin film substrates and printed boards.

To assure reliable and consistent connections particular attention should be paid to:

1. **Flux**

   A non-active flux is recommended. Where active fluxes are employed, great care in subsequent substrate cleaning must be exercised.

2. **Metal-alloy solder or solder paste**

   Correct choice of solder alloy or solder paste to be employed e.g. 62% Sn, 36% Pb, 2% Ag or 60% Sn/40% Pb. Any paste used should contain at least 85% metal dry weight.

3. **Soldering temperature**

   This will vary according to the actual method employed.

REFLOW SOLDERING

The preferred techique for mounting microminiature components on hybrid thick and thin-film is the method of reflow soldering.

The tags of SOT223 envelopes are pre-tinned and the best results are obtained if a similar solder is applied to the corresponding soldering areas on the substrate. This can be done by either dipping the substrate in a solder bath or by screen printing a solder paste.

The maximum temperature of the leads or tab during the soldering cycle should not exceed 285 °C. The most economic method of soldering is a process in which all different components are soldered simultaneously for example SOT23, SOT143, SOT223 or SOT89 devices, capacitors and resistors.

Having first been fluxed, all components are positioned on the substrate. The slight adhesive force of the flux is sufficient to keep the components in place. Solder paste contains a flux and has therefore good inherent adhesive properties which eases positioning of the components.

With the components in position the substrate is heated to a point where the solder begins to flow. This can be done on a heating plate or on a conveyor belt running through an infrared tunnel. The maximum allowed temperature of the plastic body of a device must be kept below 280 °C during the soldering cycle. For further temperature behaviour during the soldering process see Figs 2 and 3.

The surface tension of the liquid solder tends to draw the tags of the device towards the centre of the soldering area and has thus a correcting affect on slight mispositionings. However, if the layout leaves something to be desired the same effect can result in undesirable shifts; particularly if the soldering areas on the substrate and the components are not concentrally arranged. This problem can be solved using a standard contact pattern, which leaves sufficient scope for the self-positioning effect (see Figs 4 to 9).

After cooling the connections may be visually inspected and, where necessary, repaired with a light soldering iron. Finally any remaining flux must be removed carefully.

WAVE SOLDERING

The normal (dual) wave soldering process can also be applied to SOD80, SOT23, SOD87, SOT223 and SOT143 envelopes. We do not recommend SOT89 to be used with wave soldering process.

IMMERSION SOLDERING

Where a complete substrate or printed circuit board is immersed in solder:

a. The temperature of the soldering bath should not exceed 280 °C.
b. The duration of the soldering cycle should not exceed 10 seconds.
c. Forced cooling may be applied (see Fig. 1).

HAND SOLDERING

It is possible to solder microminiature devices with a light hand-held soldering iron, but this method has obvious drawbacks and should therefore be restricted to laboratory use and/or incidental repairs on production circuits.

1. It is time-consuming and expensive.
2. The device cannot be positioned accurately and therefore the connecting tags may come into contact with the substrate and damage it.
3. There is a great risk of breaking either substrate or even internal connections inside the encapsulation.
4. The envelope may be damaged by the iron.

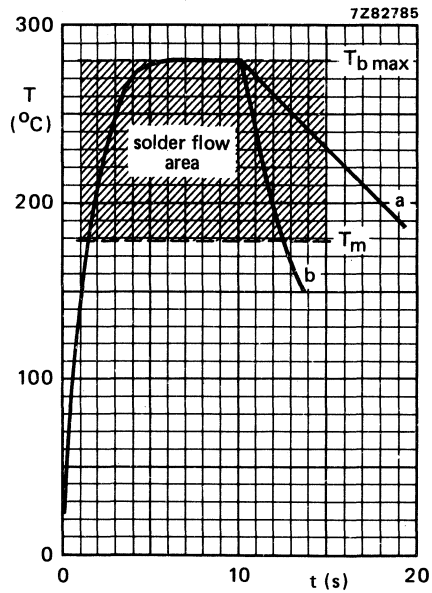

Fig.1 Device temperature during *immersion* soldering.

Maximum time of immersion in soldering bath is 10 seconds at an ambient temperature of 25 °C.

a = free convection cooling; b = forced cooling.
$T_{b\,max}$ = maximum bath temperature (280 °C).
T_m = melting temperature of solder (179 °C).

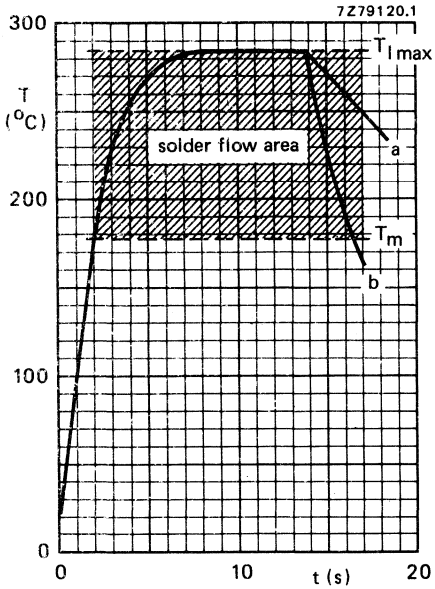

a = free convection cooling

b = permissible forced cooling

$T_{l\,max}$ = maximum lead or tab temperature = 285 °C

T_m = melting point of the solder is 179 °C

T_{amb} = 25 °C

Time of heat supply:
without preheating max. 14 s
with preheating max. 10 s

Maximum time of preheating 45 s

Fig.2 Reflow soldering without preheating.

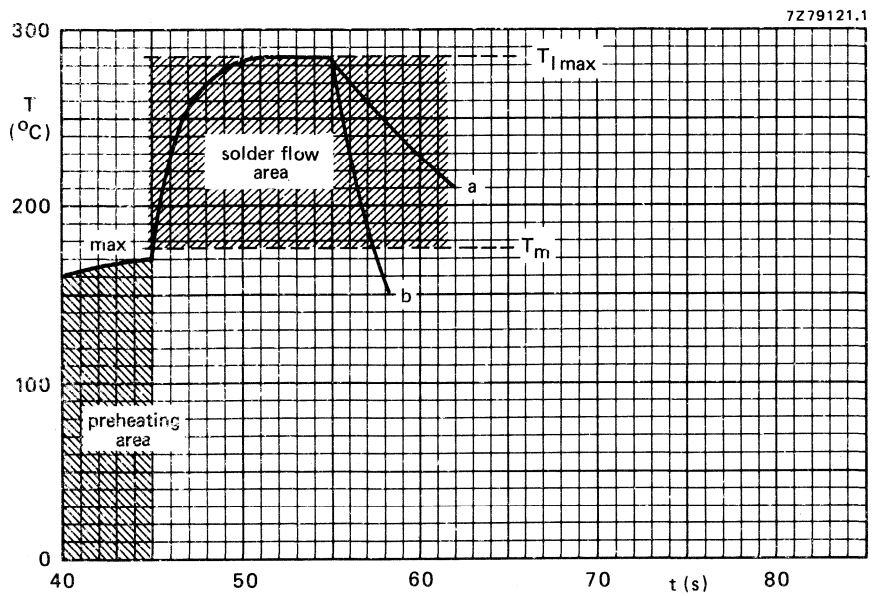

Fig.3 Reflow soldering with preheating.

Minimum required dimensions of metal connection pads on hybrid thick and thin-film substrates.

Dimensions in mm

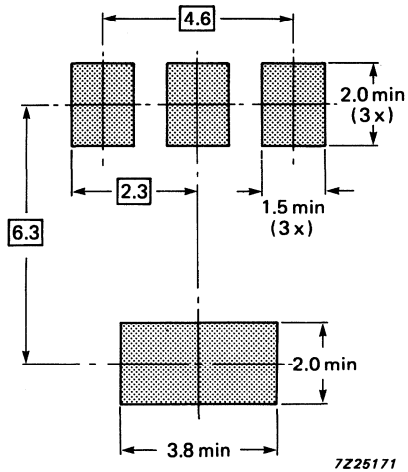

Fig.4 SOT223 pattern.

THERMAL CHARACTERISTICS

The heat generated in a semiconductor chip normally flows by various paths to the surroundings (ambient).

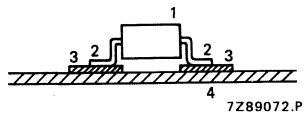

Fig.1.

1. Heat radiation from the envelope to ambient (1).
   This heat transfer can be neglected when the envelope is mounted on a substrate or printed board.
2. Heat transmission via leads (2) soldering points (3) and substrate (4).

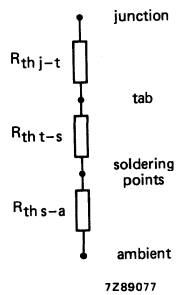

Fig.2 Thermal behaviour of heat flow when the device is mounted on a substrate or printed board.

$R_{th\,j\text{-}t}$ = Thermal resistance from junction to tab.

$R_{th\,t\text{-}s}$ = Thermal resistance from tab to soldering points.

$R_{th\,s\text{-}a}$ = Thermal resistance from soldering points to ambient.

USING THE SOT223

For a given device in the SOT223 package, the data sheet quotes a value of junction to ambient thermal resistance for the device mounted on the standard SOT223 test board. This test board is standard copper clad epoxy printed circuit board (1 oz FR4), 40 mm * 40 mm * 1.5 mm, with a minimum collector tab mounting pad area of 6 cm^2. The value of junction to ambient thermal resistance quoted, $R_{th\ j-a}$, is 70 K/W.

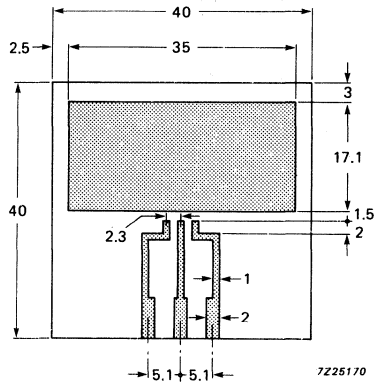

Fig. 3 Test circuit for SOT223.

Thermal measurements show that using the same test board layout with copper clad paper board as the substrate material, gives the same thermal resistance values as 1 oz FR4 regardless of collector tab mounting pad area. If 2 oz copper clad epoxy board is used then the thermal resistance values are all reduced. As expected, reducing the area of the collector pad increases the thermal resistance.

These relationships are shown more clearly in the graph below.

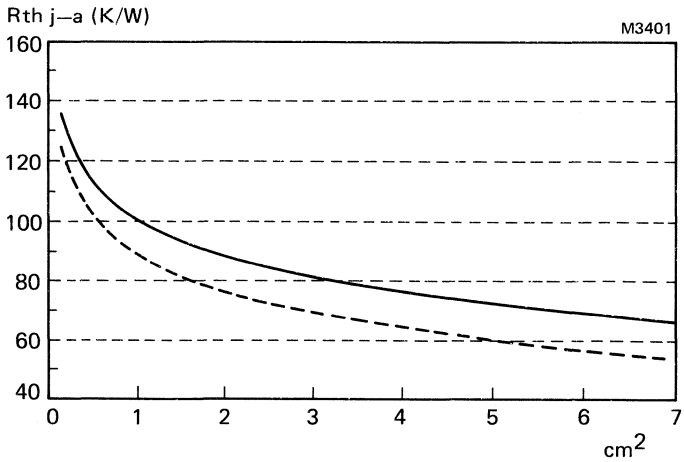

Fig. 4 Collector Pad Copper Area.

1 oz FR4 2 oz FR4

The mass of solder around the device legs also affects $R_{th\ j-a}$. To take account of this all measurements have been done with the devices mounted using a minimum amount of solder paste and soldered using a hot air reflow soldering technique. Thus the results given are worst case $R_{th\ j-a}$ values.

So for example, supposing a SOT223 device was to be mounted on copper clad paper board with a collector tab mounting pad area of 3 cm^2. The thermal resistance, $R_{th\ j-a}$, would therefore be no greater than 80 K/W, because copper clad paper board gives the same thermal resistance values as 1 oz copper clad epoxy board (1 oz FR4).

Thermal measurements have also been done of SOT223 devices mounted on copper clad aluminium board. Using a board 40 mm * 40 mm and the minimum landing pad areas (collector pad area of 2 mm * 3.8 mm) the worst case thermal resistance is 55 K/W.

TO-92 VARIANT DEVICES ON TAPE

MECHANICAL DATA

Dimensions in mm

Fig. 1 (see table below).

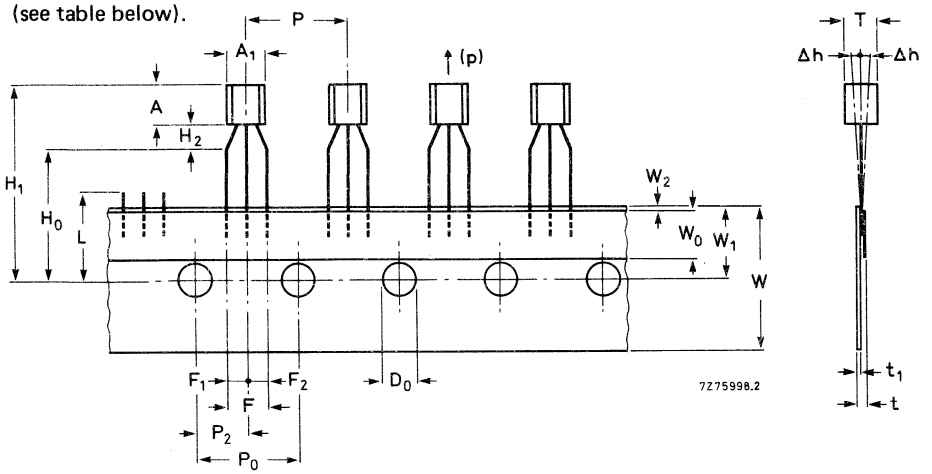

Item	Symbol	Specifications min.	nom.	max.	tol.	Remarks
Body width	A_1	4,0		4,8		
Body height	A	4,8		5,2		
Body thickness	T	3,9		4,2		
Pitch of component	P		12,7		± 1	
Feed hole pitch	P_o		12,7		± 0,3	Cumulative pitch error 1,0 mm/20 pitch
Feed hole centre to component centre	P_2		6,35		± 0,4	To be measured at bottom of clinch
Distance between outer leads	F		5,08		+ 0,6 −0,2	
Component alignment	Δh		0	1		At top of body
Tape width	W		18		± 0,5	
Hold-down tape width	W_o		6		± 0,2	
Hole position	W_1		9		+ 0,7 −0,5	
Hold-down tape position	W_2		0,5		± 0,2	
Lead wire clinch height	H_o		16		± 0,5	
Component height	H_1			32,25		
Length of snipped leads	L			11,0		
Feed hole diameter	D_o		4		± 0,2	
Total tape thickness	t			1,2		t_1 0,3-0,6
Lead-to-lead distance	F_1, F_2		2,54		+ 0,4 −0,1	
Clinch height	H_2			3		
Pull-out force	(p)	6N				

PACKING

The devices are supplied on tape in boxes (ammopack) or on reels. The number per reel is 1600 and per ammobox 2000*.

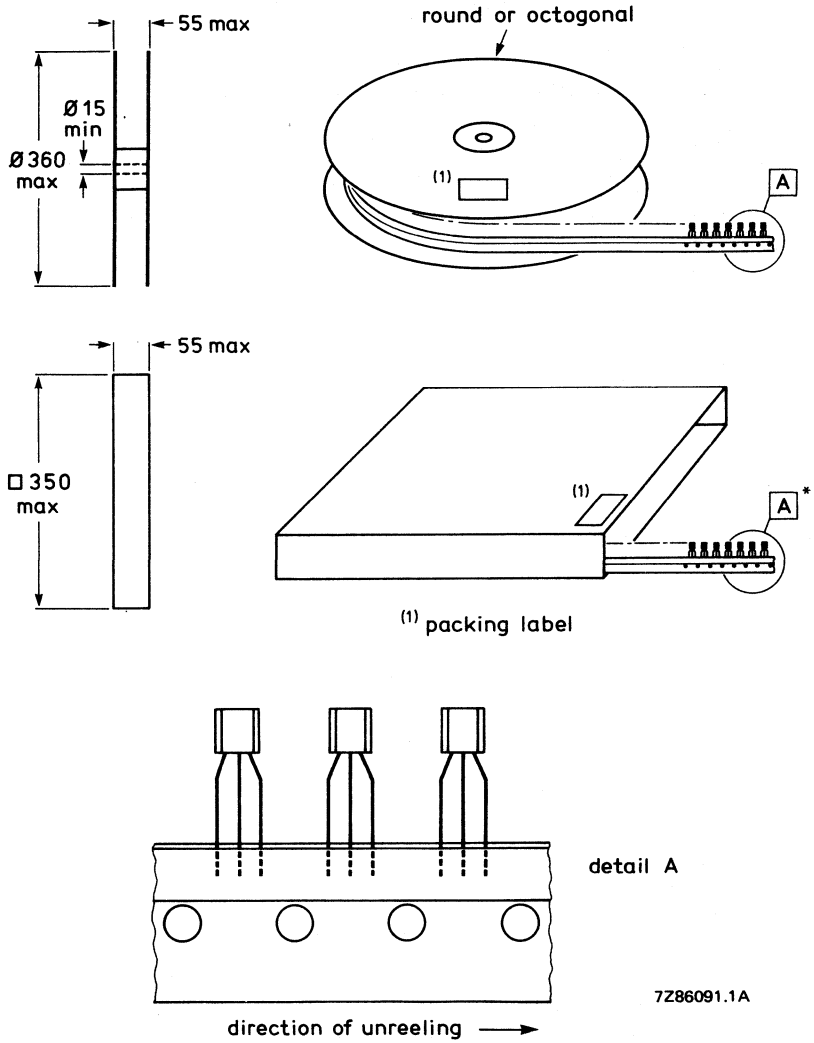

Fig. 2 Dimensions (in mm) of reel and box.

DROPOUTS

A maximum of 0.5% of the specified number of devices in each packing may be missing. Up to 3 consecutive components may be missing provided the gap is followed by 6 consecutive components.

TAPE SPLICING

Slice the carrier tape on the back and/or front so that the feed hole pitch (P_0) is maintained (see Fig. 3).

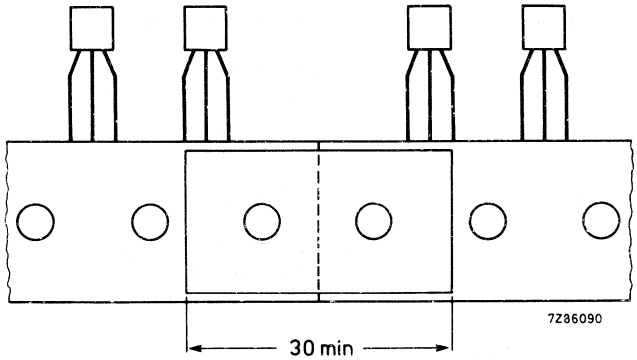

Fig. 3 Jointing tape with splicing patch.

* The ammobox has 80 layers of 25 devices each.
Each layer contains 25 devices plus one empty position in order to fold the layer correctly.

The ammobox is accessible from both sides enabling the user to choose between "normal" (see Fig.2) and "reverse" tape.

Thermal resistance of flat heatsinks of 2 mm copper or 3 mm aluminium.
The graphs are valid for the combination of device and heatsink.

Studs: 10-32UNF
Mounting bases, across the flats: max. 11,0 mm

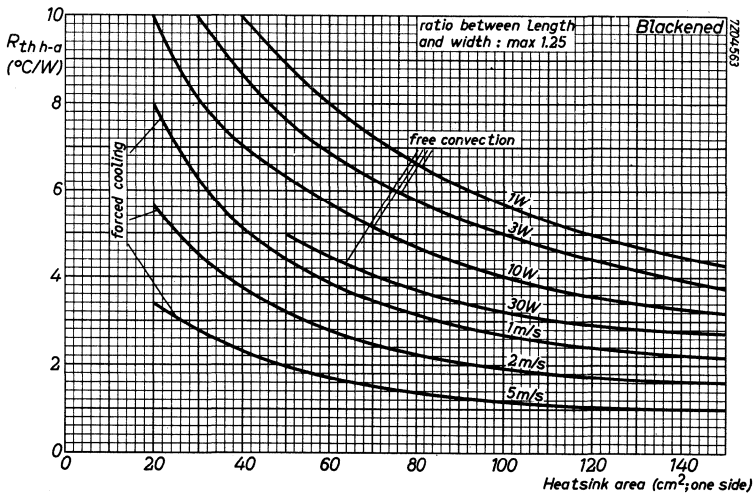

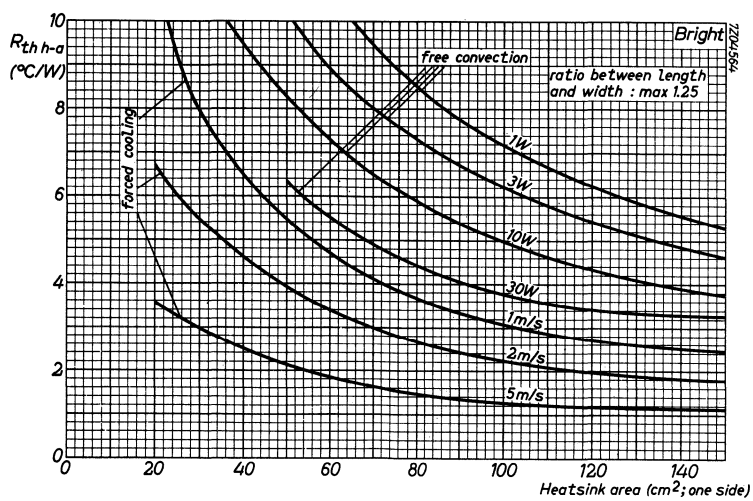

Thermal resistance of flat heatsinks of 2 mm copper or 3 mm aluminium.
The graphs are valid for the combination of device and heatsink.

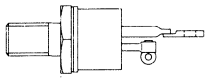

Stud: M6 ; ¼" x 28 UNF
Mounting base across the flats: max. 14.0 mm

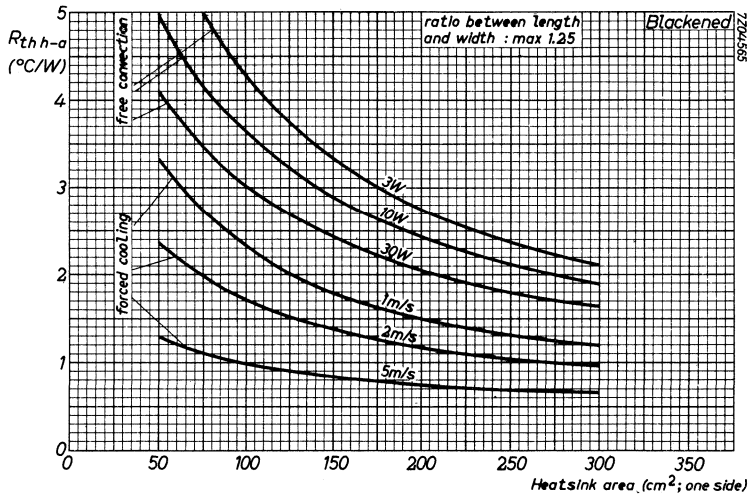

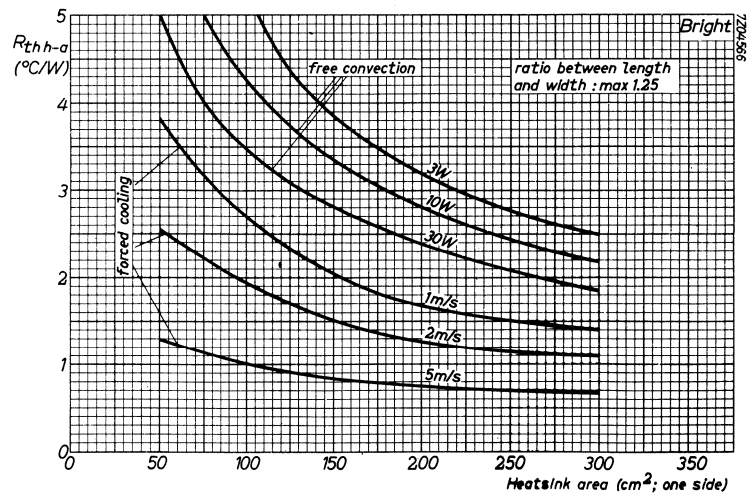

DEVICE DATA

SILICON BI-DIRECTIONAL TRIGGER DEVICE

Silicon bi-directional trigger device intended for use in triac and thyristor trigger circuits.

QUICK REFERENCE DATA

Breakover voltage	$V_{(BO)}$		28 to 36	V
Output voltage	V_O	>	5	V
Repetitive peak current	I_{FRM}	max.	2	A

MECHANICAL DATA

Dimensions in mm

Fig. 1

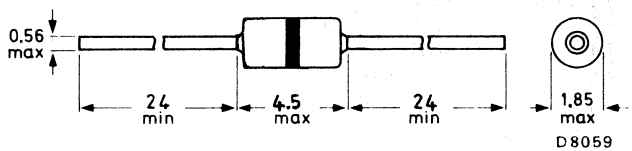

RATINGS

Limiting values in accordance with the Absolute Maximum System (IEC134)

Total power dissipation up to T_{amb} = 50 °C	P_{tot}	max.	150	mW
Repetitive peak current ($t \leqslant 20\ \mu s$)	I_{FRM}	max.	2	A
Storage temperature	T_{stg}		−55 to +125	°C
Junction temperature	T_j	max.	100	°C

THERMAL RESISTANCE

From junction to ambient in free air	$R_{th\ j\text{-}a}$	=	0.33	K/mW

CHARACTERISTICS

$T_j = 25\ ^oC$

Breakover voltage at $\frac{dV}{dt} = 10$ V/ms	$V_{(BO)}$		28 to 36	V
Breakover voltage symmetry	$\lvert V_{(BO)I} - V_{(BO)III} \rvert$	<	3	V
Output voltage at $\frac{dV}{dt} = 10$ V/ms	V_O	>	5	V
Breakover current at $V = 0.98\ V_{(BO)}$	$I_{(BO)}$	<	100	μA

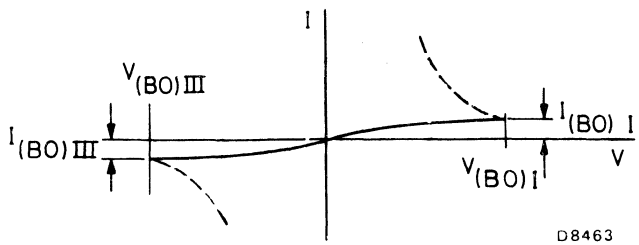

Fig.2

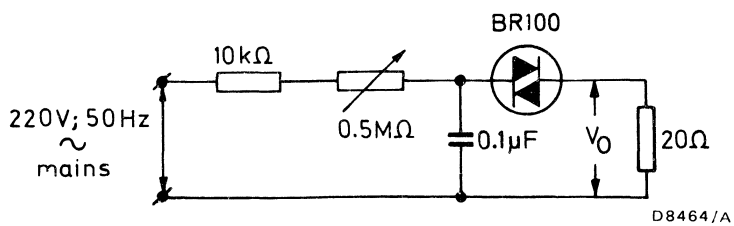

Fig. 3 Test circuit for output voltage

TRIACS

Glass-passivated 4 Ampere triacs intended for use in applications requiring high bidirectional transient and blocking voltage capability and high thermal cycling performance with very low thermal resistances. These triacs feature a high surge current capability and a range of gate current sensitivities between 5 and 50 mA. Typical applications include AC power control circuits such as motor, industrial lighting, industrial and domestic heating control and static switching systems.

QUICK REFERENCE DATA

			BT134–500	600	700	800	
Repetitive peak off-state voltage	V_{DRM}	max.	500	600	700	800	V
RMS on-state current	$I_{T(RMS)}$	max.		4			A
Non-repetitive peak on-state current							
at 50 Hz	I_{TSM}	max.		25			A
at 60 Hz	I_{TSM}	max.		30			A

MECHANICAL DATA

Dimensions in mm

Fig.1 SOT-82.

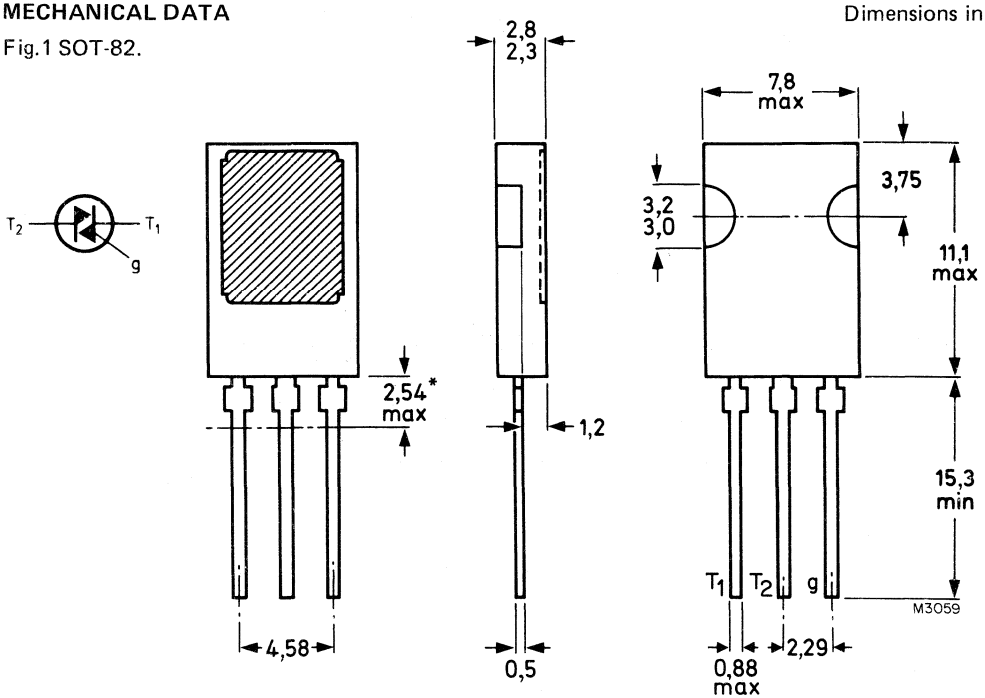

* Within this region the cross-section of leads is uncontrolled.

Net mass: 0.8 g.
Note: The exposed metal mounting base is directly connected to terminal T_2.
Supplied on request: accessories (see data sheets Mounting instructions and accessories for SOT-82 envelopes).

RATINGS

Limiting values in accordance with the Absolute Maximum System (IEC 134).

			BT134–500	600	700	800	
Voltages (in either direction)							
Non-repetitive peak off-state voltage ($t \leqslant 10$ ms)†	V_{DSM}	max.	500*	600*	700*	800	V
Repetitive peak off-state voltage ($\delta \leqslant 0.01$)†	V_{DRM}	max.	500	600	700	800	V
Crest working off-state voltage	V_{DWM}	max.	400	400	400	400	V
Currents (in either direction)							
RMS on-state current (conduction angle 360°) up to T_{mb} = 102 °C	$I_{T(RMS)}$	max.		4			A
Average on-state current for half-cycle operation (averaged over any 20 ms period) up to T_{mb} = 92 °C	$I_{T(AV)}$	max.		2.5			A
Repetitive peak on-state current	I_{TRM}	max.		25			A
Non-repetitive peak on-state current; T_j = 120 °C prior to surge; full sinewave							
t = 20 ms	I_{TSM}	max.		25			A
t = 16.7 ms	I_{TSM}	max.		30			A
I^2t for fusing (t = 10 ms)	I^2t	max.		4			A^2s
Rate of rise of on-state current after triggering with I_G = 200 mA to I_T = 6 A; dI_G/dt = 0.2 A/μs	dI_T/dt	max.		10			A/μs
Gate to terminal 1							
Power dissipation							
Average power dissipation (averaged over any 20 ms period)	$P_{G(AV)}$	max.		0.5			W
Peak power dissipation	P_{GM}	max.		5			W
Temperatures							
Storage temperature	T_{stg}			−40 to +125			°C
Operating junction temperature							
full-cycle operation	T_j	max.		120			°C
half-cycle operation	T_j	max.		110			°C

†For BT134-500D/600D use $R_{(G\text{-}T_1)}$ = 1 kΩ.

*Although not recommended, off-state voltages up to 800 V may be applied without damage, but the triac may switch into the on-state. The rate of rise of on-state current should not exceed 3 A/μs.

THERMAL RESISTANCE

From junction to mounting base				
full-cycle operation	$R_{th\ j\text{-}mb}$	=	3.0	K/W
half-cycle operation	$R_{th\ j\text{-}mb}$	=	3.7	K/W
Transient thermal impedance; t = 1 ms	$Z_{th\ j\text{-}mb}$	=	0.6	K/W

Influence of mounting method

1. Heatsink mounted with clip (see mounting instructions)

Thermal resistance from mounting base to heatsink

a. with heatsink compound	$R_{th\ mb\text{-}h}$	=	0.3	K/W
b. with heatsink compound and 0.06 mm maximum mica insulator (56354)	$R_{th\ mb\text{-}h}$	=	1.4	K/W
c. without heatsink compound	$R_{th\ mb\text{-}h}$	=	1.4	K/W

2. Free-air operation

The quoted value of $R_{th\ j\text{-}a}$ should be used only when no leads of other dissipating components run to the same tie-point.

Thermal resistance from junction to ambient in free air: mounted on a printed-circuit board at any lead length	$R_{th\ j\text{-}a}$	=	100	K/W

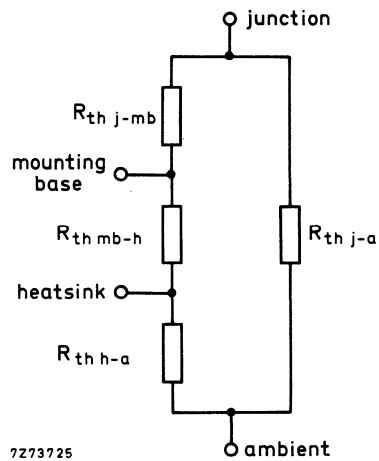

Fig.2 Components of thermal resistance.

CHARACTERISTICS

Polarities, positive or negative, are identified with respect to T_1.

Voltages and currents (in either direction)

On-state voltage (measured under pulse conditions to prevent excessive dissipation)				
I_T = 5 A; T_j = 25 °C	V_T	<	1.70	V
Rate of rise of off-state voltage that will not trigger any device; T_j = 120 °C; gate open circuit				
BT134 series	dV_D/dt	<	100	V/µs
BT134 series G	dV_D/dt	<	200	V/µs
BT134 series F	dV_D/dt	<	50	V/µs
BT134 series E	dV_D/dt	typ.	50	V/µs
BT134–500D/600D	dV_D/dt*	typ.	5	V/µs
Rate of change of commutating voltage that will not trigger any device when $-dI_{com}/dt$ = 1.8 A/ms; $I_{T(RMS)}$ = 4 A; T_{mb} = 85 °C; gate open circuit; $V_D = V_{DWMmax}$				
BT134 series	dV_{com}/dt	typ.	10	V/µs
BT134 series G	dV_{com}/dt	<	10	V/µs
BT134 series F	dV_{com}/dt	typ.	10	V/µs
Off-state current				
$V_D = V_{DWMmax}$; T_j = 120 °C	I_D	<	0.5	mA
Gate voltage that will trigger all devices	V_{GT}	>	1.5	V
Gate voltage that will not trigger any device $V_D = V_{DWMmax}$; T_j = 120 °C; T_2 and G positive or negative	V_{GD}	<	250	mV

Gate current that will trigger all devices (I_{GT}); G to T_1

Holding current (I_H) / Latching current (I_L); V_D = 12 V; T_j = 25 °C			T_2+ G+	T_2+ G–	$T_2–$ G–	$T_2–$ G+	
BT134 series	I_{GT}	>	35	35	35	70	mA
	I_H	<	15	15	15	15	mA
	I_L	<	20	30	20	30	mA
BT134 series G	I_{GT}	>	50	50	50	100	mA
	I_H	<	30	30	30	30	mA
	I_L	<	30	45	30	45	mA
BT134 series F	I_{GT}	>	25	25	25	70	mA
	I_H	<	15	15	15	15	mA
	I_L	<	20	30	20	30	mA
BT134 series E	I_{GT}	>	10	10	10	25	mA
	I_H	<	15	15	15	15	mA
	I_L	<	15	20	15	20	mA
BT134–500D/600D	I_{GT}	>	5	5	5	10	mA
	I_H	<	10	10	10	10	mA
	I_L	<	10	15	10	15	mA

*$R_{(G-T_1)}$ = 1 kΩ.

MOUNTING INSTRUCTIONS

1. The device may be soldered directly into the circuit. The maximum permissible soldering temperature is 275 °C. Heat must not be applied for more than 5 seconds. Soldered joints must be at least 4.7 mm from the body of the device.
2. The leads must not be bent less than 2.4 mm from the body of the device and should be supported during bending. The leads can be bent, twisted or straightened by 90° maximum. The minimum bending radius is 1 mm.
3. Any heatsink used must have a flatness in the mounting area of 0.02 mm maximum per 10 mm. Mounting holes must be deburred.
4. For spring-clip mounting a metallic-oxide loaded heatsink compound must be used to ensure good thermal contact between the mounting-base and heatsink. Ordinary silicone grease is not recommended.
5. Body mounting of the device into a hybrid circuit is possible either by soldering or by adhesive. For soldering either a copper-plate or anodized aluminium-plate with a copper layer are recommended. The device can be adhesively mounted to a ceramic substrate.
6. Any solder or adhesive layer used for body mounting must be as thin as possible with all air voids eliminated. This prevents excessive heat rise within the device.

OPERATING NOTES

Dissipation and heatsink considerations:

a. The method of using Fig.3 is as follows:
Starting with the required current on the $I_{T(AV)}$ or $I_{T(RMS)}$ axis, trace upwards to meet the appropriate form factor or conduction angle curve. Trace horizontally and upwards from the appropriate value on the T_{amb} scale. The intersection determines the $R_{th\ mb\text{-}a}$. The heatsink thermal resistance value ($R_{th\ h\text{-}a}$) can now be calculated from:

$$R_{th\ h\text{-}a} = R_{th\ mb\text{-}a} - R_{th\ mb\text{-}h}.$$

b. Any measurement of heatsink temperature should be made immediately adjacent to the device.

FULL-CYCLE OPERATION

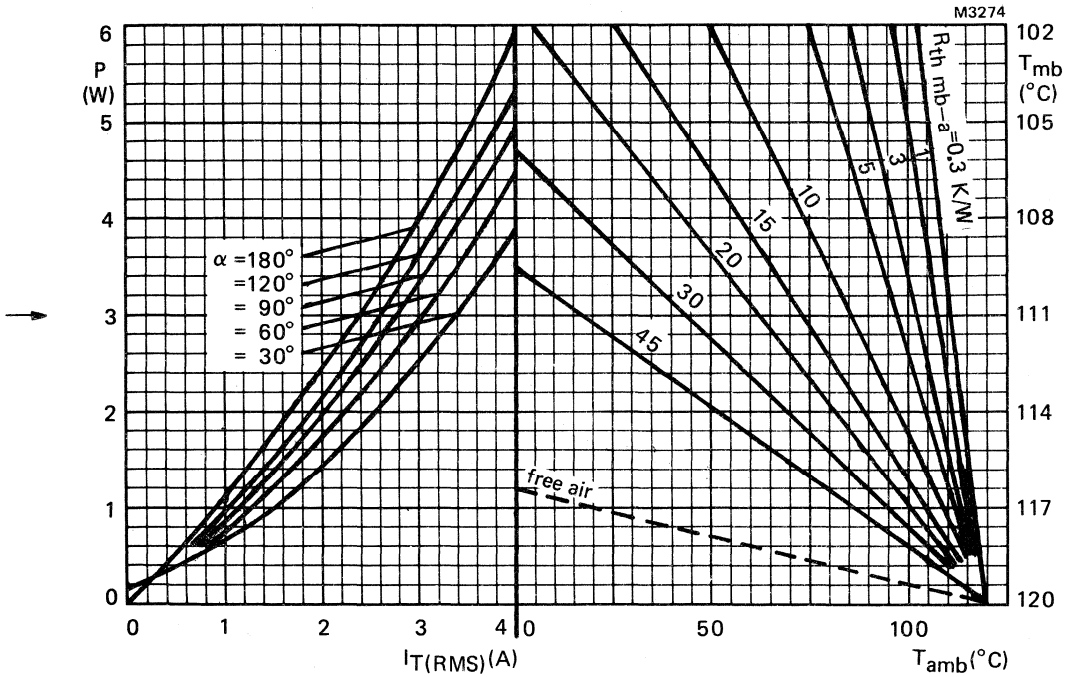

Fig.3 The right-hand part shows the interrelationship between the power (derived from the left-hand part) and the maximum permissible temperatures.

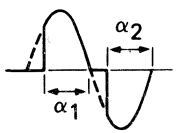

$\alpha = \alpha_1 = \alpha_2$: conduction angle per half cycle

OVERLOAD OPERATION

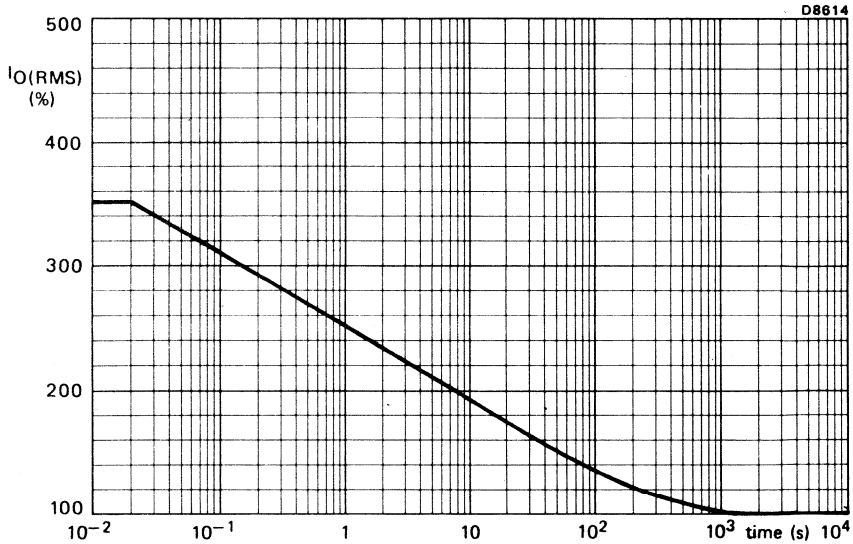

Fig.4 Maximum permissible duration of steady overload (provided that T_{mb} does not exceed 120 °C during and after overload) expressed as a percentage of the steady state r.m.s. rated current. For high r.m.s. overload currents precautions should be taken so that the temperature of the terminals does not exceed 125 °C. During these overload conditions the triac may lose control. Therefore the overload should be terminated by a separate protection device.

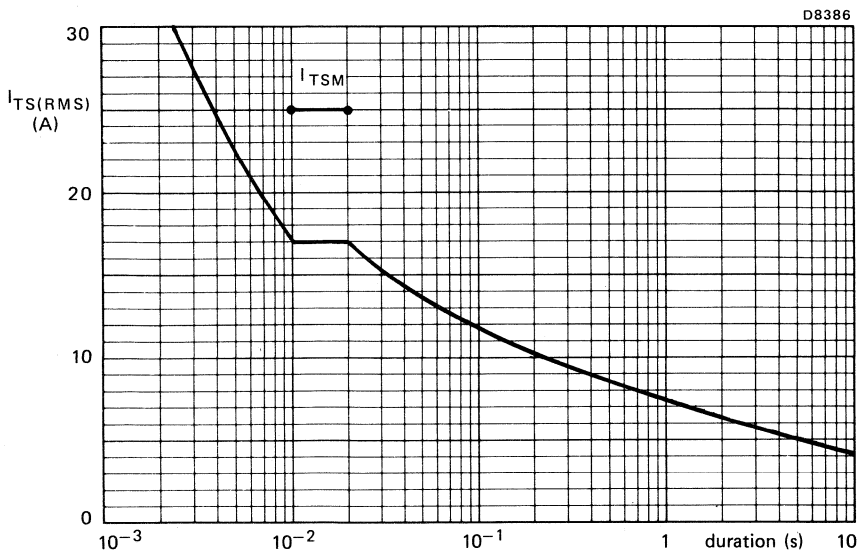

Fig.5 Maximum permissible non-repetitive r.m.s. on-state current based on sinusoidal currents (f = 50 Hz); T_j = 120 °C prior to surge. The triac may temporarily lose control following the surge.

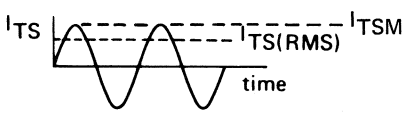

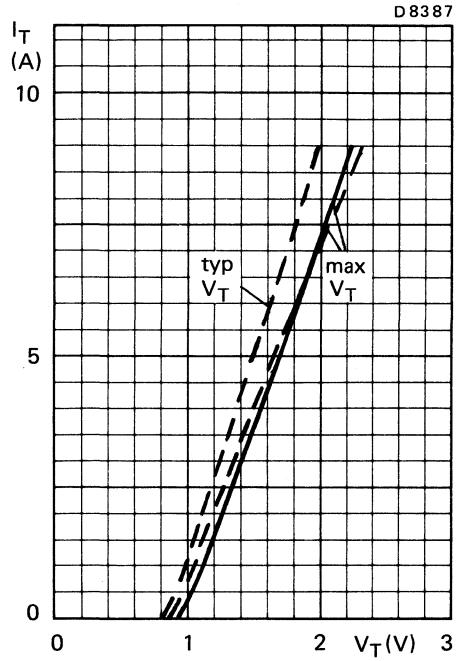

Fig.6 On state voltage drop.

—— T_j = 25 °C; – – – T_j = 120 °C

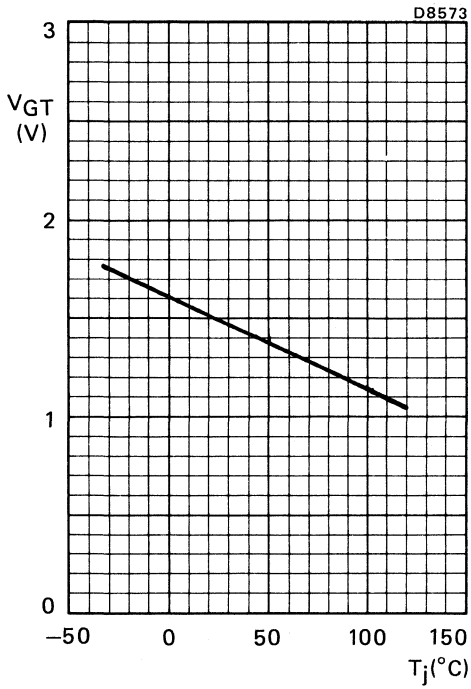

Fig.7 Minimum gate voltage that will trigger all devices; all conditions.

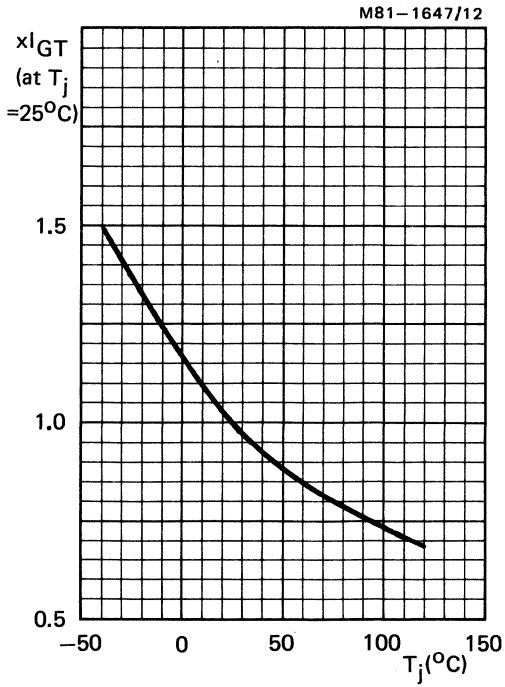

Fig.8 Normalised gate current that will trigger all devices; all conditions.

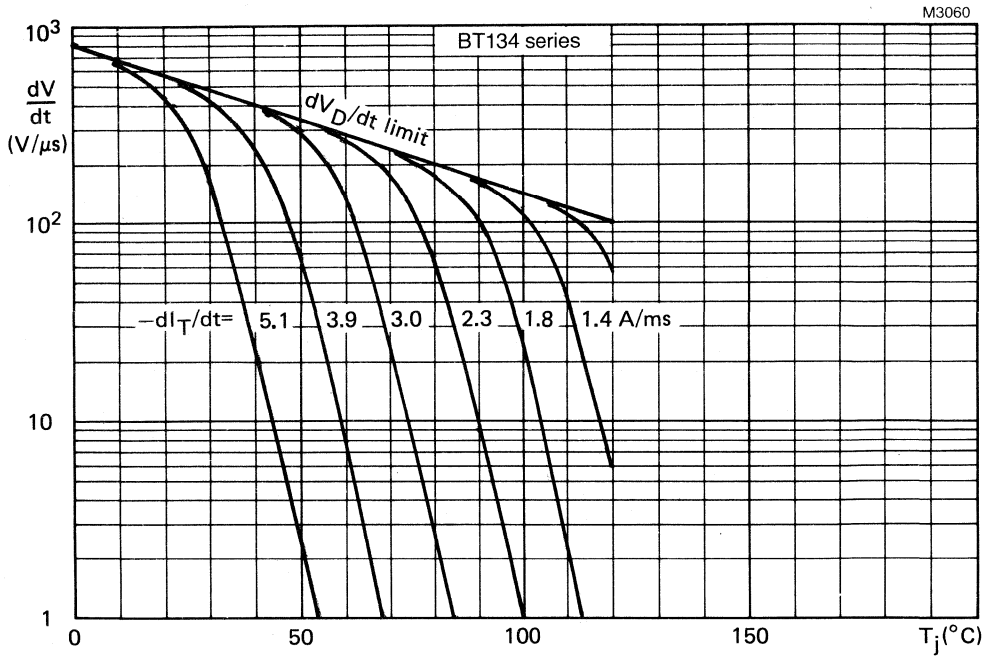

Fig.9 Typical commutation dV/dt for BT134 series versus T_j. The triac should commutate when the dV/dt is below the value on the appropriate curve for pre-commutation dI_T/dt.

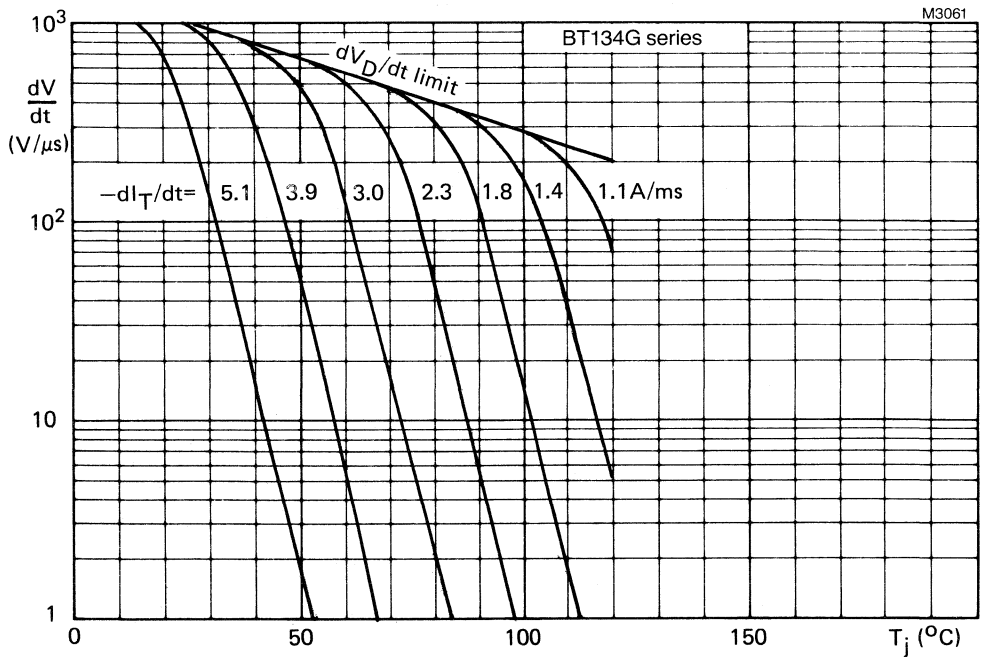

Fig.10 Limit commutation dV/dt for BT134G series versus T_j. The triac should commutate when the dV/dt is below the value on the appropriate curve for pre-commutation dI_T/dt.

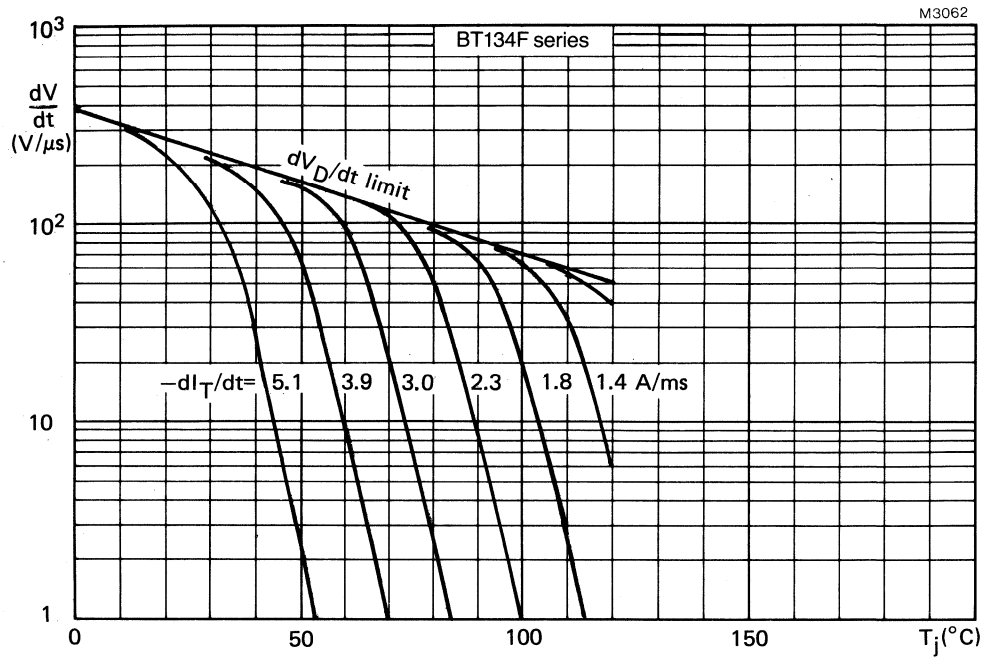

Fig.11 Typical commutation dV/dt for BT134F series versus T_j. The triac should commutate when the dV/dt is below the value on the appropriate curve for pre-commutation dI_T/dt.

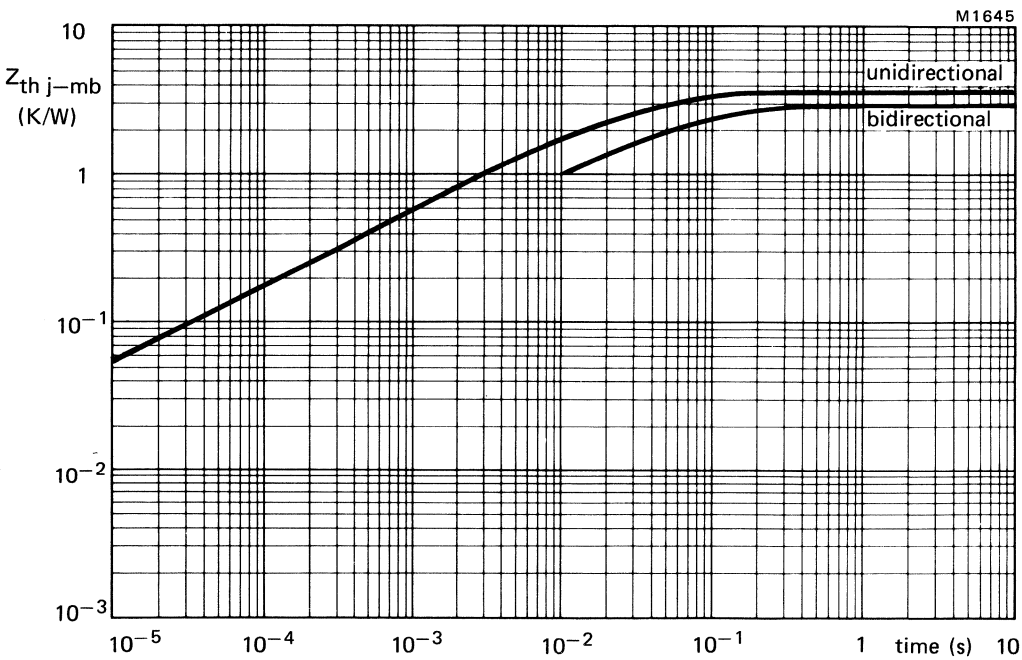

Fig.12 Transient thermal impedance.

TRIACS

Glass-passivated triacs in SOT-223 plastic envelopes suitable for surface mounting. They are intended for general purpose switching and phase control applications.

QUICK REFERENCE DATA

			BT134W-500	600	700	800	
Repetitive peak off-state voltage	V_{DRM}	max.	500	600	700	800	V
RMS on-state current	$I_{T(RMS)}$	max.		1			A
Non-repetitive peak on-state current	I_{TSM}	max.		10			A

MECHANICAL DATA

Dimensions in mm

Fig. 1 SOT-223

Pinning:
1 = Terminal 1
2 = Terminal 2
3 = Gate
4 = Terminal 2(tab)

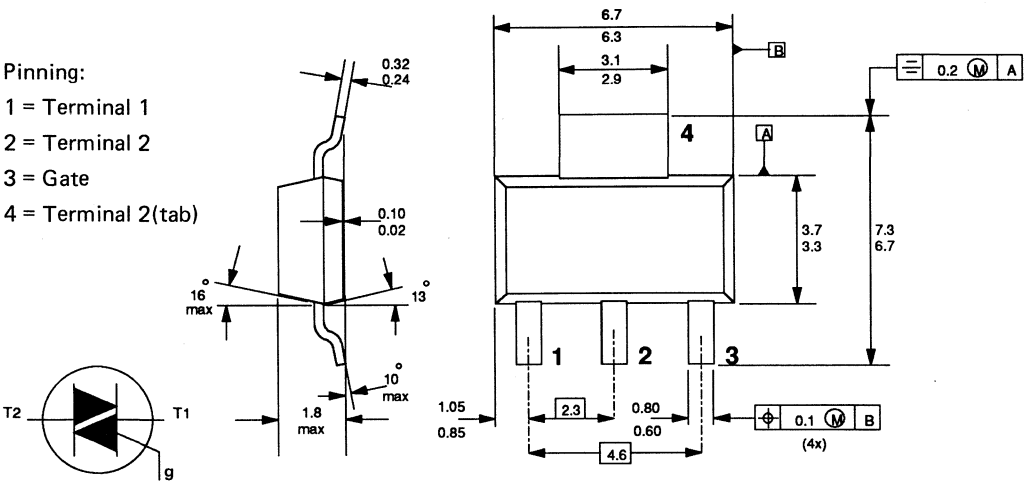

Net mass: 0.11 g.
Notes:
1 Refer to surface mounting instructions for SOT-223 envelope.

RATINGS

Limiting values in accordance with the Absolute Maximum System (IEC 134).

Voltages (in either direction)			BT134W-500	600	700	800	
Non-repetitive peak off-state voltage (t ≤ 10 ms)	V_{DSM}	max.	500	600	700	800	V
Repetitive peak off-state voltage (δ ≤ 0.01)	V_{DRM}	max.	500	600	700	800	V
Crest working off-state voltage	V_{DWM}	max.	400	400	400	400	V
Currents (in either direction)							
RMS on-state current (conduction angle 360°) up to T_b = 77 °C	$I_{T(RMS)}$	max.		1			A
Repetitive peak on-state current	I_{TRM}	max.		10			A
Non-repetitive peak on-state current; T_j = 120 °C prior to surge; full sinewave t = 20 ms	I_{TSM}	max.		10			A
I^2t for fusing (t = 10 ms)	I^2t	max.		0.5			A^2s
Rate of rise of on-state current after triggering with I_G = 200 mA to I_T = 1.5 A; dI_G/dt = 0.2 A/μs	dI_T/dt	max.		10			A/μs
Gate to terminal 1							
Power dissipation							
Average power dissipation (averaged over any 20 ms period)	$P_{G(AV)}$	max.		0.13			W
Peak power dissipation	P_{GM}	max.		1.3			W
Temperatures							
Storage temperature	T_{stg}			−40 to + 125			°C
Operating junction temperature							
full-cycle operation	T_j	max.		120			°C
half-cycle operation	T_j	max.		110			°C

THERMAL RESISTANCE

From junction to board				
p.c.b. mounted (see Fig. 3; note 2)	$R_{th\ j-b}$	=	30	K/W
p.c.b. mounted (see Fig. 3)	$R_{th\ j-a}$	=	70	K/W

Notes:

2 Temperature measured 1-3mm from tab (see Fig. 1 for tab).

DEVELOPMENT DATA

CHARACTERISTICS

Polarities, positive or negative, are identified with respect to T_1.

Voltages and currents (in either direction)

On-state voltage (measured under pulse conditions to prevent excessive dissipation)				
I_T = 1.5 A; T_j = 25 °C	V_T	typ.	1.2	V
	V_T	<	1.70	V
Rate of rise of off-state voltage that will not trigger any device; T_j = 120 °C; gate open circuit BT134 series	dV_D/dt	<	100	V/μs
Rate of change of commutating voltage that will not trigger any device when $-dI_{com}/dt$ = 1.8 A/ms; $I_{T(RMS)}$ = 1 A; T_b = 50 °C; gate open circuit; $V_D = V_{DWMmax}$	dV_{com}/dt	typ.	10	V/μs
Off-state current $V_D = V_{DWMmax}$; T_j = 120 °C	I_D	<	0.5	mA
Gate voltage that will trigger all devices				
V_D = 12V	V_{GT}	>	1.5	V
V_D = 12V; T_j = −40 °C	V_{GT}	>	2.3	V
Gate voltage that will not trigger any device $V_D = V_{DWMmax}$; T_j = 120 °C; T_2 and G positive or negative	V_{GD}	<	250	mV

			T_2+ G+	T_2+ G−	T_2- G−	T_2- G+	
Gate current that will trigger all devices							
G to T_1; V_D = 12 V; T_j = 25 °C	I_{GT}	>	35	35	35	70	mA
Holding current	I_H	<	15	15	15	15	mA
Latching current	I_L	<	20	30	20	30	mA

MOUNTING INSTRUCTIONS

All dimensions in mm

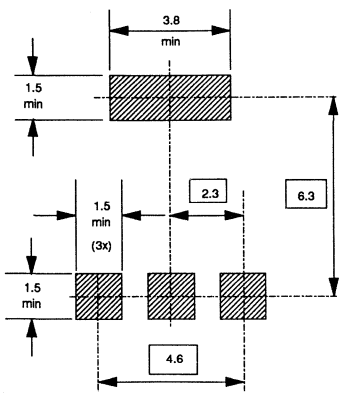

Fig. 2 soldering pattern for surface mounting SOT-223.

PRINTED CIRCUIT BOARD

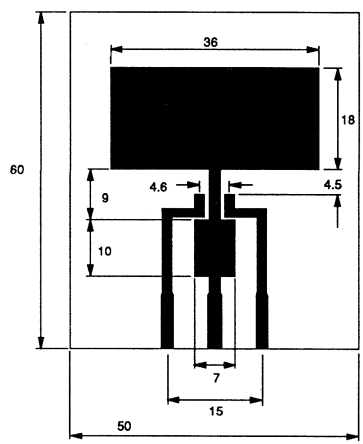

Fig. 3 PCB for thermal resistance and power rating for SOT-223.

FULL-CYCLE OPERATION

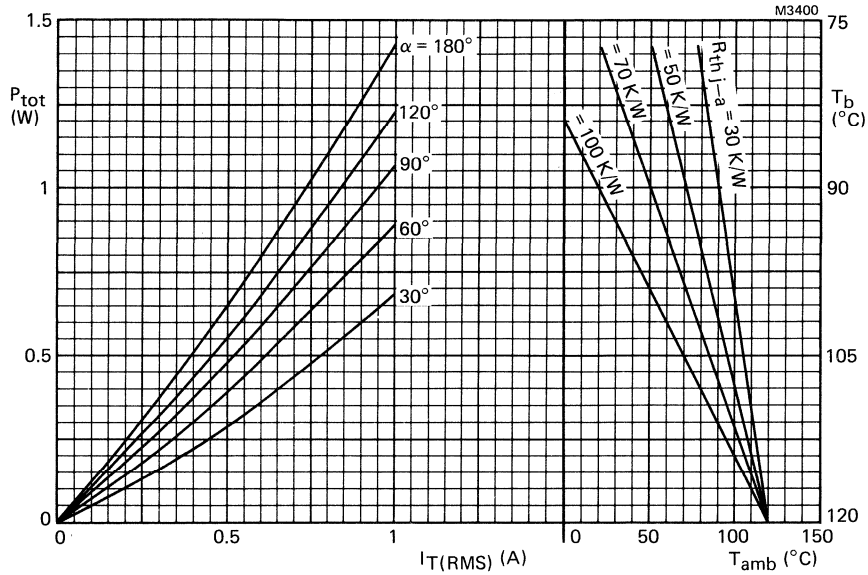

Fig. 4 The right-hand part shows the interrelationship between the power (derived from the left-hand part) and the maximum permissible temperatures for various p.c.b. mountings.

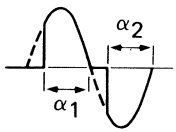

$\alpha = \alpha_1 = \alpha_2$: conduction angle per half cycle

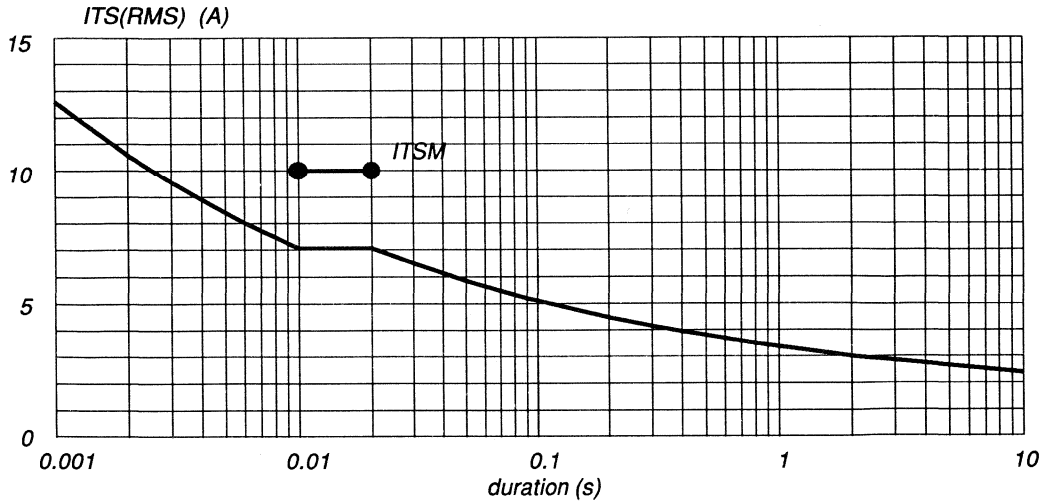

Fig. 5 Maximum permissible non-repetitive RMS on-state current based on sinusoidal currents (f = 50 Hz); T_j = 120 °C prior to surge. The triac may temporarily lose control following the surge.

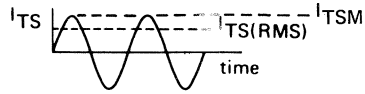

DEVELOPMENT DATA

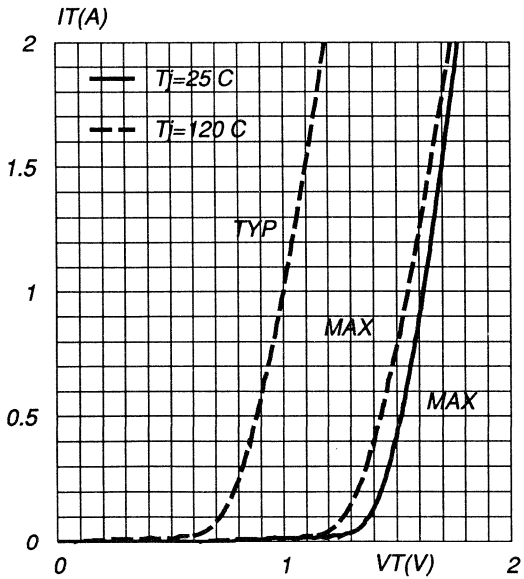

Fig. 6 On-state voltage drop.

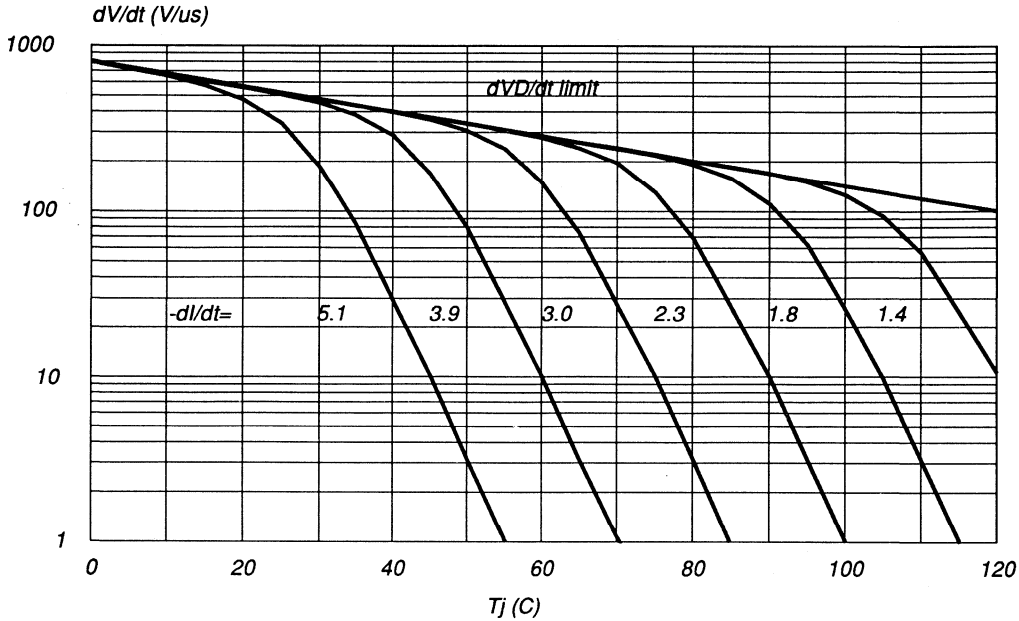

Fig. 7 Typical commutation dV/dt for BT134W series versus T_j. The triac should commutate when the dV/dt is below the value on the appropriate curve for pre-commutation dI_T/dt.

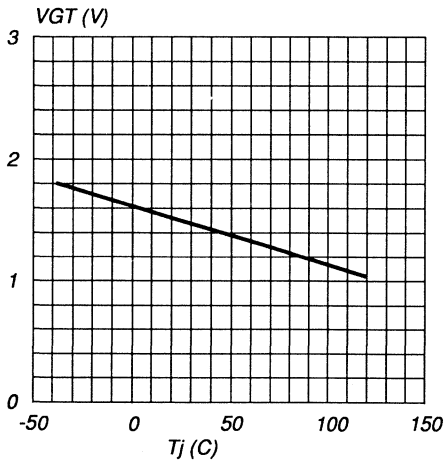

Fig. 8 Minimum gate voltage that will trigger all devices; all conditions.

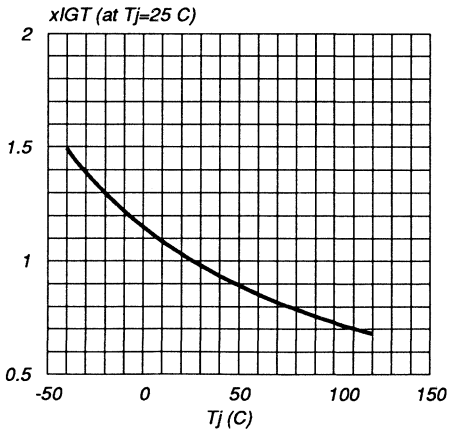

Fig. 9 Normalised gate current that will trigger all devices; all conditions.

TRIACS

Glass-passivated 4 ampere triacs intended for use in applications requiring high bidirectional transient and blocking voltage capability and high thermal cycling performance with very low thermal resistances. These triacs feature a high surge current capability and a range of gate current sensitivities between 5 and 50 mA. Typical applications include AC power control circuits such as motor, industrial lighting, industrial and domestic heating control and static switching systems.

QUICK REFERENCE DATA

			BT136–500	600	700	800	
Repetitive peak off-state voltage	V_{DRM}	max.	500	600	700	800	V
RMS on-state current	$I_{T(RMS)}$	max.		4			A
Non-repetitive peak on-state current							
at 50 Hz	I_{TSM}	max.		25			A
at 60 Hz	I_{TSM}	max.		30			A

MECHANICAL DATA

Dimensions in mm

Fig.1 TO–220AB

Pinning:

1 = Terminal 1

2 = Terminal 2

3 = Gate

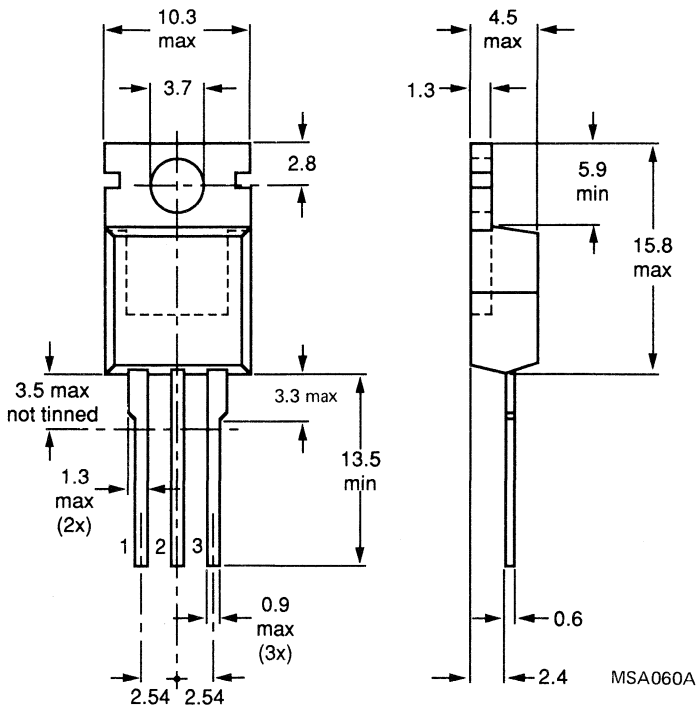

Net mass: 2 g

Note: The exposed metal mounting base is directly connected to terminal T_2.

Supplied on request: accessories (see data sheets Mounting instructions and accessories for TO–220 envelopes).

RATINGS

Limiting values in accordance with the Absolute Maximum System (IEC 134).

Voltages (in either direction)			BT136–500	600	700	800	
Non-repetitive peak off-state voltage ($t \leqslant 10$ ms)†	V_{DSM}	max.	500*	600*	700*	800	V
Repetitive peak off-state voltage ($\delta \leqslant 0.01$)†	V_{DRM}	max.	500	600	700	800	V
Crest working off-state voltage	V_{DWM}	max.	400	400	400	400	V

Currents (in either direction)				
RMS on-state current (conduction angle 360°) up to T_{mb} = 102 °C	$I_{T(RMS)}$	max.	4	A
Repetitive peak on-state current	I_{TRM}	max.	25	A
Non-repetitive peak on-state current; T_j = 120 °C prior to surge; full sinewave				
t = 20 ms	I_{TSM}	max.	25	A
t = 16.7 ms	I_{TSM}	max.	30	A
I^2t for fusing (t = 10 ms)	I^2t	max.	4	A^2s
Rate of rise of on-state current after triggering with I_G = 200 mA to I_T = 6 A; dI_G/dt = 0.2 A/μs	dI_T/dt	max.	10	A/μs

Gate to terminal 1

Power dissipation				
Average power dissipation (averaged over any 20 ms period)	$P_{G(AV)}$	max.	0.5	W
Peak power dissipation	P_{GM}	max.	5	W

Temperatures				
Storage temperature	T_{stg}		−40 to +125	°C
Operating junction temperature				
full-cycle operation	T_j	max.	120	°C
half-cycle operation	T_j	max.	110	°C

†For BT136–500D/600D use $R_{(G-T_1)}$ = 1 kΩ.

*Although not recommended, off-state voltages up to 800 V may be applied without damage, but the triac may switch into the on-state. The rate of rise of on-state current should not exceed 3 A/μs.

THERMAL RESISTANCE

From junction to mounting base				
full-cycle operation	$R_{th\ j\text{-}mb}$	=	3.0	K/W
half-cycle operation	$R_{th\ j\text{-}mb}$	=	3.7	K/W
Transient thermal impedance; t = 1 ms	$Z_{th\ j\text{-}mb}$	=	0.6	K/W

Influence of mounting method

1. Heatsink mounted with clip (see mounting instructions)

Thermal resistance from mounting base to heatsink

a. with heatsink compound	$R_{th\ mb\text{-}h}$	=	0.3	K/W
b. with heatsink compound and 0.06 mm maximum mica insulator	$R_{th\ mb\text{-}h}$	=	1.4	K/W
c. with heatsink compound and 0.1 mm max. mica insulator (56369)	$R_{th\ mb\text{-}h}$	=	2.2	K/W
d. with heatsink compound and 0.25 mm max. alumina insulator (56367)	$R_{th\ mb\text{-}h}$	=	0.8	K/W
e. without heatsink compound	$R_{th\ mb\text{-}h}$	=	1.4	K/W

2. Free-air operation

The quoted value of $R_{th\ j\text{-}a}$ should be used only when no leads of other dissipating components run to the same tie-point.

Thermal resistance from junction to ambient in free air: mounted on a printed-circuit board at any lead length	$R_{th\ j\text{-}a}$	=	60	K/W

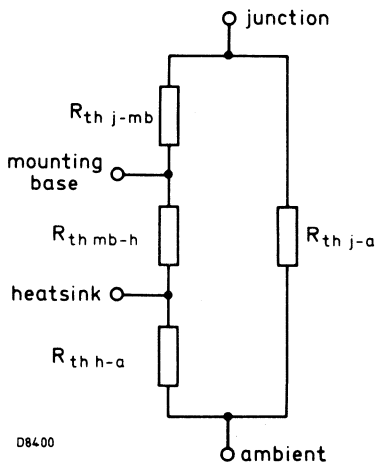

Fig.2 Components of thermal resistance.

CHARACTERISTICS (T_j = 25 °C unless otherwise stated)

Polarities, positive or negative, are identified with respect to T_1.

Voltages and currents (in either direction)

On-state voltage (measured under pulse conditions to prevent excessive dissipation)

I_T = 5 A	V_T	<	1.70	V

Rate of rise of off-state voltage that will not trigger any device; T_j = 120 °C; gate open circuit

BT136 series	dV_D/dt	<	100	V/µs
BT136 series G	dV_D/dt	<	200	V/µs
BT136 series F	dV_D/dt	<	50	V/µs
BT136 series E	dV_D/dt	typ.	50	V/µs
BT136–500D/600D ($R_{(G-T_1)}$ = 1kΩ)	dV_D/dt	typ.	5	V/µs

Rate of change of commutating voltage that will not trigger any device when $-dI_{com}/dt$ = 1.8A/ms; $I_{T(RMS)}$ = 4 A; T_{mb} = 85 °C; gate open circuit; $V_D = V_{DWMmax}$

BT136 series	dV_{com}/dt	typ.	10	V/µs
BT136 series G	dV_{com}/dt	<	10	V/µs
BT136 series F	dV_{com}/dt	typ.	10	V/µs

Off-state current

$V_D = V_{DWMmax}$; T_j = 120 °C	I_D	<	0.5	mA

Gate voltage that will trigger all devices	V_{GT}	>	1.5	V

Gate voltage that will not trigger any device

$V_D = V_{DWMmax}$; T_j = 120 °C; T_2 and G positive or negative	V_{GD}	<	250	mV

Gate current that will trigger all devices (I_{GT}); G to T_1

Holding current (I_H)

Latching current (I_L); V_D = 12 V

			T_2+ G+	T_2+ G–	T_2- G–	T_2- G+	
BT136 series	I_{GT}	>	35	35	35	70	mA
	I_H	<	15	15	15	15	mA
	I_L	<	20	30	20	30	mA
BT136 series G	I_{GT}	>	50	50	50	100	mA
	I_H	<	30	30	30	30	mA
	I_L	<	30	45	30	45	mA
BT136 series F	I_{GT}	>	25	25	25	70	mA
	I_H	<	15	15	15	15	mA
	I_L	<	20	30	20	30	mA
BT136 series E	I_{GT}	>	10	10	10	25	mA
	I_H	<	15	15	15	15	mA
	I_L	<	15	20	15	20	mA
BT136–500D/600D	I_{GT}	>	5	5	5	10	mA
	I_H	<	10	10	10	10	mA
	I_L	<	10	15	10	15	mA

MOUNTING INSTRUCTIONS

1. The device may be soldered directly into the circuit, but the maximum permissible temperature of the soldering iron or bath is 275 °C; it must not be in contact with the joint for more than 5 seconds. Soldered joints must be at least 4.7 mm from the seal.
2. The leads should not be bent less than 2.4 mm from the seal, and should be supported during bending. The leads can be bent, twisted or straightened by 90° maximum. The minimum bending radius is 1 mm.
3. It is recommended that the circuit connection be made to tag T_2, rather than direct to the heatsink.
4. Mounting by means of a spring clip is the best mounting method because it offers:
   a. a good thermal contact under the crystal area and slightly lower $R_{th\ mb\text{-}h}$ values than screw mounting.
   b. safe isolation for mains operation.
   However, if a screw is used, it should be M3 cross-recess pan-head. Care should be taken to avoid damage to the plastic body.
5. For good thermal contact, heatsink compound should be used between mounting base and heatsink. Values of $R_{th\ mb\text{-}h}$ given for mounting with heatsink compound refer to the use of a metallic-oxide loaded compound. Ordinary silicone grease is not recommended.
6. Rivet mounting (only possible for non-insulated mounting)

   Devices may be rivetted to flat heatsinks; such a process must neither deform the mounting tab, nor enlarge the mounting hole. The maximum recommended hole size for rivet mounting is 3.5mm. The pre-formed head of the rivet should be on the device side and any rivet tool used should not damage the plastic body of the device.
7. The heatsink must have a flatness in the mounting area of 0.02 mm maximum per 10 mm. Mounting holes must be deburred.

FULL-CYCLE OPERATION

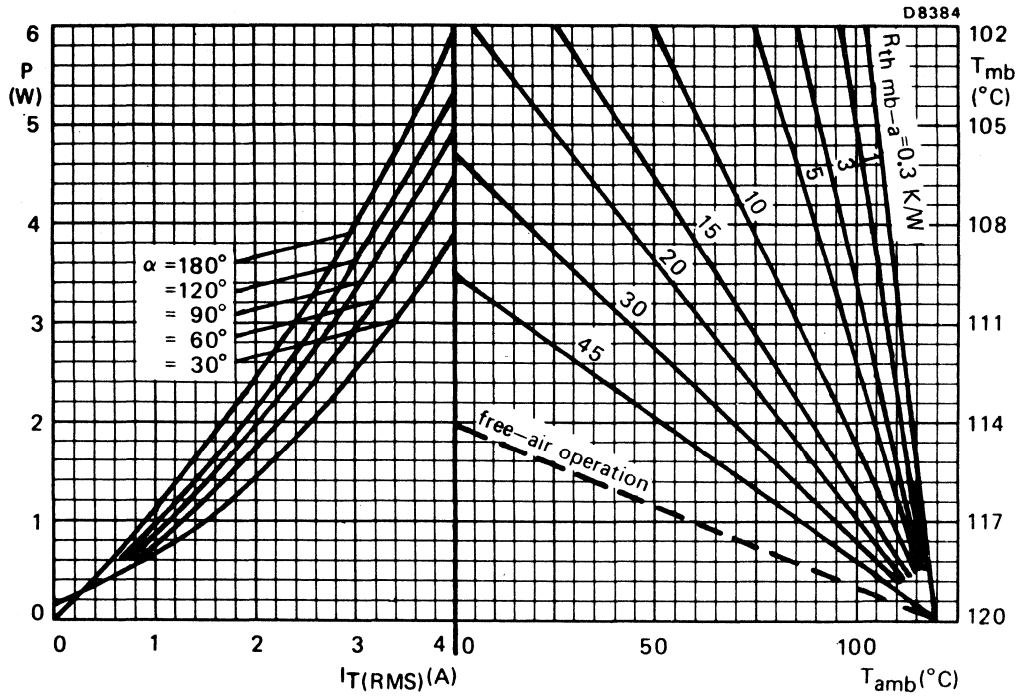

Fig.3 The right-hand part shows the interrelationship between the power (derived from the left-hand part) and the maximum permissible temperatures.

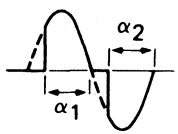

$\alpha = \alpha_1 = \alpha_2$: conduction angle per half cycle

OPERATING NOTES

Dissipation and heatsink considerations:

a. The method of using Fig.3 is as follows:
Starting with the required current on the $I_{T(AV)}$ or $I_{T(RMS)}$ axis, trace upwards to meet the appropriate form factor or conduction angle curve. Trace horizontally and upwards from the appropriate value on the T_{amb} scale. The intersection determines the $R_{th\ mb-a}$. The heatsink thermal resistance value ($R_{th\ h-a}$) can now be calculated from:

$R_{th\ h-a} = R_{th\ mb-a} - R_{th\ mb-h}$.

b. Any measurement of heatsink temperature should be made immediately adjacent to the device.

OVERLOAD OPERATION

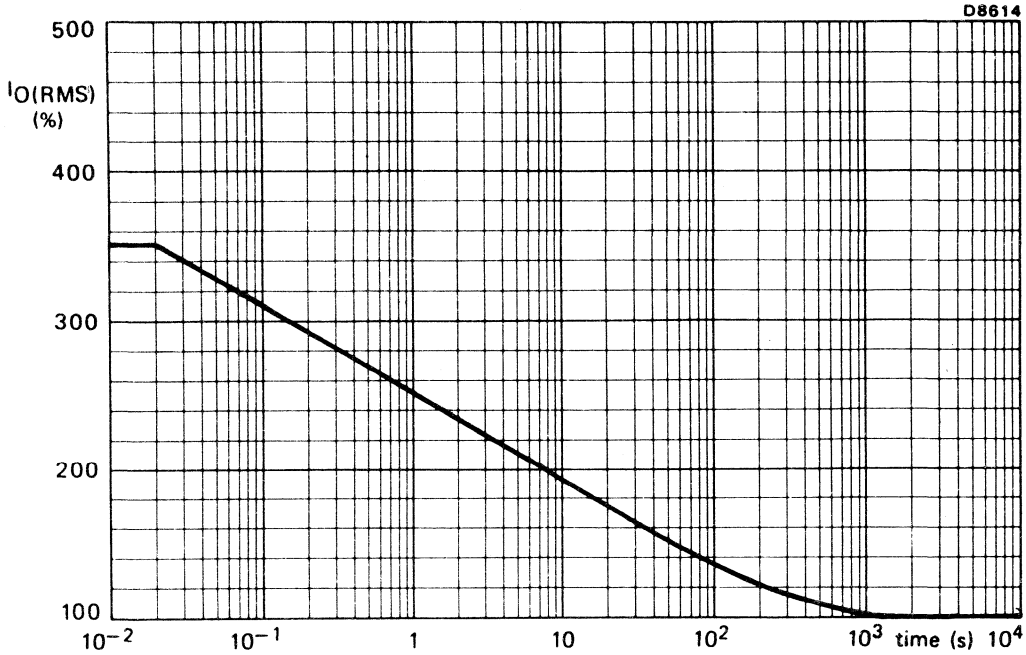

Fig.4 Maximum permissible duration of steady overload (provided that T_{mb} does not exceed 120 °C during and after overload) expressed as a percentage of the steady state r.m.s. rated current. For high r.m.s. overload currents precautions should be taken so that the temperature of the terminals does not exceed 125 °C. During these overload conditions the triac may lose control. Therefore the overload should be terminated by a separate protection device.

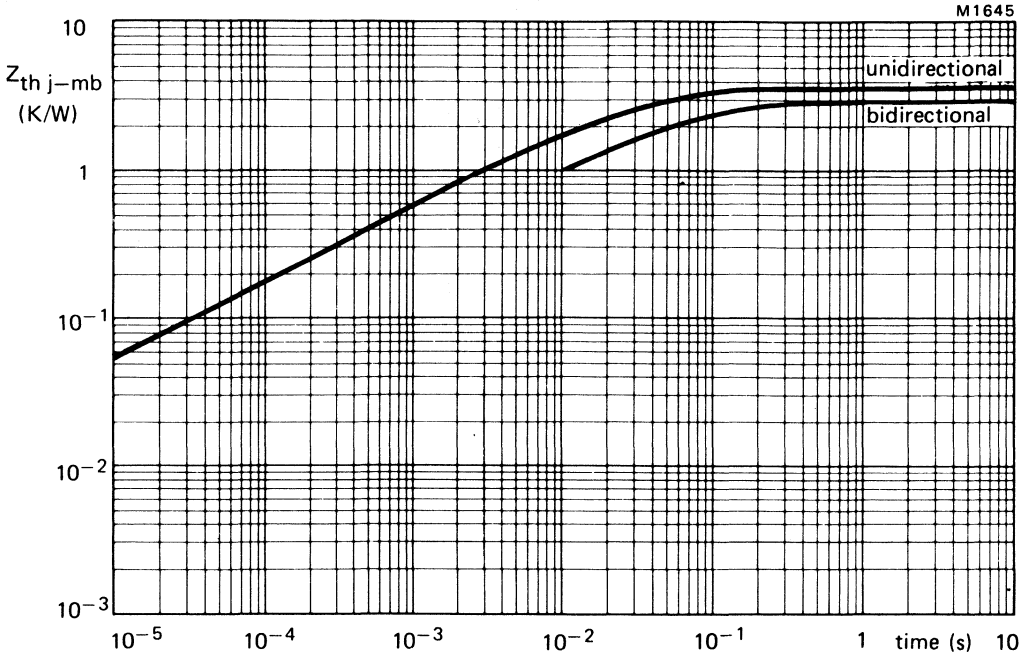

Fig.5 Thermal impedance as a function of dissipation time.

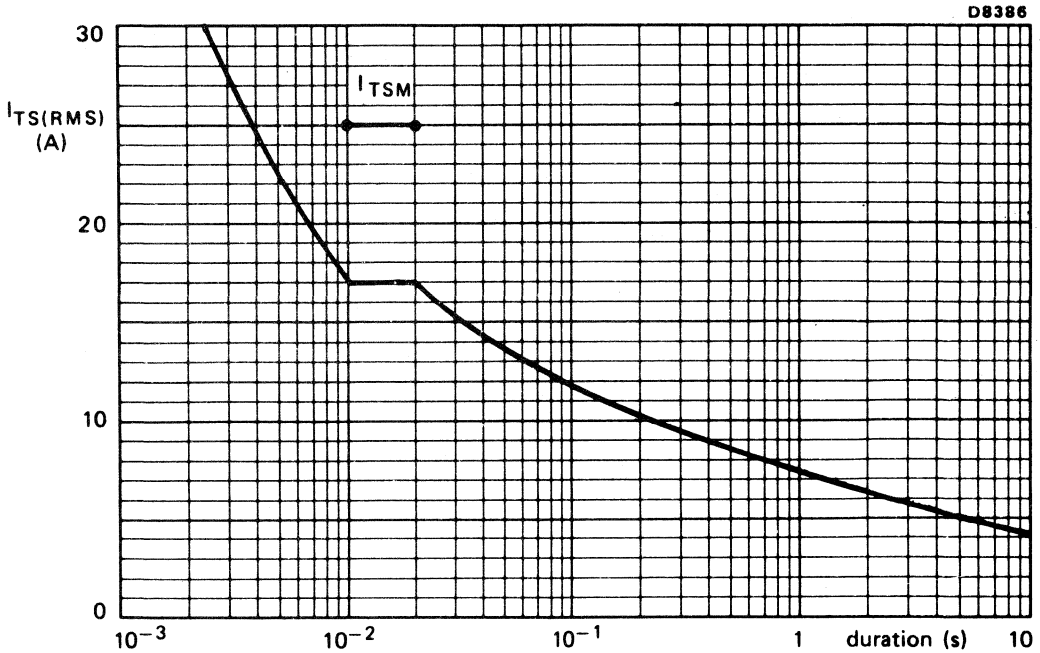

Fig.6 Maximum permissible non-repetitive r.m.s. on-state current based on sinusoidal currents (f = 50 Hz); T_j = 120 °C prior to surge. The triac may temporarily lose control following the surge.

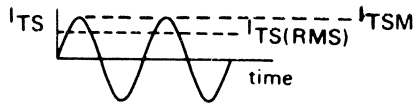

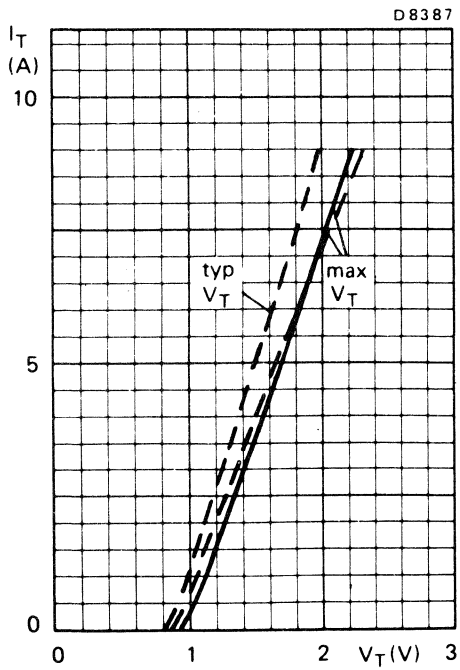

Fig.7 On–state voltage drop (V_T) versus on–state current (I_T);
—— T_j = 25 °C; – – – T_j = 120 °C.

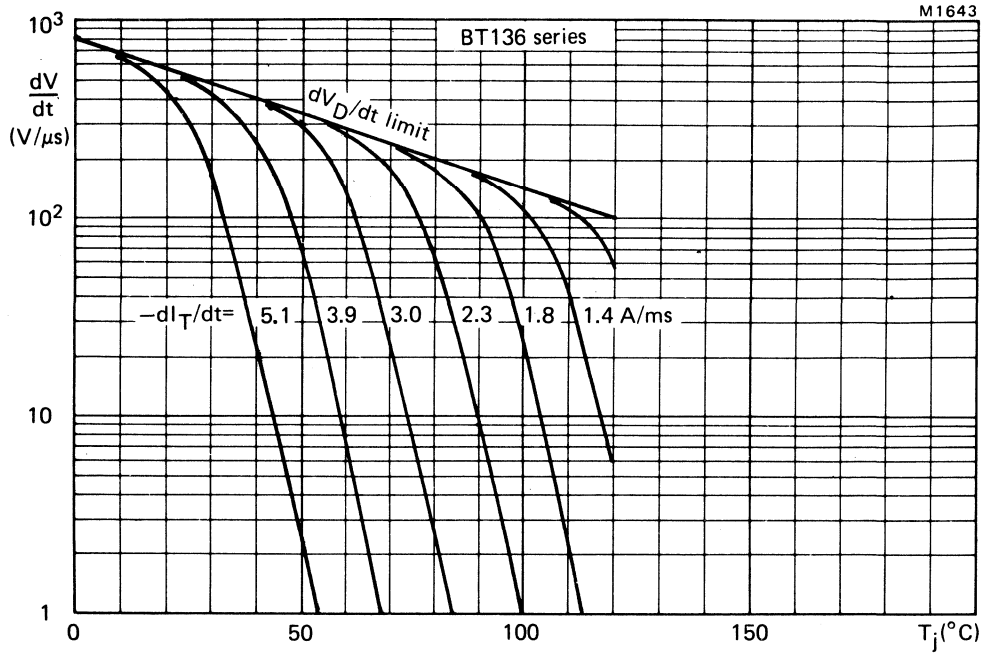

Fig.8 Typical commutation dV/dt for BT136 series versus T_j. The triac should commutate when the dV/dt is below the value on the appropriate curve for pre-commutation dI_T/dt.

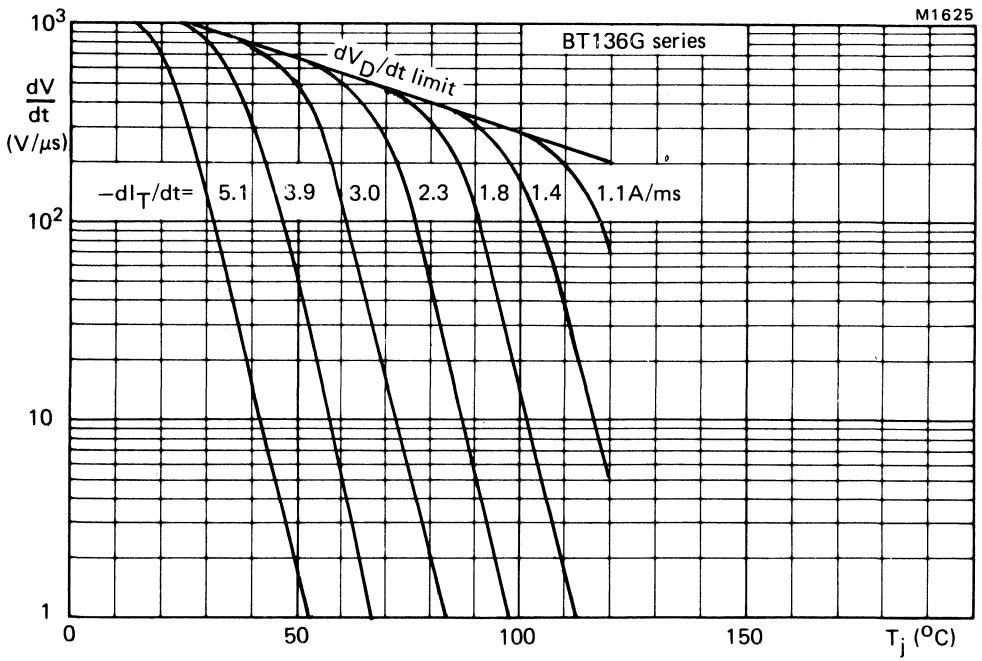

Fig.9 Limit commutation dV/dt for BT136G series versus T_j. The triac should commutate when the dV/dt is below the value on the appropriate curve for pre-commutation dI_T/dt.

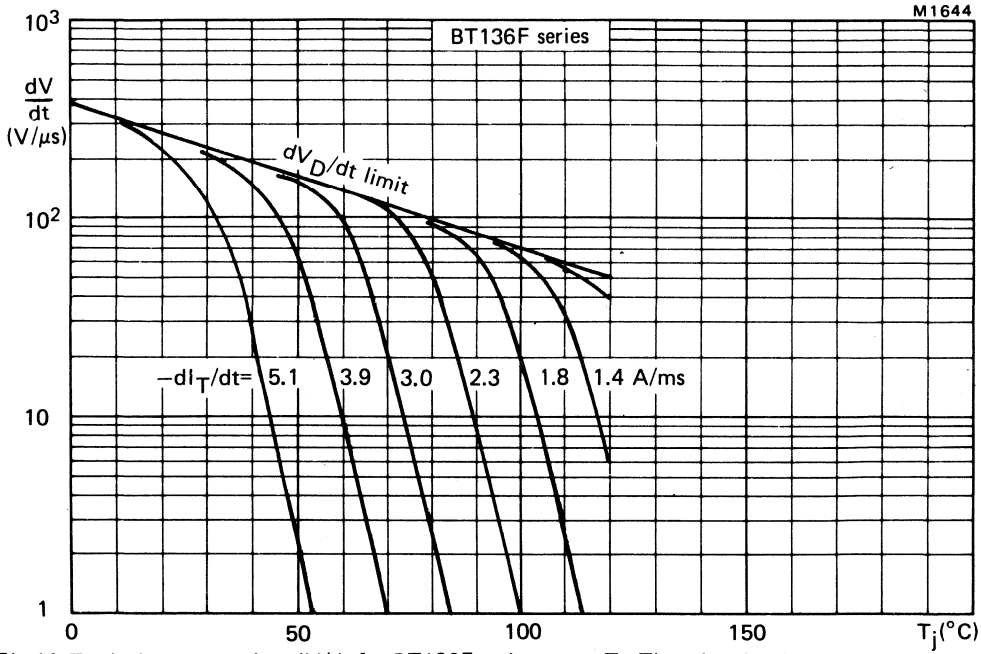

Fig.10 Typical commutation dV/dt for BT136F series versus T_j. The triac should commutate when the dV/dt is below the value on the appropriate curve for pre-commutation dI_T/dt.

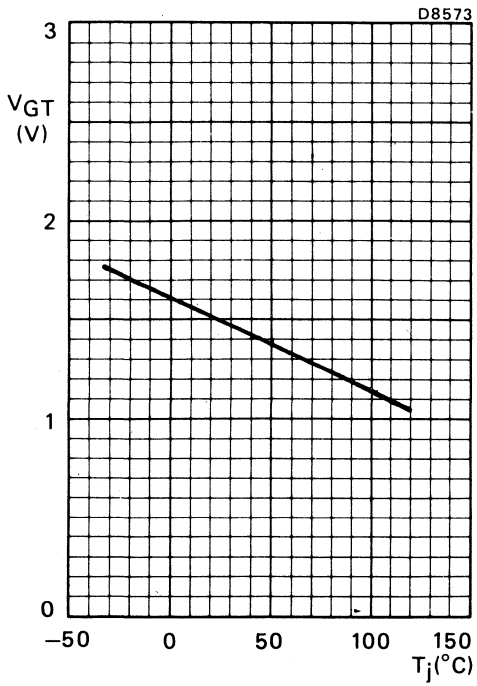

Fig.11 Minimum gate voltage that will trigger all devices; all conditions.

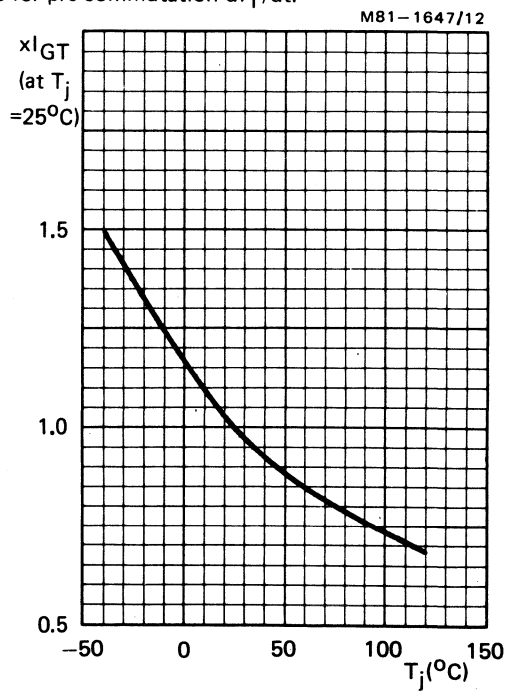

Fig.12 Normalised gate current that will trigger all devices; all conditions.

FULL-PACK TRIACS

Glass-passivated 4 ampere triacs in SOT-186 envelopes, which feature an electrically isolated mounting base. They are intended for use in applications requiring high bidirectional transient and blocking voltage capability. These triacs feature a high surge current capability and a range of gate current sensitivities between 5 and 50 mA. Typical applications include AC power control circuits such as motor, industrial lighting, industrial and domestic heating control and static switching systems.

QUICK REFERENCE DATA

			BT136F–500	600	700	800	
Repetitive peak off-state voltage	V_{DRM}	max.	500	600	700	800	V
RMS on-state current	$I_{T(RMS)}$	max.			4		A
Non-repetitive peak on-state current							
at 50 Hz	I_{TSM}	max.			25		A
at 60 Hz	I_{TSM}	max.			30		A

MECHANICAL DATA

Dimensions in mm

Fig.1 SOT-186

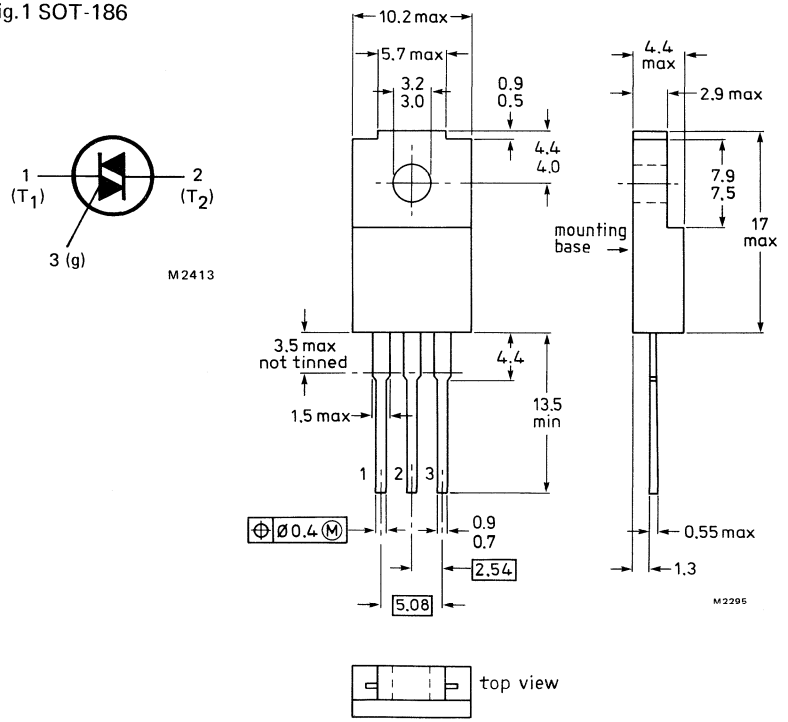

Net mass: 2 g.

The mounting base is electrically isolated from all terminals.

Accessories supplied on request (see data sheets Mounting instructions for F-pack devices and Accessories for SOT-186 envelopes).

RATINGS

Limiting values in accordance with the Absolute Maximum System (IEC 134).

Voltages (in either direction)			BT136F–500	600	700	800	
Non-repetitive peak off-state voltage† ($t \leqslant 10$ ms)	V_{DSM}	max.	500*	600*	700*	800	V
Repetitive peak off-state voltage ($\delta \leqslant 0.01$)†	V_{DRM}	max.	500	600	700	800	V
Crest working off-state voltage	V_{DWM}	max.	400	400	400	400	V

Currents (in either direction)				
RMS on-state current (conduction angle 360°) up to T_h = 86 °C	$I_{T(RMS)}$	max.	4	A
Repetitive peak on-state current	I_{TRM}	max.	25	A
Non-repetitive peak on-state current; T_j = 120 °C prior to surge; full sinewave				
t = 20 ms	I_{TSM}	max.	25	A
t = 16.7 ms	I_{TSM}	max.	30	A
I^2t for fusing (t = 10 ms)	I^2t	max.	4	A^2s
Rate of rise of on-state current after triggering with I_G = 200 mA to I_T = 6 A; dI_G/dt = 0.2 A/μs	dI_T/dt	max.	10	A/μs
Gate to terminal 1				
Power dissipation				
Average power dissipation (averaged over any 20 ms period)	$P_{G(AV)}$	max.	0.5	W
Peak power dissipation	P_{GM}	max.	5	W
Temperatures				
Storage temperature	T_{stg}		−40 to +125	°C
Operating junction temperature				
full-cycle operation	T_j	max.	120	°C
half-cycle operation	T_j	max.	110	°C

ISOLATION

From all three terminals to external heatsink (peak)**	$V_{(isol)M}$	min.	1500	V
Capacitance from T_2 to external heatsink	$C_{(isol)}$	typ.	12	pF

†For BT136F–500D/600D use $R_{(G-T_1)}$ = 1 kΩ.

*Although not recommended, off-state voltages up to 800 V may be applied without damage, but the triac may switch into the on-state. The rate of rise of on-state current should not exceed 3 A/μs.

**Measured with relative humidity <65% under clean and dust-free conditions.

THERMAL RESISTANCE

1. Heatsink mounted with clip (see mounting instructions)

Thermal resistance from junction to external heatsink

With heatsink compound	$R_{th\ j\text{-}h}$	=	5.5	K/W
Without heatsink compound	$R_{th\ j\text{-}h}$	=	7.2	K/W

2. Free-air operation

The quoted values of $R_{th\ j\text{-}a}$ should be used only when no leads of other dissipating components run to the same tie-point.

Thermal resistance from junction to ambient in free air: mounted on a printed-circuit board at any lead length	$R_{th\ j\text{-}a}$	=	55	K/W

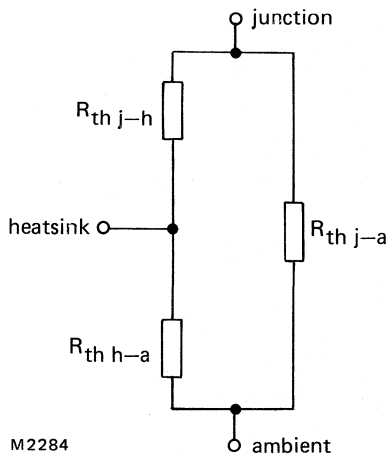

Fig.2 Components of thermal resistance.

CHARACTERISTICS (T_j = 25 °C unless otherwise stated)

Polarities, positive or negative, are identified with respect to T_1.

Voltages and currents (in either direction)

On-state voltage (measured under pulse conditions to prevent excessive dissipation)				
I_T = 5 A	V_T	<	1.70	V
Rate of rise of off-state voltage that will not trigger any device; T_j = 120 °C; gate open circuit				
BT136F series	dV_D/dt	<	100	V/µs
BT136F series G	dV_D/dt	<	200	V/µs
BT136F series F	dV_D/dt	<	50	V/µs
BT136F series E	dV_D/dt	typ.	50	V/µs
BT136F–500D/600D ($R_{(G-T_1)}$ = 1kΩ)	dV_D/dt	typ.	5	V/µs
Rate of change of commutating voltage that will not trigger any device when $-dI_{com}/dt$ = 1.8 A/ms; $I_{T(RMS)}$ = 4 A; T_h = 70 °C; gate open circuit; $V_D = V_{DWMmax}$				
BT136F series	dV_{com}/dt	typ.	10	V/µs
BT136F series G	dV_{com}/dt	<	10	V/µs
BT136F series F	dV_{com}/dt	typ.	10	V/µs
Off-state current				
$V_D = V_{DWMmax}$; T_j = 120 °C	I_D	<	0.5	mA
Gate voltage that will trigger all devices	V_{GT}	>	1.5	V
Gate voltage that will not trigger any device $V_D = V_{DWMmax}$; T_j = 120 °C; T_2 and G positive or negative	V_{GD}	<	250	mV

Gate current that will trigger all devices (I_{GT}); G to T_1

Holding current (I_H) Latching current (I_L); V_D = 12 V			T_2+ G+	T_2+ G–	$T_2–$ G–	$T_2–$ G+	
BT136F series	I_{GT}	>	35	35	35	70	mA
	I_H	<	15	15	15	15	mA
	I_L	<	20	30	20	30	mA
BT136F series G	I_{GT}	>	50	50	50	100	mA
	I_H	<	30	30	30	30	mA
	I_L	<	30	45	30	45	mA
BT136F series F	I_{GT}	>	25	25	25	70	mA
	I_H	<	15	15	15	15	mA
	I_L	<	20	30	20	30	mA
BT136F series E	I_{GT}	>	10	10	10	25	mA
	I_H	<	15	15	15	15	mA
	I_L	<	15	20	15	20	mA
BT136F–500D/600D	I_{GT}	>	5	5	5	10	mA
	I_H	<	10	10	10	10	mA
	I_L	<	10	15	10	15	mA

MOUNTING INSTRUCTIONS

1. The triac may be soldered directly into the circuit, but the maximum permissible temperature of the soldering iron or bath is 275 °C; it must not be in contact with the joint for more than 5 seconds. Soldered joints must be at least 4.7 mm from the seal.
2. The leads should not be bent less than 2.4 mm from the seal, and should be supported during bending. The leads can be bent, twisted or straightened by 90° maximum. The minimum bending radius is 1 mm.
3. Mounting by means of a spring clip is the best mounting method because it offers good thermal contact under the crystal area and slightly lower $R_{th\ j\text{-}h}$ values than screw mounting. However, if a screw is used, it should be M3 cross-recess pan-head. Care should be taken to avoid damage to the plastic body.
4. For good thermal contact heatsink compound should be used between mounting base and heatsink. Values of $R_{th\ j\text{-}h}$ given for mounting with heatsink compound refer to the use of a metallic-oxide loaded compound. Ordinary silicone grease is not recommended.
5. Rivet mounting is not recommended.
6. The heatsink must have a flatness in the mounting area of 0.02 mm maximum per 10 mm. Mounting holes must be deburred.

FULL-WAVE CONDUCTION (with heatsink compound)

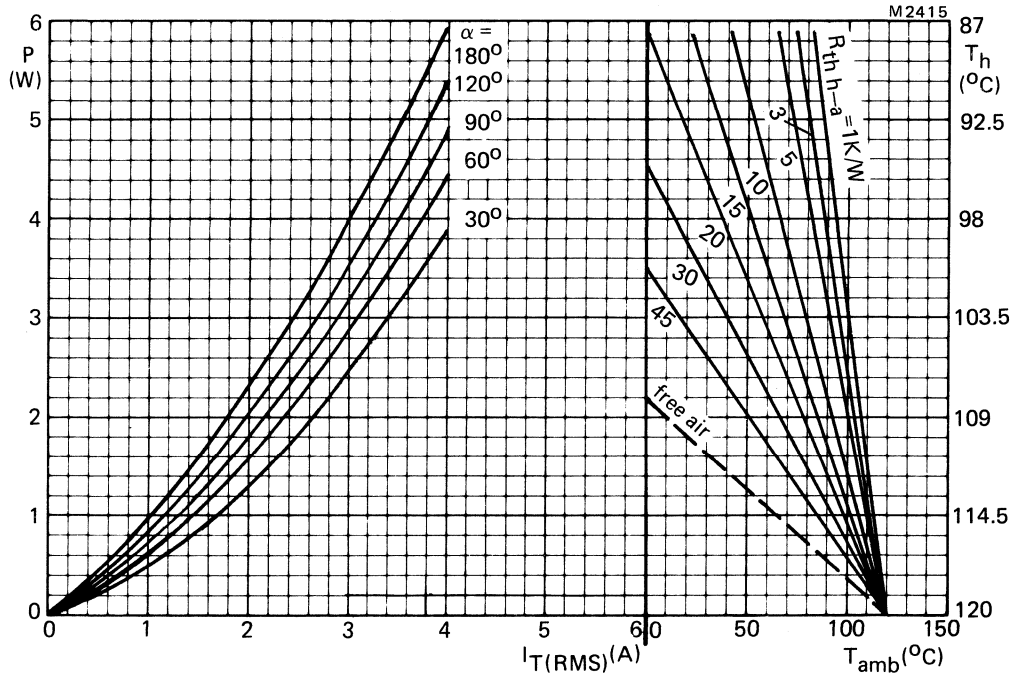

Fig.3 The right-hand part shows the interrelationship between the power (derived from the left-hand part) and the maximum permissible temperatures.

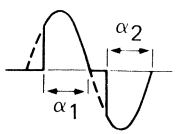

$\alpha = \alpha_1 = \alpha_2$: conduction angle per half cycle

OPERATING NOTES

Dissipation and heatsink considerations:

a. The method of using Figs.3 and 4 is as follows:

Starting with the required current on the $I_{T(AV)}$ or $I_{T(RMS)}$ axis, trace upwards to meet the appropriate form factor or conduction angle curve. Trace horizontally and upwards from the appropriate value on the T_{amb} scale. The intersection determines the $R_{th\ mb\text{-}a}$. The heatsink thermal resistance value ($R_{th\ h\text{-}a}$) can now be calculated from:

$R_{th\ h\text{-}a} = R_{th\ mb\text{-}a} - R_{th\ mb\text{-}h}$.

b. Any measurement of heatsink temperature should be made immediately adjacent to the device.

FULL-WAVE CONDUCTION (without heatsink compound)

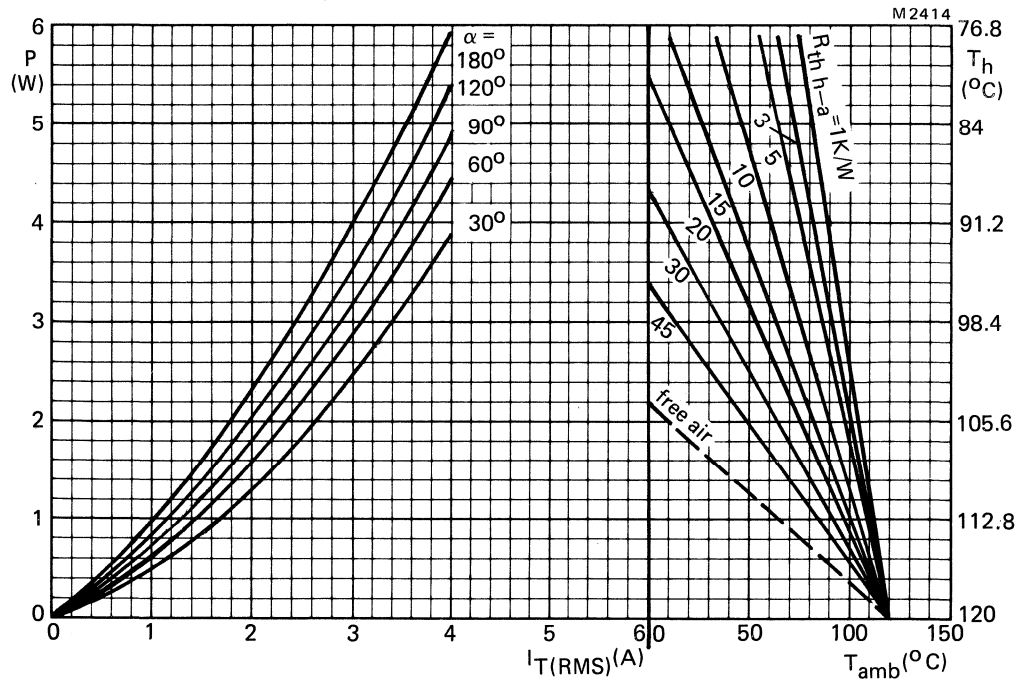

Fig.4 The right-hand part shows the interrelationship between the power (derived from the left-hand part) and the maximum permissible temperatures.

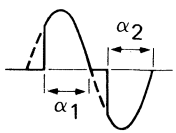

$\alpha = \alpha_1 = \alpha_2$: conduction angle per half cycle

OVERLOAD OPERATION

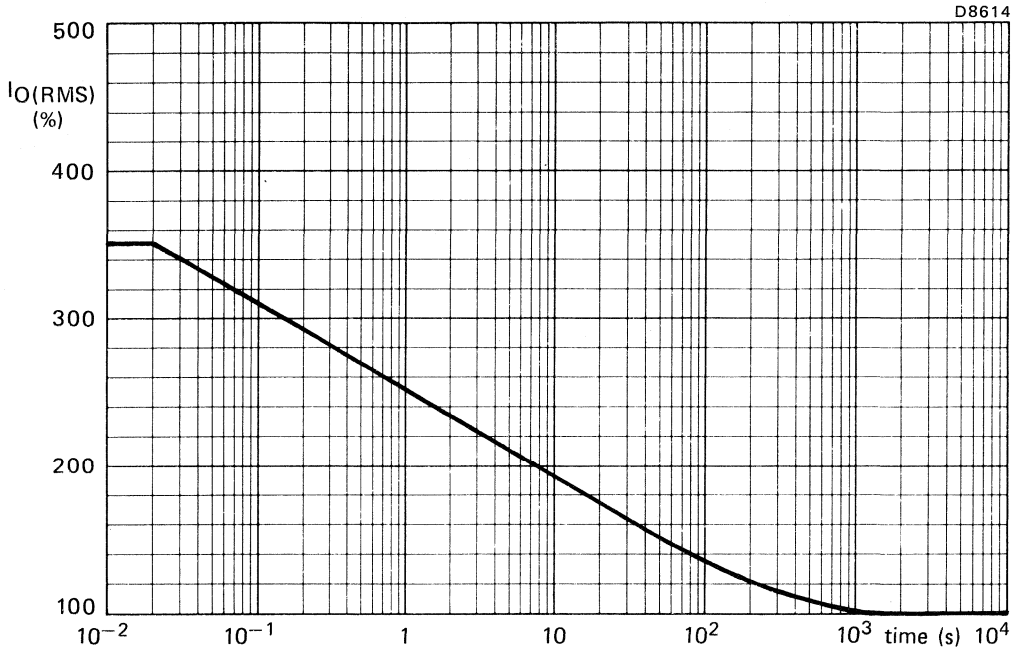

Fig.5 Maximum permissible duration of steady overload (provided that T_h does not exceed 120 °C during and after overload) expressed as a percentage of the steady state r.m.s. rated current. For high r.m.s. overload currents precautions should be taken so that the temperature of the terminals does not exceed 125 °C. During these overload conditions the triac may lose control. Therefore the overload should be terminated by a separate protection device.

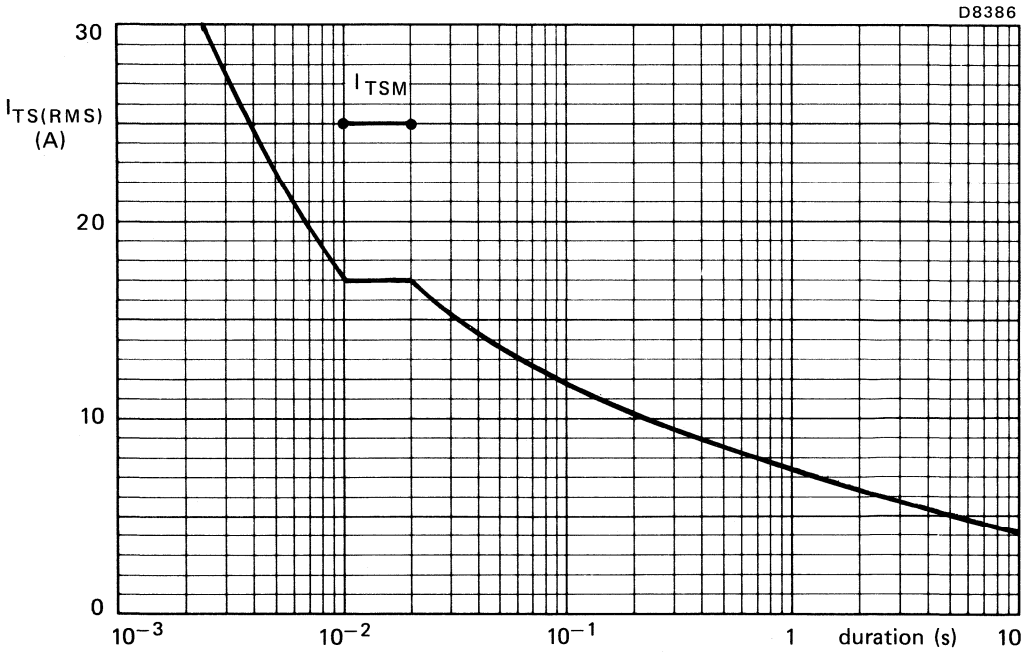

Fig.6 Maximum permissible non-repetitive r.m.s. on-state current based on sinusoidal currents (f = 50 Hz); T_j = 120 °C prior to surge. The triac may temporarily lose control following the surge.

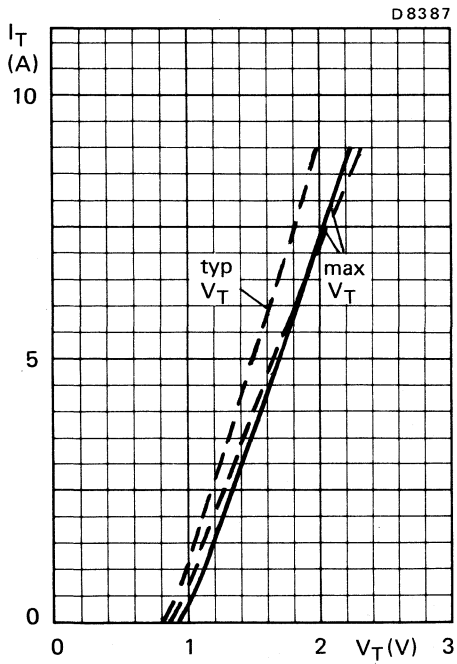

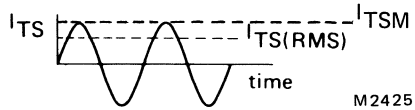

Fig.7 On-state voltage drop (V_T) versus on-state current (I_T);
—— T_j = 25 °C; – – – T_j = 120 °C.

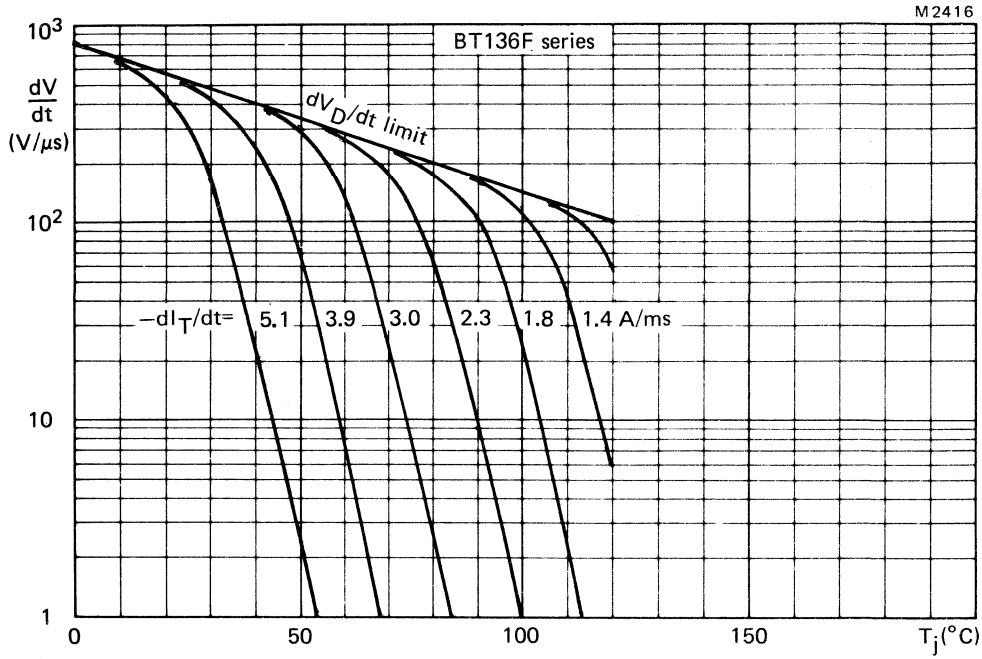

Fig.8 Typical commutation dV/dt for BT136F series versus T_j. The triac should commutate when the dV/dt is below the value on the appropriate curve for pre-commutation dI_T/dt.

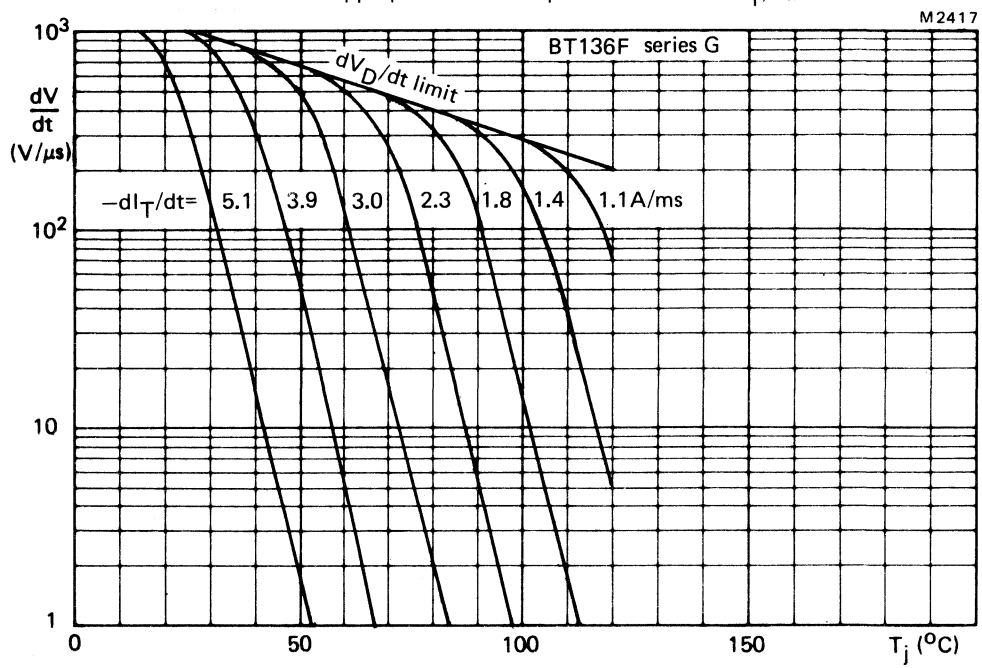

Fig.9 Limit commutation dV/dt for BT136F series G versus T_j. The triac should commutate when the dV/dt is below the value on the appropriate curve for pre-commutation dI_T/dt.

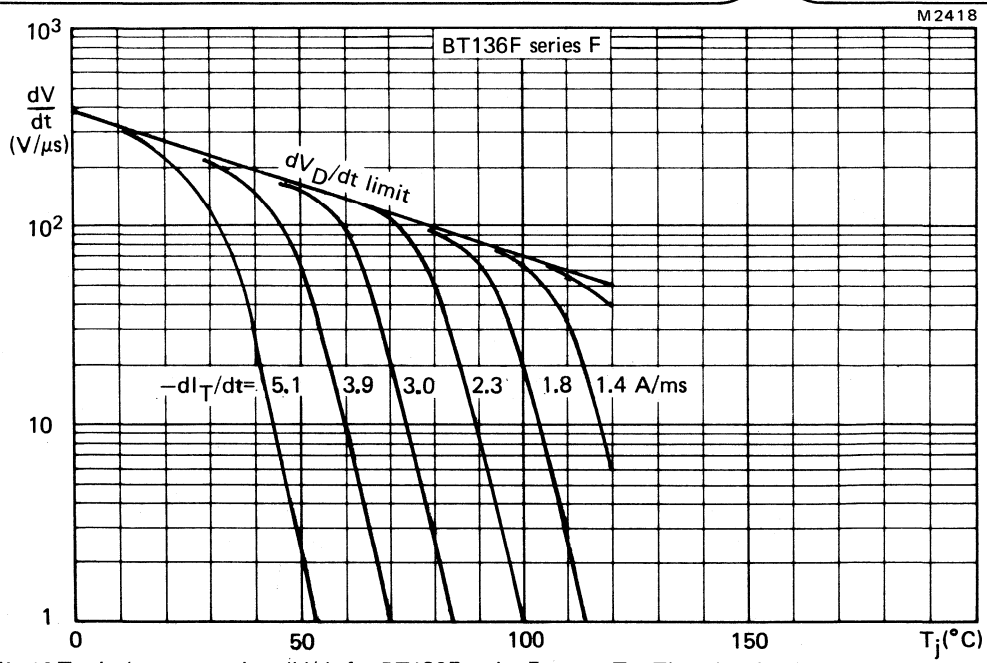

Fig.10 Typical commutation dV/dt for BT136F series F versus T_j. The triac should commutate when the dV/dt is below the value on the appropriate curve for pre-commutation dI_T/dt.

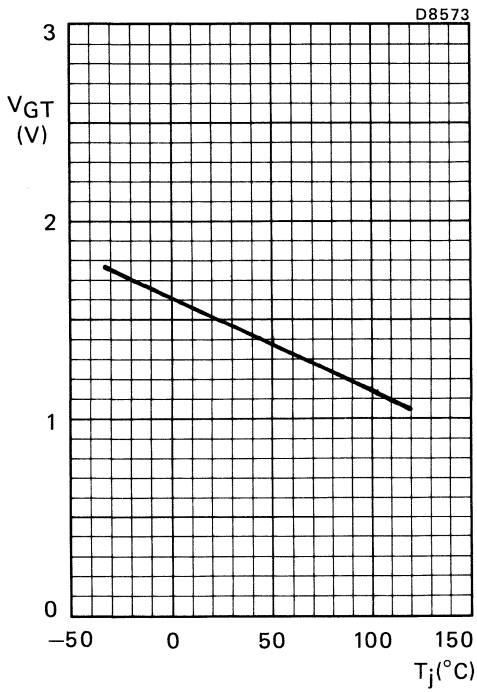

Fig.11 Minimum gate voltage that will trigger all devices; all conditions.

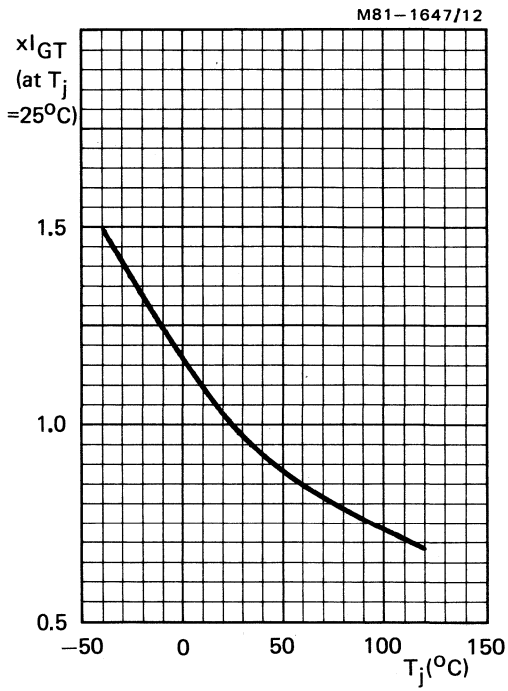

Fig.12 Normalised gate current that will trigger all devices; all conditions.

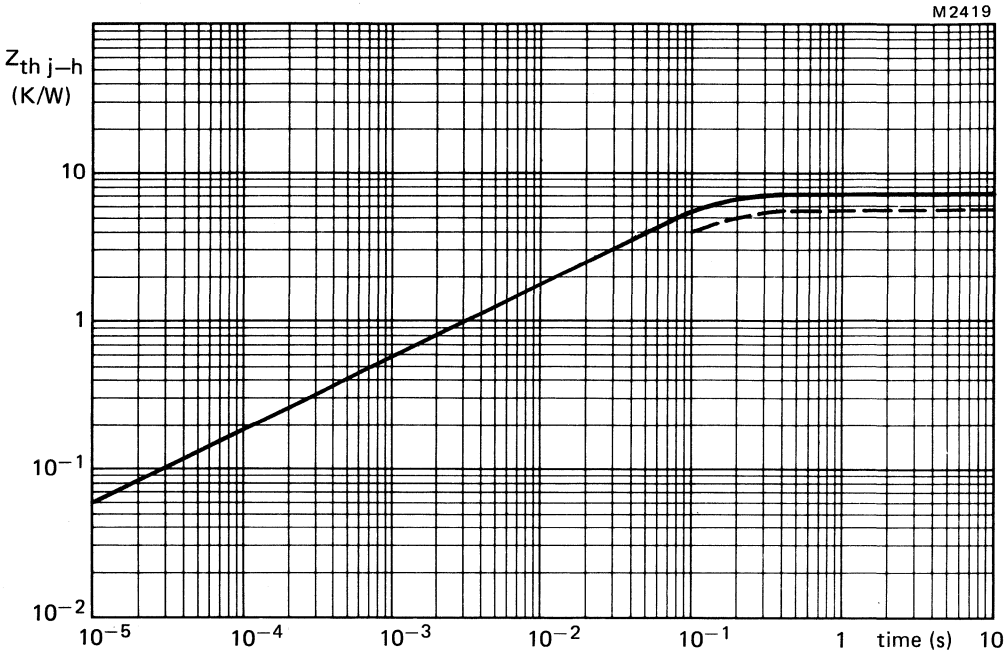

Fig.13 Transient thermal impedance, — — — with heatsink compound; —— without heatsink compound.

TRIACS

Glass-passivated 8 ampere triacs intended for use in applications requiring high bidirectional transient and blocking voltage capability and high thermal cycling performance with very low thermal resistances. These triacs feature a high surge current capability and a range of gate current sensitivities between 5 and 50 mA. Typical applications include AC power control circuits such as motor, industrial lighting, industrial and domestic heating control and static switching systems.

QUICK REFERENCE DATA

			BT137–500	600	700	800	
Repetitive peak off-state voltage	V_{DRM}	max.	500	600	700	800	V
RMS on-state current	$I_{T(RMS)}$	max.		8			A
Non-repetitive peak on-state current							
at 50 Hz	I_{TSM}	max.		55			A
at 60 Hz	I_{TSM}	max.		60			A

MECHANICAL DATA

Dimensions in mm

Fig.1 TO–220AB

Pinning:

1 = Terminal 1

2 = Terminal 2

3 = Gate

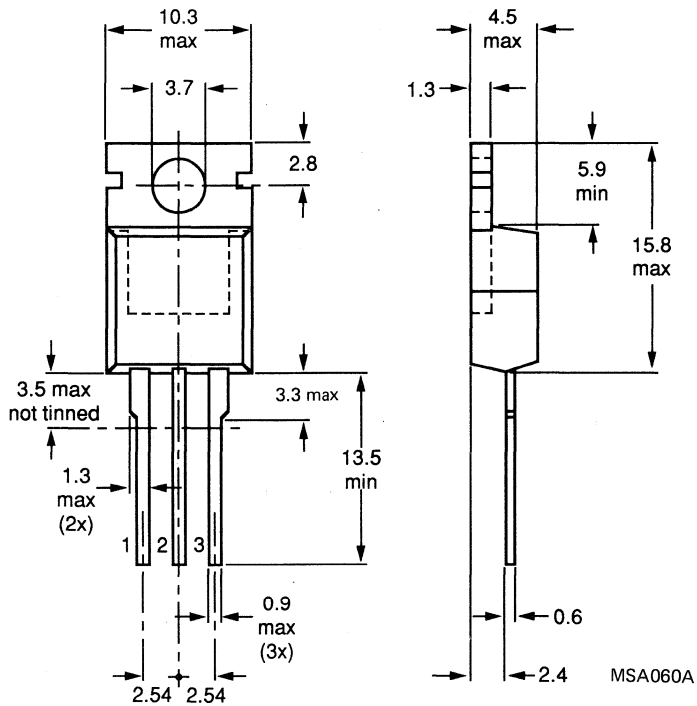

Net mass: 2 g

Note: The exposed metal mounting base is directly connected to terminal T_2.

Supplied on request: accessories (see data sheets Mounting instructions and accessories for TO–220 envelopes).

RATINGS

Limiting values in accordance with the Absolute Maximum System (IEC 134).

Voltages (in either direction)			BT137–500	600	700	800	
Non-repetitive peak off-state voltage ($t \leqslant 10$ ms)†	V_{DSM}	max.	500*	600*	700*	800	V
Repetitive peak off-state voltage ($\delta \leqslant 0.01$)†	V_{DRM}	max.	500	600	700	800	V
Crest working off-state voltage	V_{DWM}	max.	400	400	400	400	V

Currents (in either direction)				
RMS on-state current (conduction angle 360°) up to T_{mb} = 97 °C	$I_{T(RMS)}$	max.	8	A
Repetitive peak on-state current	I_{TRM}	max.	55	A
Non-repetitive peak on-state current; T_j = 120 °C prior to surge; full sinewave				
t = 20 ms	I_{TSM}	max.	55	A
t = 16.7 ms	I_{TSM}	max.	60	A
I^2t for fusing (t = 10 ms)	I^2t	max.	15	A^2s
Rate of rise of on-state current after triggering with I_G = 200 mA to I_T = 12 A; dI_G/dt = 0.2 A/μs	dI_T/dt	max.	20	A/μs

Gate to terminal 1

Power dissipation				
Average power dissipation (averaged over any 20 ms period)	$P_{G(AV)}$	max.	0.5	W
Peak power dissipation	P_{GM}	max.	5	W

Temperatures				
Storage temperature	T_{stg}		−40 to +125	°C
Operating junction temperature				
full-cycle operation	T_j	max.	120	°C
half-cycle operation	T_j	max.	110	°C

†For BT137–500D/600D use $R_{(G-T_1)}$ = 1 kΩ.

*Although not recommended, off-state voltages up to 800 V may be applied without damage, but the triac may switch into the on-state. The rate of rise of on-state current should not exceed 6 A/μs.

THERMAL RESISTANCE

From junction to mounting base

full-cycle operation	$R_{th\ j\text{-}mb}$	=	2.0 K/W
half-cycle operation	$R_{th\ j\text{-}mb}$	=	2.4 K/W
Transient thermal impedance; t = 1 ms	$Z_{th\ j\text{-}mb}$	=	0.3 K/W

Influence of mounting method

1. Heatsink mounted with clip (see mounting instructions)

Thermal resistance from mounting base to heatsink

a. with heatsink compound	$R_{th\ mb\text{-}h}$	=	0.3 K/W
b. with heatsink compound and 0.06 mm maximum mica insulator	$R_{th\ mb\text{-}h}$	=	1.4 K/W
c. with heatsink compound and 0.1 mm max. mica insulator (56369)	$R_{th\ mb\text{-}h}$	=	2.2 K/W
d. with heatsink compound and 0.25 mm max. alumina insulator (56367)	$R_{th\ mb\text{-}h}$	=	0.8 K/W
e. without heatsink compound	$R_{th\ mb\text{-}h}$	=	1.4 K/W

2. Free-air operation

The quoted values of $R_{th\ j\text{-}a}$ should be used only when no leads of other dissipating components run to the same tie-point.

Thermal resistance from junction to ambient in free air: mounted on a printed-circuit board at any lead length	$R_{th\ j\text{-}a}$	=	60 K/W

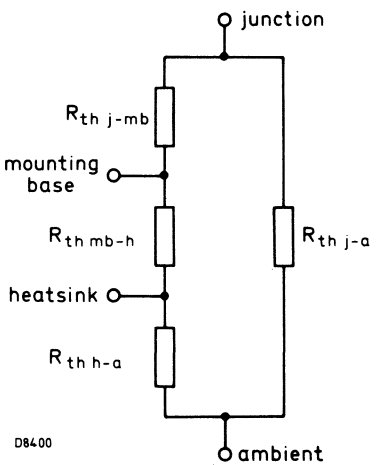

Fig.2 Components of thermal resistance.

CHARACTERISTICS (T_j = 25 °C unless otherwise stated)

Polarities, positive or negative, are identified with respect to T_1.

Voltages and currents (in either direction)

On-state voltage (measured under pulse conditions to prevent excessive dissipation)				
I_T = 10 A	V_T	<	1.65	V
Rate of rise of off-state voltage that will not trigger any device; T_j = 120 °C; gate open circuit				
BT137 series	dV_D/dt	<	100	V/µs
BT137 series G	dV_D/dt	<	200	V/µs
BT137 series F	dV_D/dt	<	50	V/µs
BT137 series E	dV_D/dt	typ.	50	V/µs
BT137–500D/600D ($R_{(G-T_1)}$ = 1kΩ)	dV_D/dt	typ.	5	V/µs
Rate of change of commutating voltage that will not trigger any device when $-dI_{com}/dt$ = 3.6 A/ms; $I_{T(RMS)}$ = 8 A; T_{mb} = 70 °C; gate open circuit ; $V_D = V_{DWMmax}$				
BT137 series	dV_{com}/dt	typ.	10	V/µs
BT137 series G	dV_{com}/dt	<	10	V/µs
BT137 series F	dV_{com}/dt	typ.	10	V/µs
Off-state current				
$V_D = V_{DWMmax}$; T_j = 120 °C	I_D	<	0.5	mA
Gate voltage that will trigger all devices	V_{GT}	>	1.5	V
Gate voltage that will not trigger any device $V_D = V_{DWMmax}$; T_j = 120 °C; T_2 and G positive or negative	V_{GD}	<	250	mV

Gate current that will trigger all devices (I_{GT}); G to T_1

Holding current (I_H)

Latching current (I_L); V_D = 12 V

			T_2^+ G+	T_2^+ G−	T_2^- G−	T_2^- G+	
BT137 series	I_{GT}	>	35	35	35	70	mA
	I_H	<	20	20	20	20	mA
	I_L	<	30	45	30	45	mA
BT137 series G	I_{GT}	>	50	50	50	100	mA
	I_H	<	40	40	40	40	mA
	I_L	<	45	60	45	60	mA
BT137 series F	I_{GT}	>	25	25	25	70	mA
	I_H	<	20	20	20	20	mA
	I_L	<	30	45	30	45	mA
BT137 series E	I_{GT}	>	10	10	10	25	mA
	I_H	<	20	20	20	20	mA
	I_L	<	25	35	25	35	mA
BT137–500D/600D	I_{GT}	>	5	5	5	10	mA
	I_H	<	15	15	15	15	mA
	I_L	<	15	20	15	20	mA

MOUNTING INSTRUCTIONS

1. The device may be soldered directly into the circuit, but the maximum permissible temperature of the soldering iron or bath is 275 °C; it must not be in contact with the joint for more than 5 seconds. Soldered joints must be at least 4.7 mm from the seal.
2. The leads should not be bent less than 2.4 mm from the seal, and should be supported during bending. The leads can be bent, twisted or straightened by 90° maximum. The minimum bending radius is 1 mm.
3. It is recommended that the circuit connection be made to tag T_2, rather than direct to the heatsink.
4. Mounting by means of a spring clip is the best mounting method because it offers:
   a. a good thermal contact under the crystal area and slightly lower $R_{th\ mb\text{-}h}$ values than screw mounting.
   b. safe isolation for mains operation.
   However, if a screw is used, it should be M3 cross-recess pan-head. Care should be taken to avoid damage to the plastic body.
5. For good thermal contact, heatsink compound should be used between mounting base and heatsink. Values of $R_{th\ mb\text{-}h}$ given for mounting with heatsink compound refer to the use of a metallic-oxide loaded compound. Ordinary silicone grease is not recommended.
6. Rivet mounting (only possible for non-insulated mounting)
   Devices may be rivetted to flat heatsinks; such a process must neither deform the mounting tab, nor enlarge the mounting hole. The maximum recommended hole size for rivet mounting is 3.5mm. The pre-formed head of the rivet should be on the device side and any rivet tool used should not damage the plastic body of the device.
7. The heatsink must have a flatness in the mounting area of 0.02 mm maximum per 10 mm. Mounting holes must be deburred.

FULL-CYCLE OPERATION

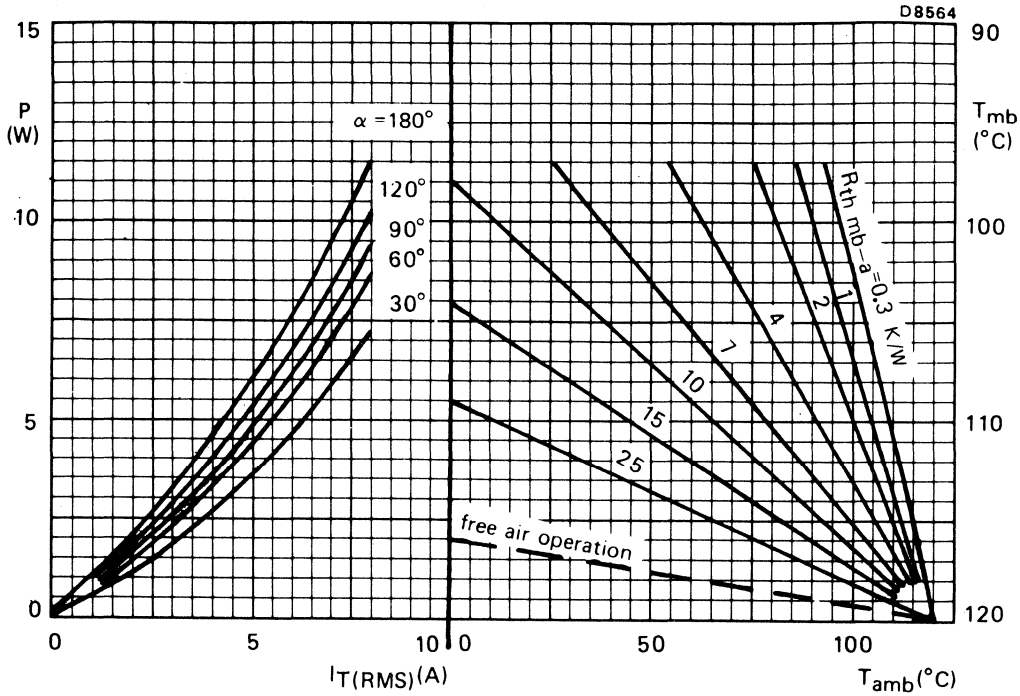

Fig.3 The right-hand part shows the interrelationship between the power (derived from the left-hand part) and the maximum permissible temperatures.

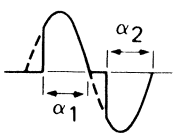

$\alpha = \alpha_1 = \alpha_2$: conduction angle per half cycle

OPERATING NOTES

Dissipation and heatsink considerations:

a. The method of using Fig.3 is as follows:
Starting with the required current on the $I_{T(AV)}$ or $I_{T(RMS)}$ axis, trace upwards to meet the appropriate form factor or conduction angle curve. Trace horizontally and upwards from the appropriate value on the T_{amb} scale. The intersection determines the $R_{th\ mb-a}$. The heatsink thermal resistance value ($R_{th\ h-a}$) can now be calculated from:

$R_{th\ h-a} = R_{th\ mb-a} - R_{th\ mb-h}$.

b. Any measurement of heatsink temperature should be made immediately adjacent to the device.

OVERLOAD OPERATION

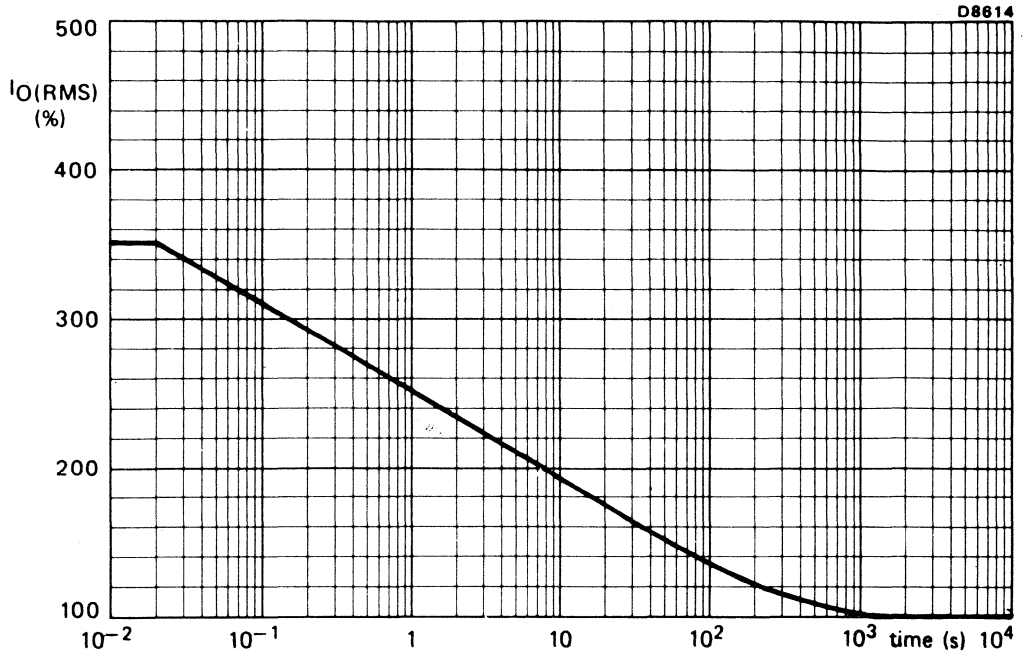

Fig.4 Maximum permissible duration of steady overload (provided that T_{mb} does not exceed 120 °C during and after overload) expressed as a percentage of the steady state r.m.s. rated current. For high r.m.s. overload currents precautions should be taken so that the temperature of the terminals does not exceed 125 °C. During these overload conditions the triac may lose control. Therefore the overload should be terminated by a separate protection device.

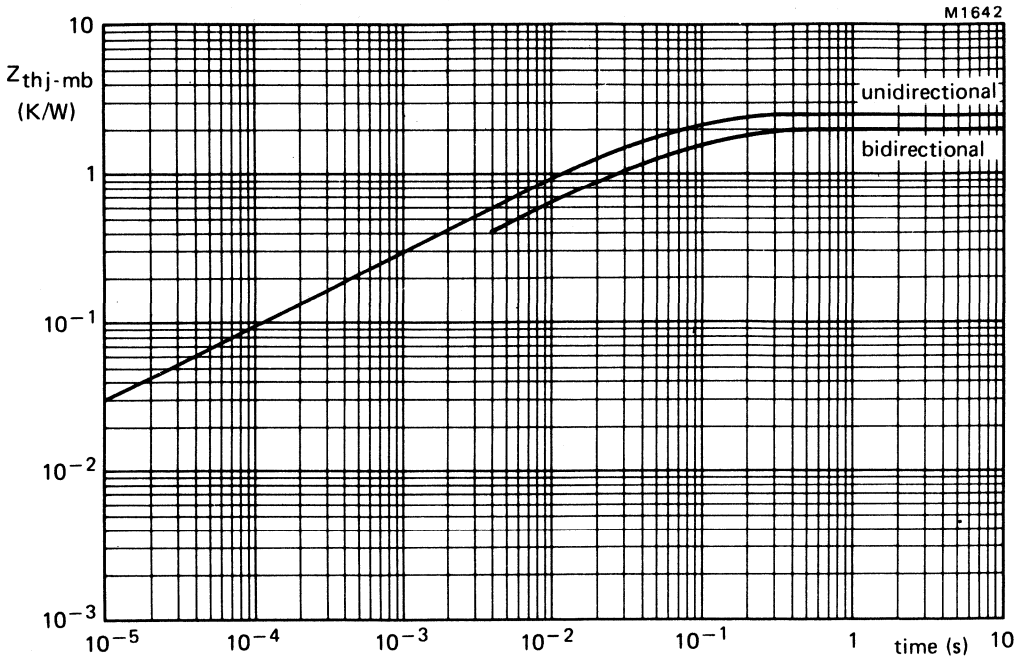

Fig.5 Thermal impedance as a function of dissipation time.

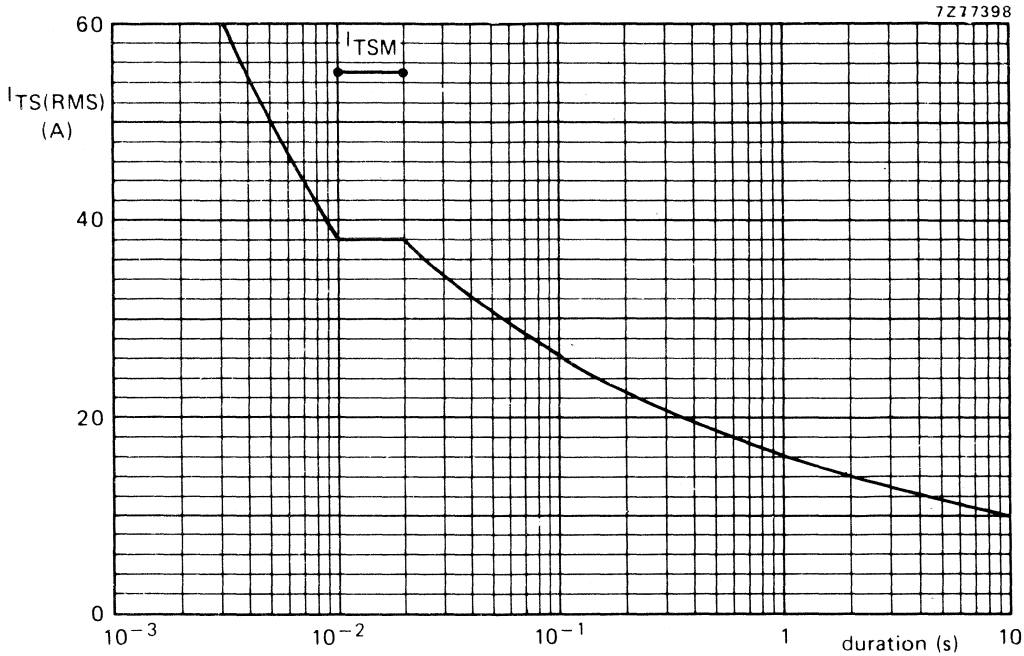

Fig.6 Maximum permissible non-repetitive r.m.s. on-state current based on sinusoidal currents (f = 50 Hz); T_j = 120 °C prior to surge. The triac may temporarily lose control following the surge.

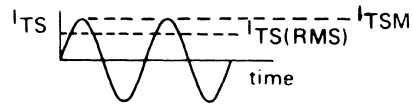

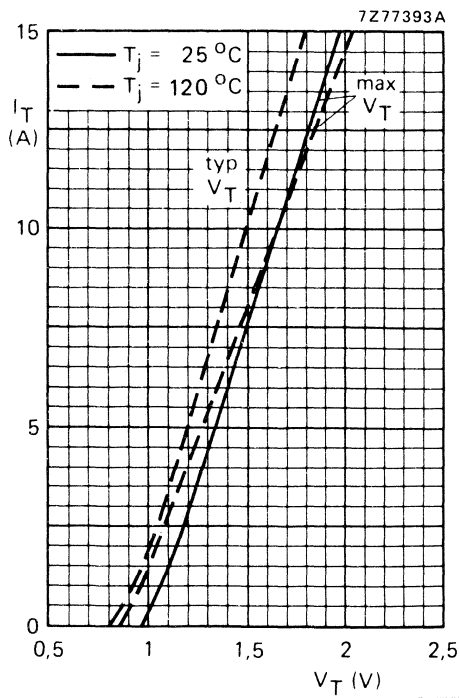

Fig.7 On–state voltage drop (V_T) versus on–state current (I_T).

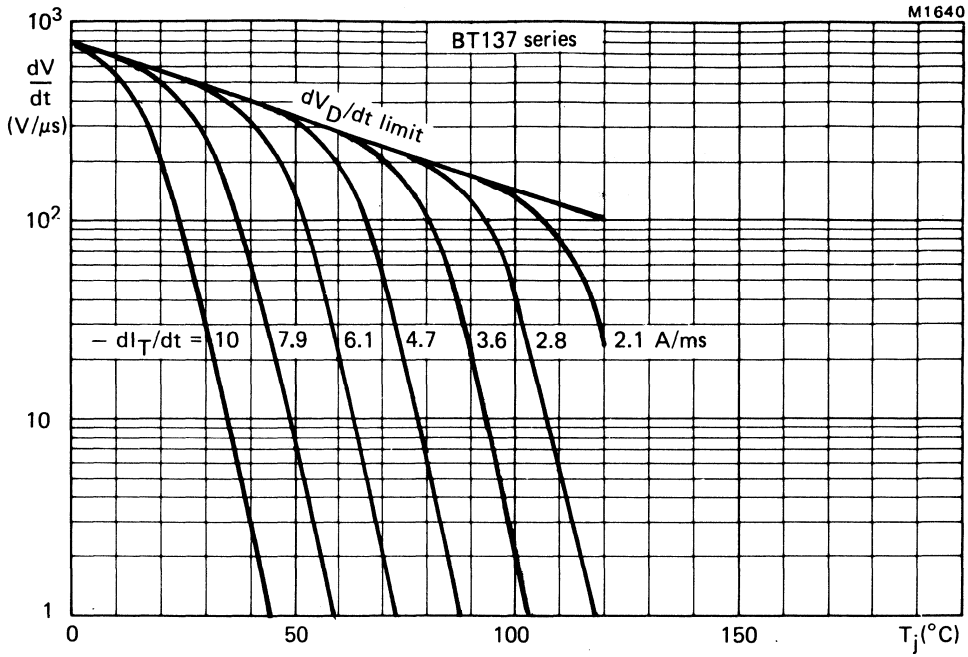

Fig.8 Typical commutation dV/dt for BT137 series versus T_j. The triac should commutate when the dV/dt is below the value on the appropriate curve for pre-commutation dI_T/dt.

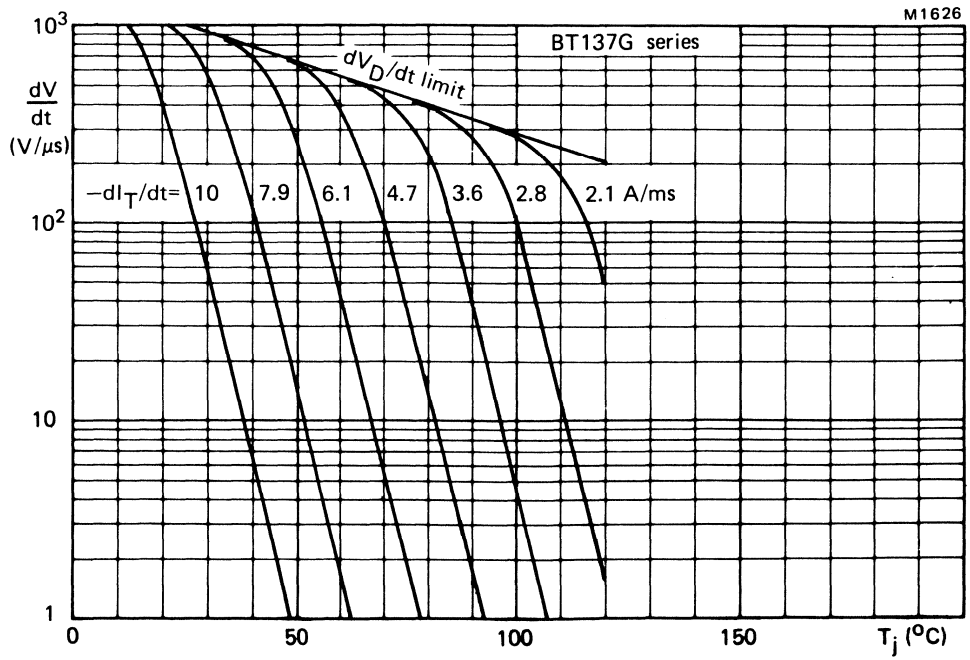

Fig.9 Limit commutation dV/dt for BT137G series versus T_j. The triac should commutate when the dV/dt is below the value on the appropriate curve for pre-commutation dI_T/dt.

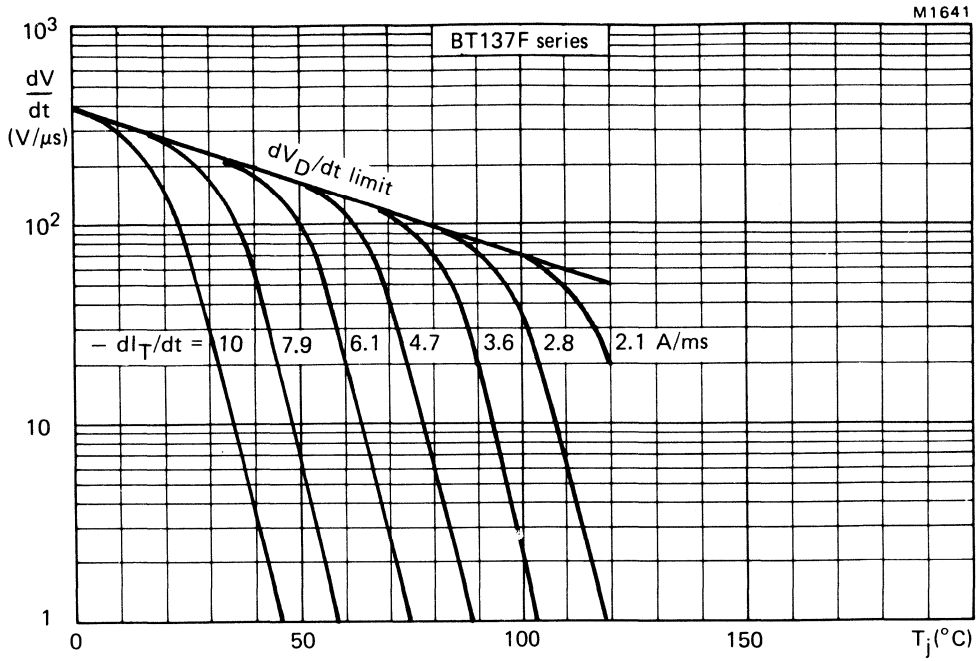

Fig.10 Typical commutation dV/dt for BT137F series versus T_j. The triac should commutate when the dV/dt is below the value on the appropriate curve for pre-commutation dI_T/dt.

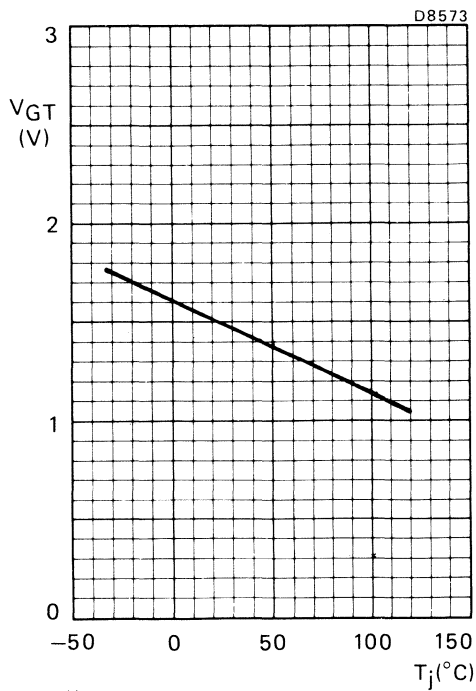

Fig.11 Minimum gate voltage that will trigger all devices; all conditions.

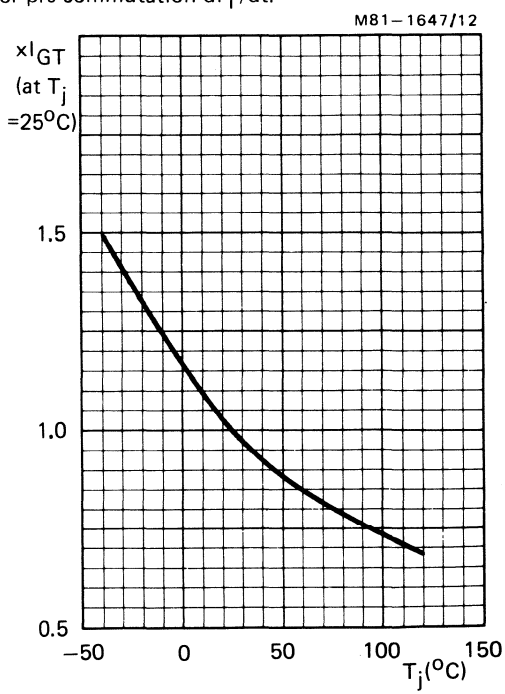

Fig.12 Normalised gate current that will trigger all devices; all conditions.

FULL-PACK TRIACS

Glass-passivated 8 ampere triacs in SOT-186 envelopes, which feature an electrically isolated mounting base. They are intended for use in applications requiring high bidirectional transient and blocking voltage capability. These triacs feature a high surge current capability and a range of gate current sensitivities between 5 and 50 mA. Typical applications include AC power control circuits such as motor, industrial lighting, industrial and domestic heating control and static switching systems.

QUICK REFERENCE DATA

			BT137F–500	600	700	800	
Repetitive peak off-state voltage	V_{DRM}	max.	500	600	700	800	V
RMS on-state current	$I_{T(RMS)}$	max.		8			A
Non-repetitive peak on-state current							
at 50 Hz	I_{TSM}	max.		55			A
at 60 Hz	I_{TSM}	max.		60			A

MECHANICAL DATA

Dimensions in mm

Fig.1 SOT-186

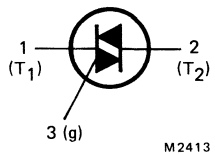

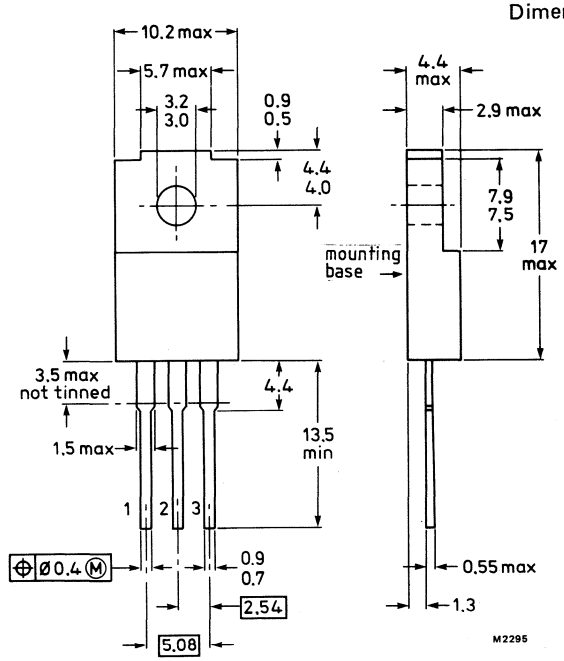

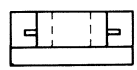

Net mass: 2 g.

The mounting base is electrically isolated from all terminals.

Accessories supplied on request (see data sheets Mounting instructions for F-pack devices and Accessories for SOT-186 envelopes).

RATINGS

Limiting values in accordance with the Absolute Maximum System (IEC 134).

Voltages (in either direction)			BT137F–500	600	700	800	
Non-repetitive peak off-state voltage† ($t \leqslant 10$ ms)	V_{DSM}	max.	500*	600*	700*	800	V
Repetitive peak off-state voltage ($\delta \leqslant 0.01$)†	V_{DRM}	max.	500	600	700	800	V
Crest working off-state voltage	V_{DWM}	max.	400	400	400	400	V

Currents (in either direction)				
RMS on-state current (conduction angle 360°) up to T_h = 71 °C	$I_{T(RMS)}$	max.	8	A
Repetitive peak on-state current	I_{TRM}	max.	55	A
Non-repetitive peak on-state current; T_j = 120 °C prior to surge; full sinewave				
t = 20 ms	I_{TSM}	max.	55	A
t = 16.7 ms	I_{TSM}	max.	60	A
I^2t for fusing (t = 10 ms)	I^2t	max.	15	A^2s
Rate of rise of on-state current after triggering with I_G = 200 mA to I_T = 12 A; dI_G/dt = 0.2 A/μs	dI_T/dt	max.	20	A/μs

Gate to terminal 1

Power dissipation				
Average power dissipation (averaged over any 20 ms period)	$P_{G(AV)}$	max.	0.5	W
Peak power dissipation	P_{GM}	max.	5	W

Temperatures				
Storage temperature	T_{stg}		−40 to +125	°C
Operating junction temperature				
full-cycle operation	T_j	max.	120	°C
half-cycle operation	T_j	max.	110	°C

ISOLATION

From all three terminals to external heatsink (peak)**	$V_{(isol)M}$	min.	1500	V
Capacitance from T_2 to external heatsink	$C_{(isol)}$	typ.	12	pF

†For BT137F–500D/600D use $R_{(G-T_1)}$ = 1 kΩ.

*Although not recommended, off-state voltages up to 800 V may be applied without damage, but the triac may switch into the on-state. The rate of rise of on-state current should not exceed 6 A/μs.

**Measured with relative humidity <65% under clean and dust-free conditions.

THERMAL RESISTANCE

1. Heatsink mounted with clip (see mounting instructions)

Thermal resistance from junction to external heatsink

With heatsink compound	$R_{th\ j\text{-}h}$	=	4.5	K/W
Without heatsink compound	$R_{th\ j\text{-}h}$	=	6.5	K/W

2. Free-air operation

The quoted values of $R_{th\ j\text{-}a}$ should be used only when no leads of other dissipating components run to the same tie-point.

Thermal resistance from junction to ambient in free air: mounted on a printed-circuit board at any lead length	$R_{th\ j\text{-}a}$	=	55	K/W

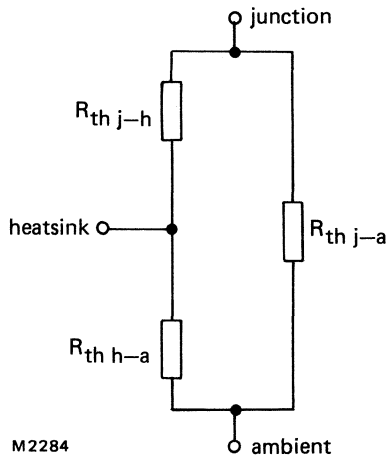

Fig.2 Components of thermal resistance.

CHARACTERISTICS (T_j = 25 °C unless otherwise stated)

Polarities, positive or negative, are identified with respect to T_1.

Voltages and currents (in either direction)

On-state voltage (measured under pulse conditions to prevent excessive dissipation)				
I_T = 10 A	V_T	<	1.65	V
Rate of rise of off-state voltage that will not trigger any device; T_j = 120 °C; gate open circuit				
BT137F series	dV_D/dt	<	100	V/µs
BT137F series G	dV_D/dt	<	200	V/µs
BT137F series F	dV_D/dt	<	50	V/µs
BT137F series E	dV_D/dt	typ.	50	V/µs
BT137F–500D/600D ($R_{(G-T_1)}$ = 1kΩ)	dV_D/dt	typ.	5	V/µs
Rate of change of commutating voltage that will not trigger any device when $-dI_{com}/dt$ = 3.6 A/ms; $I_{T(RMS)}$ = 8 A; T_h = 54 °C; gate open circuit; $V_D = V_{DWMmax}$				
BT137F series	dV_{com}/dt	typ.	10	V/µs
BT137F series G	dV_{com}/dt	<	10	V/µs
BT137F series F	dV_{com}/dt	typ.	10	V/µs
Off-state current				
$V_D = V_{DWMmax}$; T_j = 120 °C	I_D	<	0.5	mA
Gate voltage that will trigger all devices	V_{GT}	>	1.5	V
Gate voltage that will not trigger any device $V_D = V_{DWMmax}$; T_j = 120 °C; T_2 and G positive or negative	V_{GD}	<	250	mV

Gate current that will trigger all devices (I_{GT}); G to T_1

Holding current (I_H) / Latching current (I_L); V_D = 12 V			T_2+ G+	T_2+ G–	T_2- G–	T_2- G+	
BT137F series	I_{GT}	>	35	35	35	70	mA
	I_H	<	20	20	20	20	mA
	I_L	<	30	45	30	45	mA
BT137F series G	I_{GT}	>	50	50	50	100	mA
	I_H	<	40	40	40	40	mA
	I_L	<	45	60	45	60	mA
BT137F series F	I_{GT}	>	25	25	25	70	mA
	I_H	<	20	20	20	20	mA
	I_L	<	30	45	30	45	mA
BT137F series E	I_{GT}	>	10	10	10	25	mA
	I_H	<	20	20	20	20	mA
	I_L	<	25	35	25	35	mA
BT137F–500D/600D	I_{GT}	>	5	5	5	10	mA
	I_H	<	15	15	15	15	mA
	I_L	<	15	20	15	20	mA

MOUNTING INSTRUCTIONS

1. The triac may be soldered directly into the circuit, but the maximum permissible temperature of the soldering iron or bath is 275 °C; it must not be in contact with the joint for more than 5 seconds. Soldered joints must be at least 4.7 mm from the seal.
2. The leads should not be bent less than 2.4 mm from the seal, and should be supported during bending. The leads can be bent, twisted or straightened by 90° maximum. The minimum bending radius is 1 mm.
3. Mounting by means of a spring clip is the best mounting method because it offers good thermal contact under the crystal area and slightly lower $R_{th\ j\text{-}h}$ values than screw mounting. However, if a screw is used, it should be M3 cross-recess pan-head. Care should be taken to avoid damage to the plastic body.
4. For good thermal contact heatsink compound should be used between mounting base and heatsink. Values of $R_{th\ j\text{-}h}$ given for mounting with heatsink compound refer to the use of a metallic-oxide loaded compound. Ordinary silicone grease is not recommended.
5. Rivet mounting is not recommended.
6. The heatsink must have a flatness in the mounting area of 0.02 mm maximum per 10 mm. Mounting holes must be deburred.

FULL-WAVE CONDUCTION (with heatsink compound)

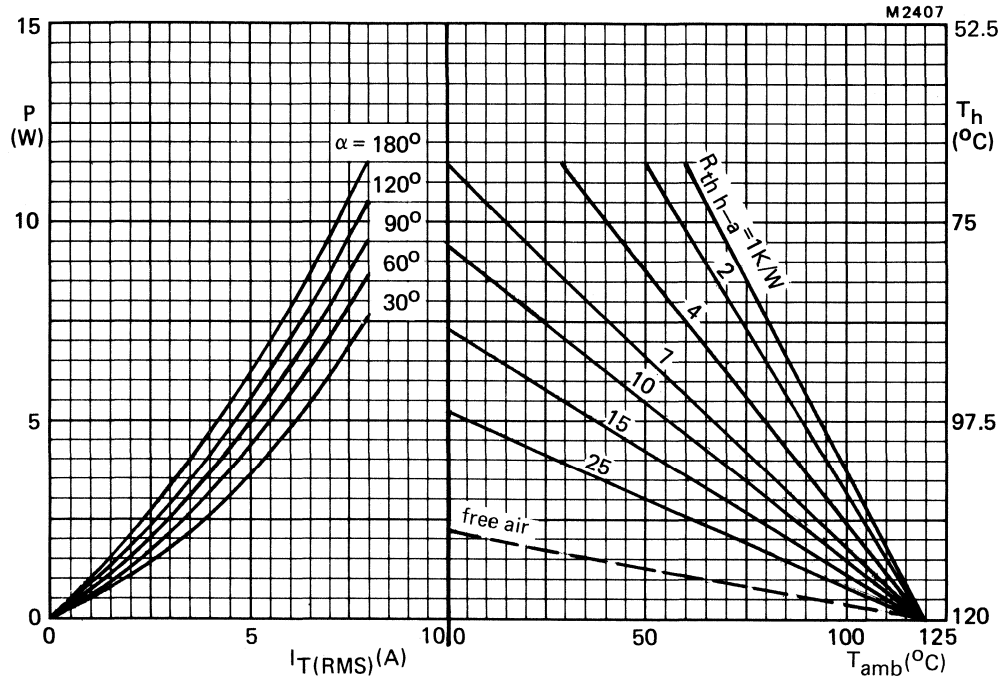

Fig.3 The right-hand part shows the interrelationship between the power (derived from the left-hand part) and the maximum permissible temperatures.

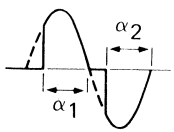

$\alpha = \alpha_1 = \alpha_2$: conduction angle per half cycle

OPERATING NOTES

Dissipation and heatsink considerations:

a. The method of using Figs.3 and 4 is as follows:

Starting with the required current on the $I_{T(AV)}$ or $I_{T(RMS)}$ axis, trace upwards to meet the appropriate form factor or conduction angle curve. Trace horizontally and upwards from the appropriate value on the T_{amb} scale. The intersection determines the $R_{th\ mb-a}$. The heatsink thermal resistance value ($R_{th\ h-a}$) can now be calculated from:

$R_{th\ h-a} = R_{th\ mb-a} - R_{th\ mb-h}$.

b. Any measurement of heatsink temperature should be made immediately adjacent to the device.

FULL-WAVE CONDUCTION (without heatsink compound)

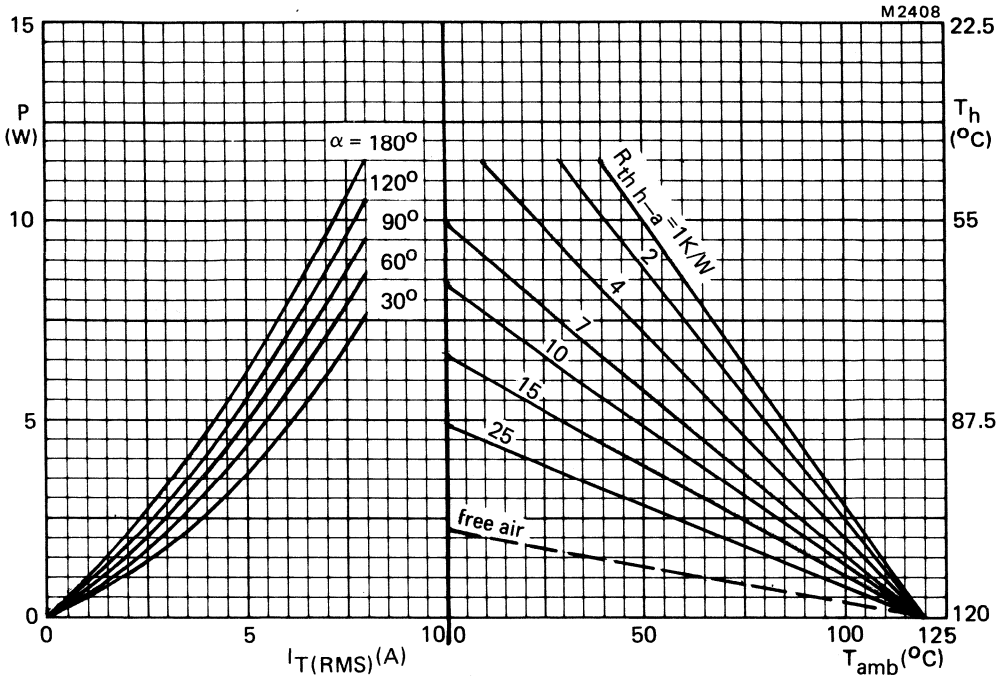

Fig.4 The right-hand part shows the interrelationship between the power (derived from the left-hand part) and the maximum permissible temperatures.

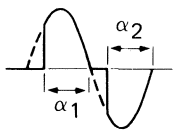

$\alpha = \alpha_1 = \alpha_2$: conduction angle per half cycle

OVERLOAD OPERATION

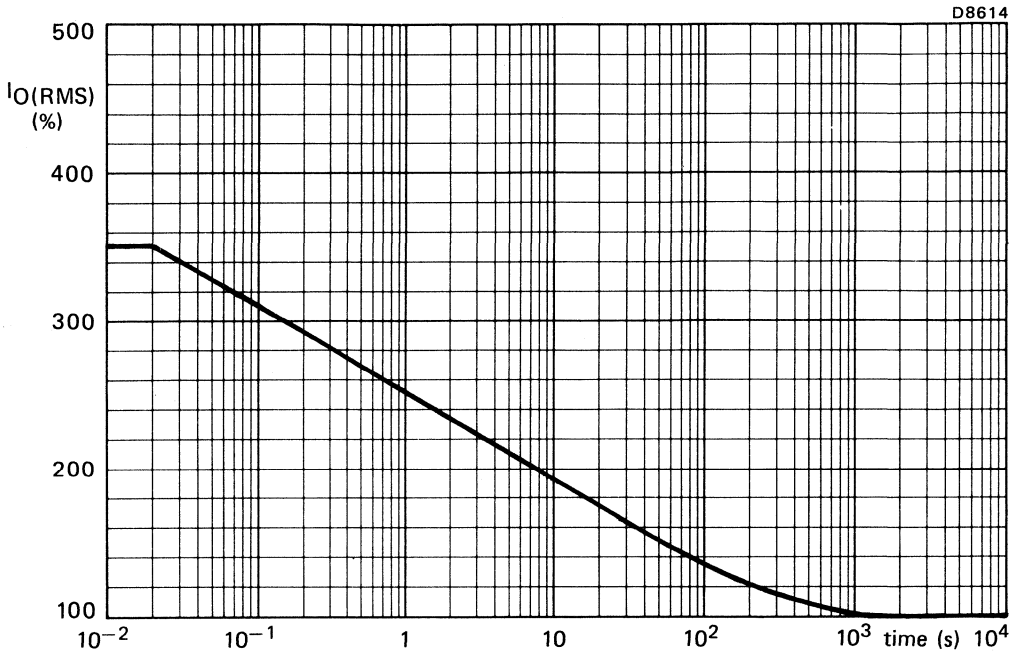

Fig.5 Maximum permissible duration of steady overload (provided that T_h does not exceed 120 °C during and after overload) expressed as a percentage of the steady state r.m.s. rated current. For high r.m.s. overload currents precautions should be taken so that the temperature of the terminals does not exceed 125 °C. During these overload conditions the triac may lose control. Therefore the overload should be terminated by a separate protection device.

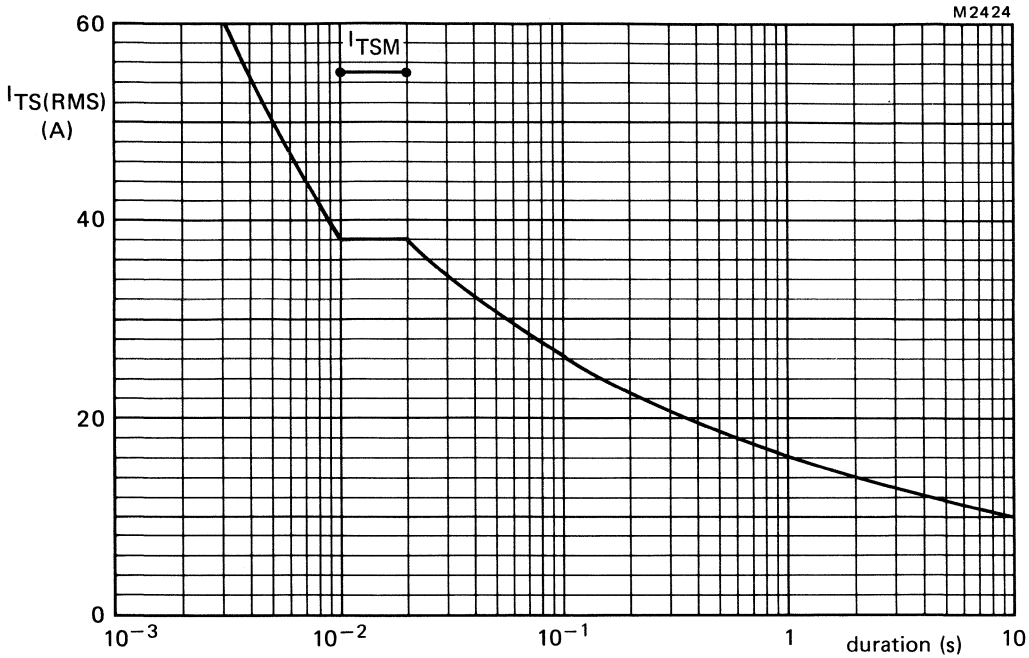

Fig.6 Maximum permissible non-repetitive r.m.s. on-state current based on sinusoidal currents (f = 50 Hz); T_j = 120 °C prior to surge. The triac may temporarily lose control following the surge.

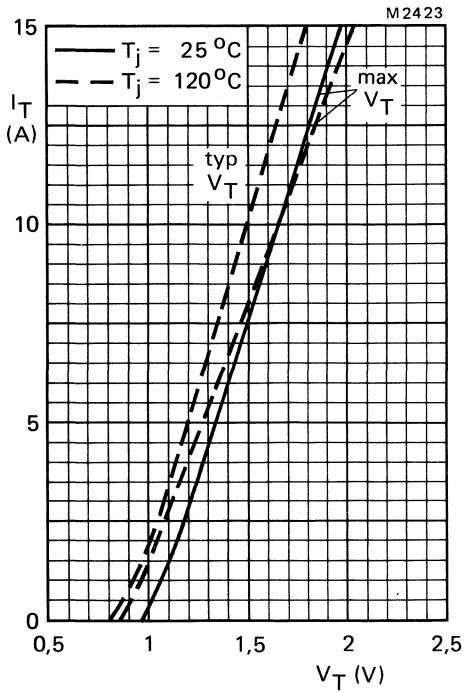

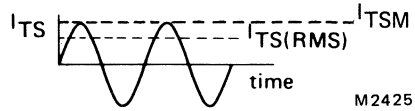

Fig.7 On-state voltage drop (V_T) versus on-state current (I_T) .

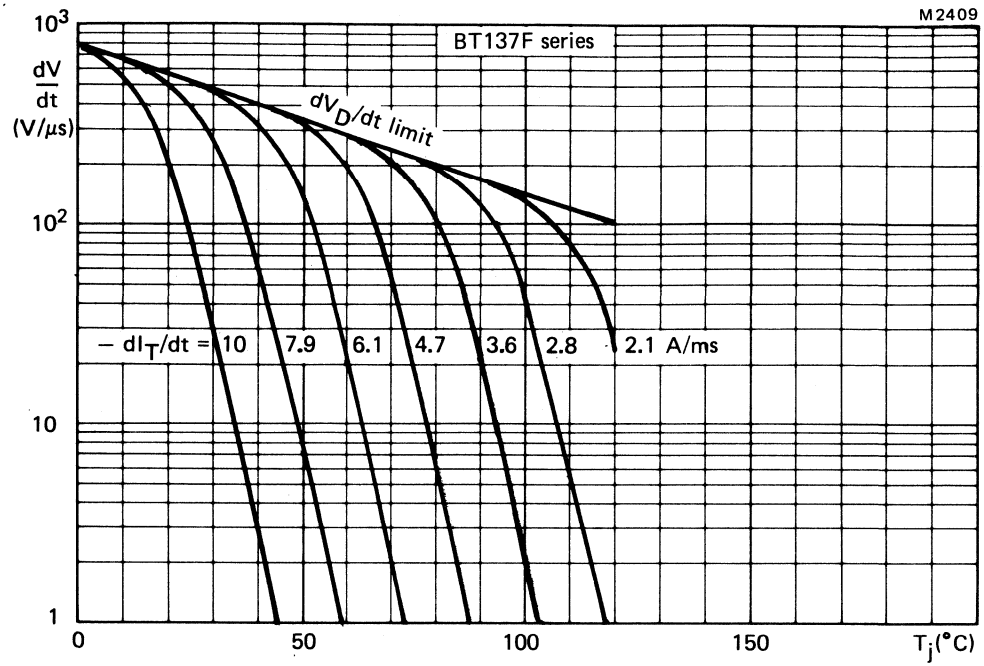

Fig.8 Typical commutation dV/dt for BT137F series versus T_j. The triac should commutate when the dV/dt is below the value on the appropriate curve for pre-commutation dI_T/dt.

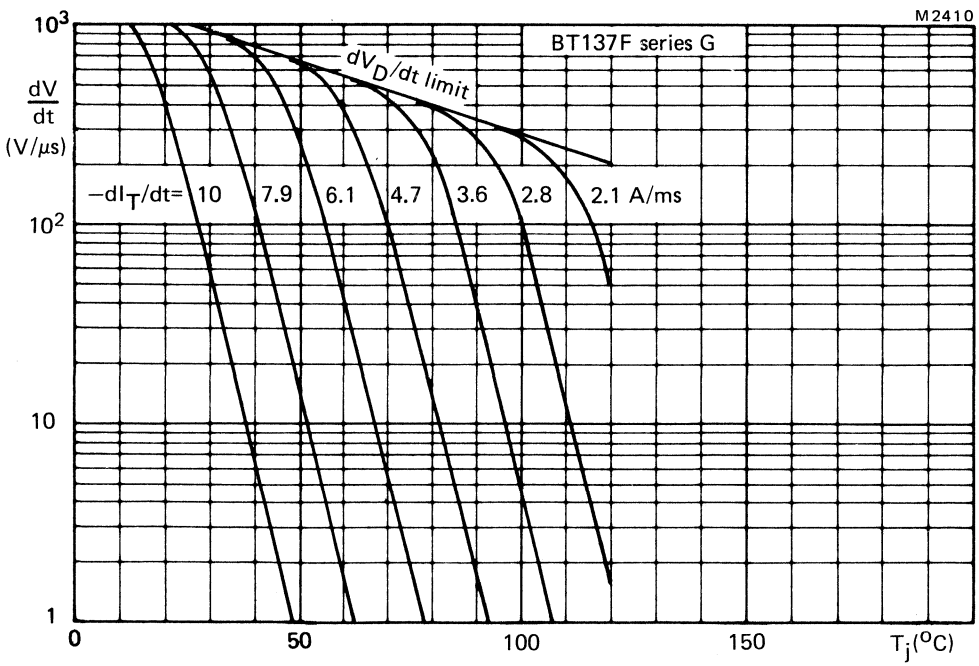

Fig.9 Limit commutation dV/dt for BT137F series G versus T_j. The triac should commutate when the dV/dt is below the value on the appropriate curve for pre-commutation dI_T/dt.

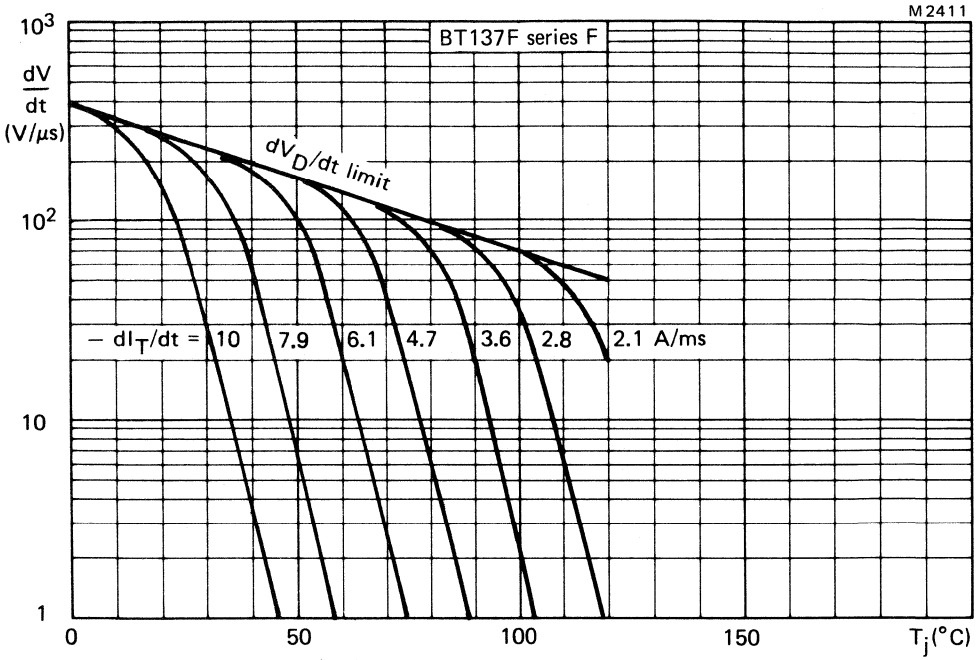

Fig.10 Typical commutation dV/dt for BT137F series F versus T_j. The triac should commutate when the dV/dt is below the value on the appropriate curve for pre-commutation dI_T/dt.

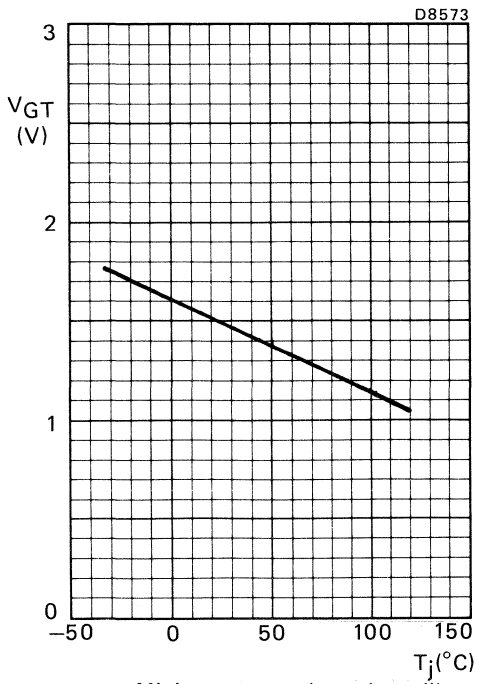

Fig.11 Minimum gate voltage that will trigger all devices; all conditions.

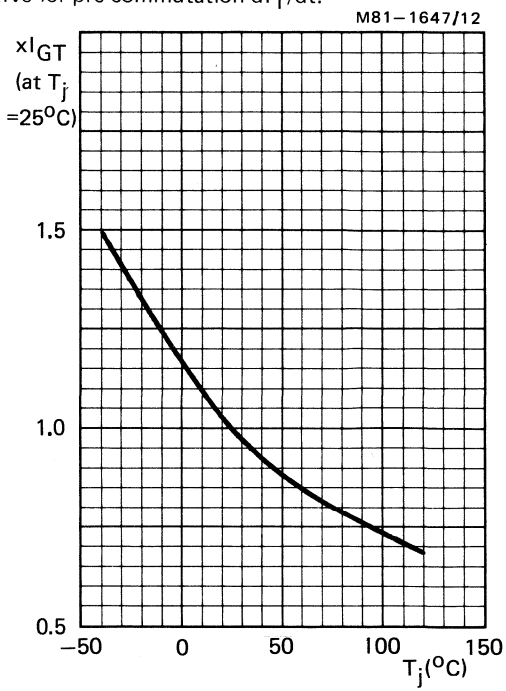

Fig.12 Normalised gate current that will trigger all devices; all conditions.

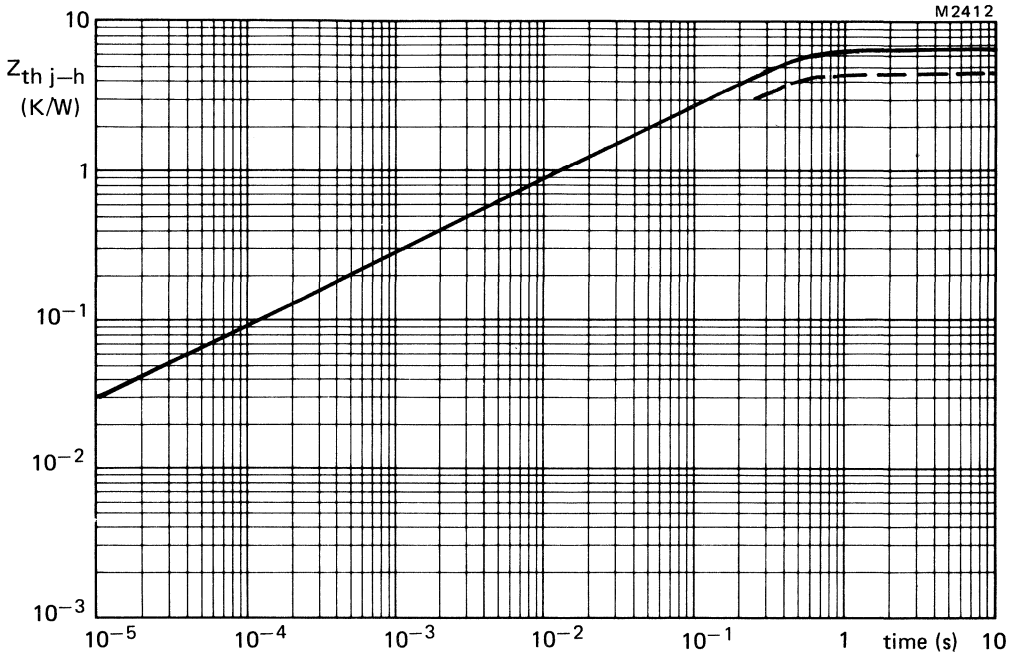

Fig.13 Transient thermal impedance, – – – with heatsink compound; —— without heatsink compound.

TRIACS

Glass-passivated 12 ampere triacs intended for use in applications requiring high bidirectional transient and blocking voltage capability, and high thermal cycling performance with very low thermal resistances, e.g. AC power control applications such as motor, industrial lighting, industrial and domestic heating control and static switching systems.

QUICK REFERENCE DATA

			BT138–500	600	700	800	
Repetitive peak off-state voltage	V_{DRM}	max.	500	600	700	800	V
RMS on-state current	$I_{T(RMS)}$	max.		12			A
Non-repetitive peak on-state current							
at 50 Hz	I_{TSM}	max.		90			A
at 60 Hz	I_{TSM}	max.		100			A

MECHANICAL DATA

Dimensions in mm

Fig.1 TO–220AB

Pinning:

1 = Terminal 1

2 = Terminal 2

3 = Gate

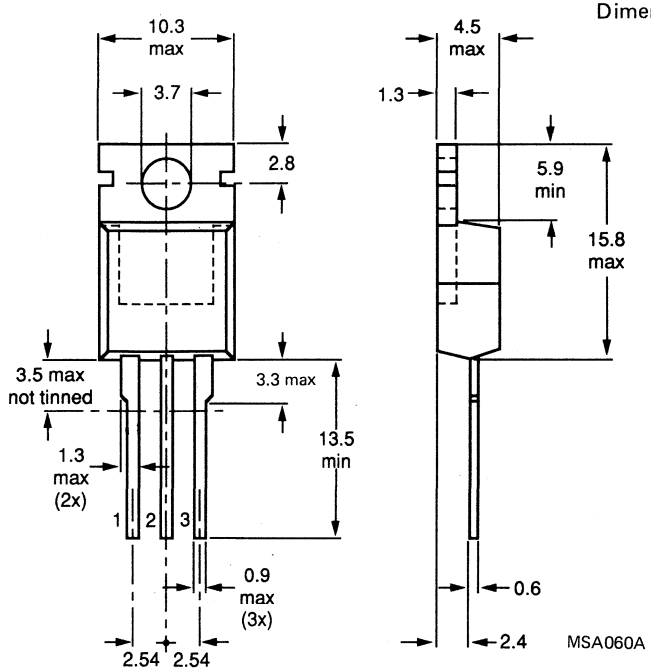

Net mass: 2 g

Note: The exposed metal mounting base is directly connected to terminal T_2.

Accessories supplied on request: see data sheet Mounting instructions and accessories for TO-220 envelopes.

RATINGS

Limiting values in accordance with the Absolute Maximum System (IEC 134).

			BT138–500	600	700	800	
Voltages (in either direction)							
Non-repetitive peak off-state voltage ($t \leqslant 10$ ms)	V_{DSM}	max.	500*	600*	700*	800	V
Repetitive peak off-state voltage ($\delta \leqslant 0.01$)	V_{DRM}	max.	500	600	700	800	V
Crest working off-state voltage	V_{DWM}	max.	400	400	400	400	V
Currents (in either direction)							
RMS on-state current (conduction angle 360°) up to T_{mb} = 95 °C	$I_{T(RMS)}$	max.	12				A
Repetitive peak on-state current	I_{TRM}	max.	90				A
Non-repetitive peak on-state current; T_j = 120 °C prior to surge; full sinewave							
t = 20 ms	I_{TSM}	max.	90				A
t = 16.7 ms	I_{TSM}	max.	100				A
I^2t for fusing (t = 10 ms)	I^2t	max.	40				A^2s
Rate of rise of on-state current after triggering with I_G = 200 mA to I_T = 20 A; dI_G/dt = 0.2 A/μs	dI_T/dt	max.	30				A/μs
Gate to terminal 1							
Power dissipation							
Average power dissipation (averaged over any 20 ms period)	$P_{G(AV)}$	max.	0.5				W
Peak power dissipation	P_{GM}	max.	5.0				W
Temperatures							
Storage temperature	T_{stg}		−40 to +125				°C
Operating junction temperature							
full-cycle operation	T_j	max.	120				°C
half-cycle operation	T_j	max.	110				°C

*Although not recommended, off-state voltages up to 800 V may be applied without damage, but the triac may switch into the on-state. The rate of rise of on-state current should not exceed 15 A/μs.

THERMAL RESISTANCE

From junction to mounting base

full-cycle operation	$R_{th\ j\text{-}mb}$	=	1.5	K/W
half-cycle operation	$R_{th\ j\text{-}mb}$	=	2.0	K/W
Transient thermal impedance; t = 1 ms	$Z_{th\ j\text{-}mb}$	=	0.1	K/W

Influence of mounting method

1. Heatsink mounted with clip (see mounting instructions)

Thermal resistance from mounting base to heatsink

a. with heatsink compound	$R_{th\ mb\text{-}h}$	=	0.3	K/W
b. with heatsink compound and 0.06 mm maximum mica insulator	$R_{th\ mb\text{-}h}$	=	1.4	K/W
c. with heatsink compound and 0.1 mm maximum mica insulator (56369)	$R_{th\ mb\text{-}h}$	=	2.2	K/W
d. with heatsink compound and 0.25 mm maximum alumina insulator (56367)	$R_{th\ mb\text{-}h}$	=	0.8	K/W
e. without heatsink compound	$R_{th\ mb\text{-}h}$	=	1.4	K/W

2. Free-air operation

The quoted values of $R_{th\ j\text{-}a}$ should be used only when no leads of other dissipating components run to the same tie-point.

Thermal resistance from junction to ambient in free air: mounted on a printed-circuit board at a = any lead length	$R_{th\ j\text{-}a}$	=	60	K/W

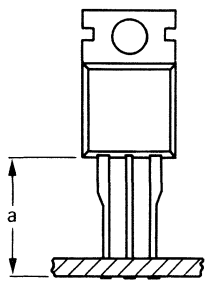

Fig.2

CHARACTERISTICS (T_j = 25 °C unless otherwise stated)

Polarities, positive or negative, are identified with respect to T_1.

Voltages and currents (in either direction)

On-state voltage (measured under pulse conditions to prevent excessive dissipation)

I_T = 15 A	V_T	<	1.65	V

Rate of rise of off-state voltage that will not trigger any device; T_j = 120 °C; gate open circuit

BT138 series	dV_D/dt	<	100	V/µs
BT138 series G	dV_D/dt	<	200	V/µs
BT138 series F	dV_D/dt	<	50	V/µs
BT138 series E	dV_D/dt	typ.	50	V/µs

Rate of change of commutating voltage that will not trigger any device when $-dI_{com}/dt$ = 5.4 A/ms; $I_{T(RMS)}$ = 12 A; T_{mb} = 70 °C; gate open circuit ; $V_D = V_{DWMmax}$

BT138 series	dV_{com}/dt	typ.	10	V/µs
BT138 series G	dV_{com}/dt	<	10	V/µs
BT138 series F	dV_{com}/dt	typ.	10	V/µs

Off-state current

$V_D = V_{DWMmax}$; T_j = 120 °C;	I_D	<	0.5	mA
Gate voltage that will trigger all devices	V_{GT}	>	1.5	V
Gate voltage that will not trigger any device $V_D = V_{DWMmax}$; T_j = 120 °C; T_2 and G positive or negative	V_{GD}	<	250	mV

Gate current that will trigger all devices (I_{GT}); G to T_1
Holding current (I_H)
Latching current (I_L); V_D = 12 V

			T_2+ G+	T_2+ G−	T_2- G−	T_2- G+	
BT138 series	I_{GT}	>	35	35	35	70	mA
	I_H	<	30	30	30	30	mA
	I_L	<	40	60	40	60	mA
BT138 series G	I_{GT}	>	50	50	50	100	mA
	I_H	<	60	60	60	60	mA
	I_L	<	60	90	60	90	mA
BT138 series F	I_{GT}	>	25	25	25	70	mA
	I_H	<	30	30	30	30	mA
	I_L	<	40	60	40	60	mA
BT138 series E	I_{GT}	>	10	10	10	25	mA
	I_H	<	30	30	30	30	mA
	I_L	<	30	40	30	40	mA

MOUNTING INSTRUCTIONS

1. The device may be soldered directly into the circuit, but the maximum permissible temperature of the soldering iron or bath is 275 °C; it must not be in contact with the joint for more than 5 seconds. Soldered joints must be at least 4.7 mm from the seal.
2. The leads should not be bent less than 2.4 mm from the seal, and should be supported during bending. The leads can be bent, twisted or straightened by 90° maximum. The minimum bending radius is 1 mm.
3. It is recommended that the circuit connection be made to tag T_2, rather than direct to the heatsink.
4. Mounting by means of a spring clip is the best mounting method because it offers:
   a. a good thermal contact under the crystal area and slightly lower $R_{th\ mb\text{-}h}$ values than screw mounting.
   b. safe isolation for mains operation.
   However, if a screw is used, it should be M3 cross-recess pan-head. Care should be taken to avoid damage to the plastic body.
5. For good thermal contact, heatsink compound should be used between mounting base and heatsink. Values of $R_{th\ mb\text{-}h}$ given for mounting with heatsink compound refer to the use of a metallic-oxide loaded compound. Ordinary silicone grease is not recommended.
6. Rivet mounting (only possible for non-insulated mounting)

   Devices may be rivetted to flat heatsinks; such a process must neither deform the mounting tab, nor enlarge the mounting hole. The maximum recommended hole size for rivet mounting is 3.5 mm. The pre-formed head of the rivet should be on the device side and any rivet tool used should not damage the plastic body of the device.
7. The heatsink must have a flatness in the mounting area of 0.02 mm maximum per 10 mm. Mounting holes must be deburred.

OPERATING NOTES

Dissipation and heatsink considerations:

a. The various components of junction temperature rise above ambient are illustrated in Fig.3.

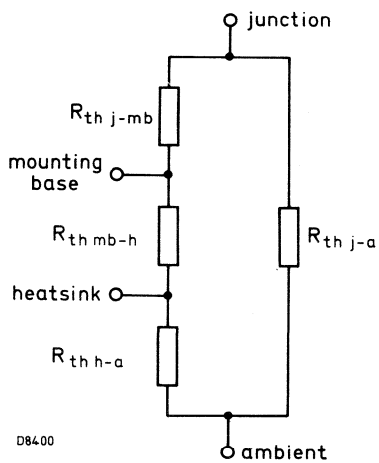

Fig.3.

b. The method of using Fig.4 is as follows:
Starting with the required current on the $I_{T(RMS)}$ axis, trace upwards to meet the appropriate conduction angle curve. Trace right horizontally and upwards from the appropriate value on the T_{amb} scale. The intersection determines the $R_{th\ mb\text{-}a}$. The heatsink thermal resistance value ($R_{th\ h\text{-}a}$) can now be calculated from:

$$R_{th\ h\text{-}a} = R_{th\ mb\text{-}a} - R_{th\ mb\text{-}h}.$$

c. Any measurement of heatsink temperature should be made immediately adjacent to the device.

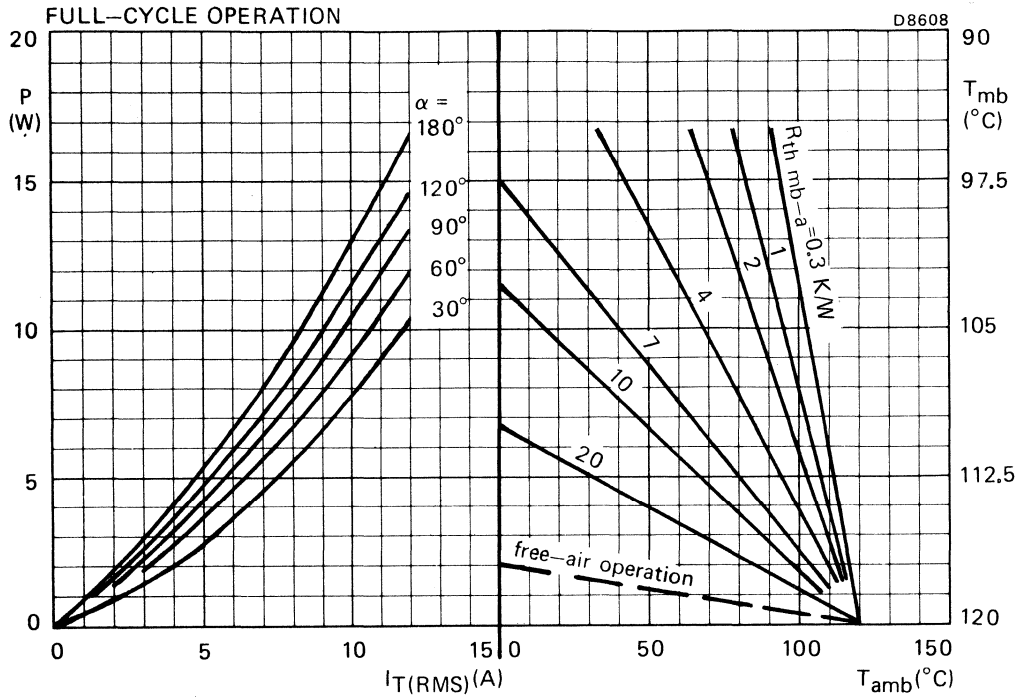

Fig.4 The right-hand part shows the interrelationship between the power (derived from the left-hand part) and the maximum permissible temperatures.

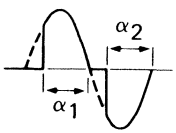

$\alpha = \alpha_1 = \alpha_2$: conduction angle per half cycle

OVERLOAD OPERATION

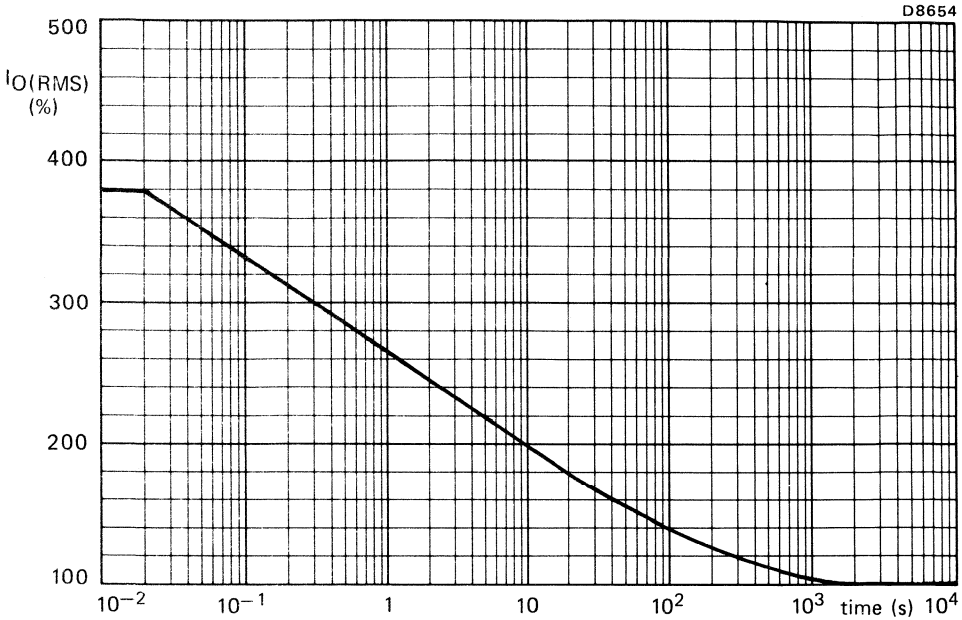

Fig.5 Maximum permissible duration of steady overload (provided that T_{mb} does exceed 120 °C during and after overload) expressed as a percentage of the steady state r.m.s. rated current. For high r.m.s. overload currents precautions should be taken so that the temperature of the terminals does not exceed 125 °C. During these overload conditions the triac may lose control. Therefore the overload should be terminated by a separate protection device.

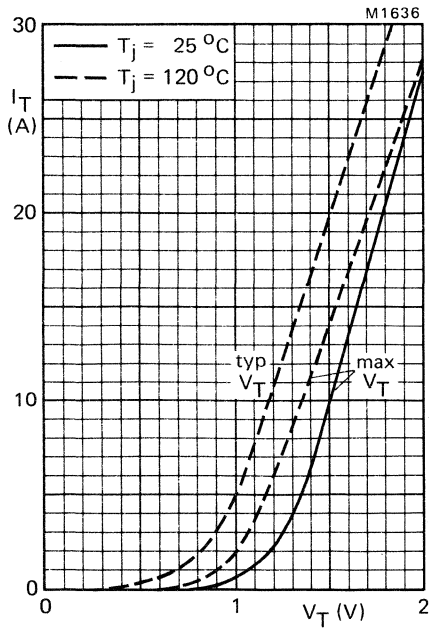

Fig.6

LIMITS FOR STARTING OR INRUSH CURRENTS – FULL-CYCLE OPERATION

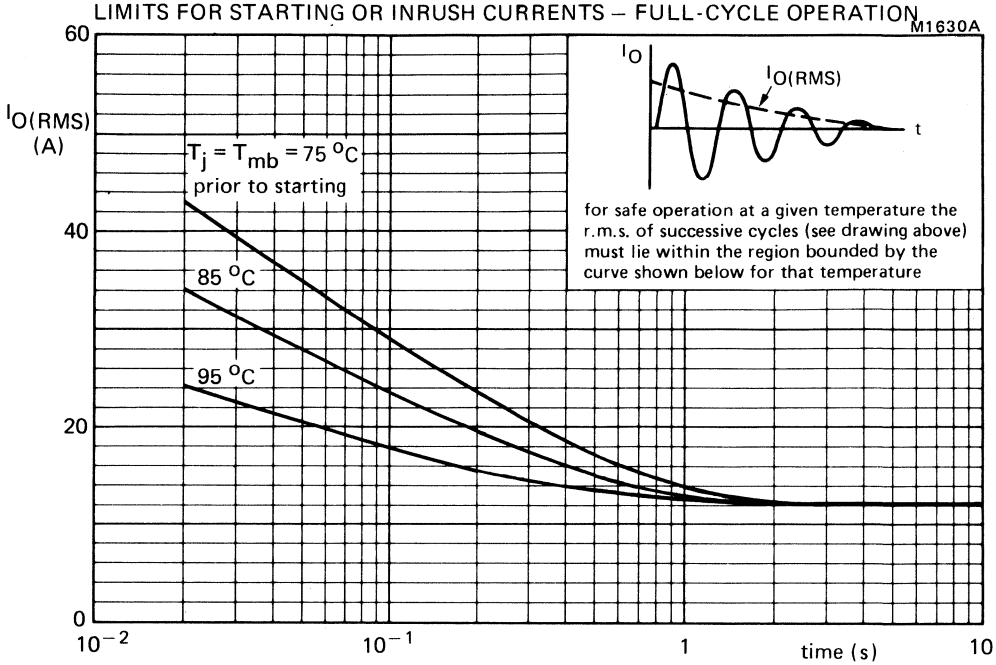

Fig. 7

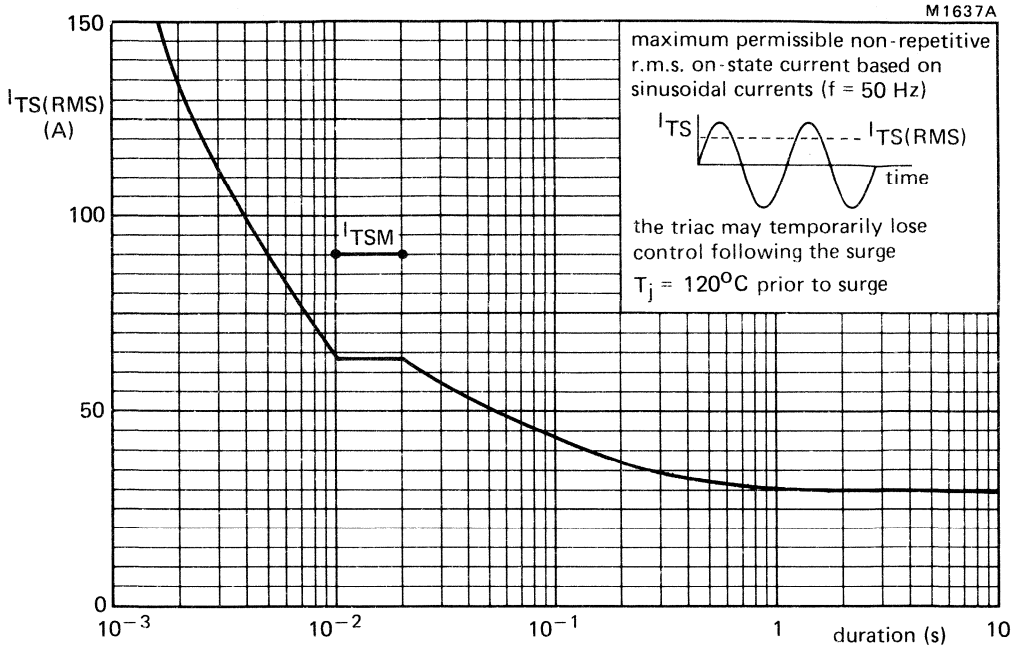
M1637A
150
100
50
0
$I_{TS(RMS)}$ (A)
I_{TSM}
maximum permissible non-repetitive r.m.s. on-state current based on sinusoidal currents (f = 50 Hz)
I_{TS}
$I_{TS(RMS)}$
time
the triac may temporarily lose control following the surge
T_j = 120°C prior to surge
10^{-3}
10^{-2}
10^{-1}
1
duration (s)
10

Fig.8

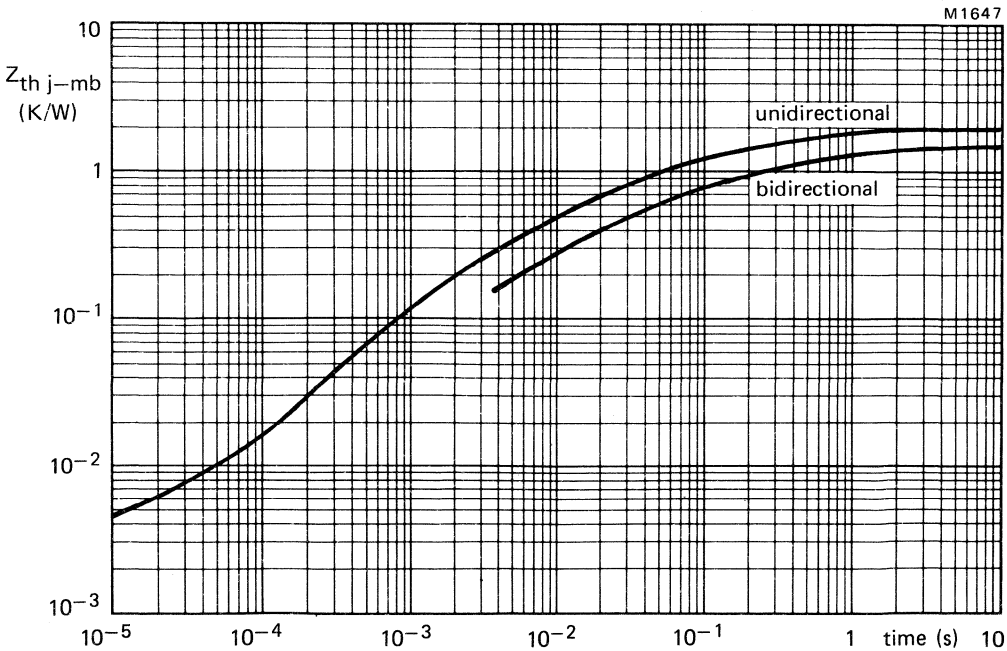
M1647
10
1
10^{-1}
10^{-2}
10^{-3}
$Z_{th\ j-mb}$ (K/W)
unidirectional
bidirectional
10^{-5}
10^{-4}
10^{-3}
10^{-2}
10^{-1}
1
time (s)
10

Fig.9

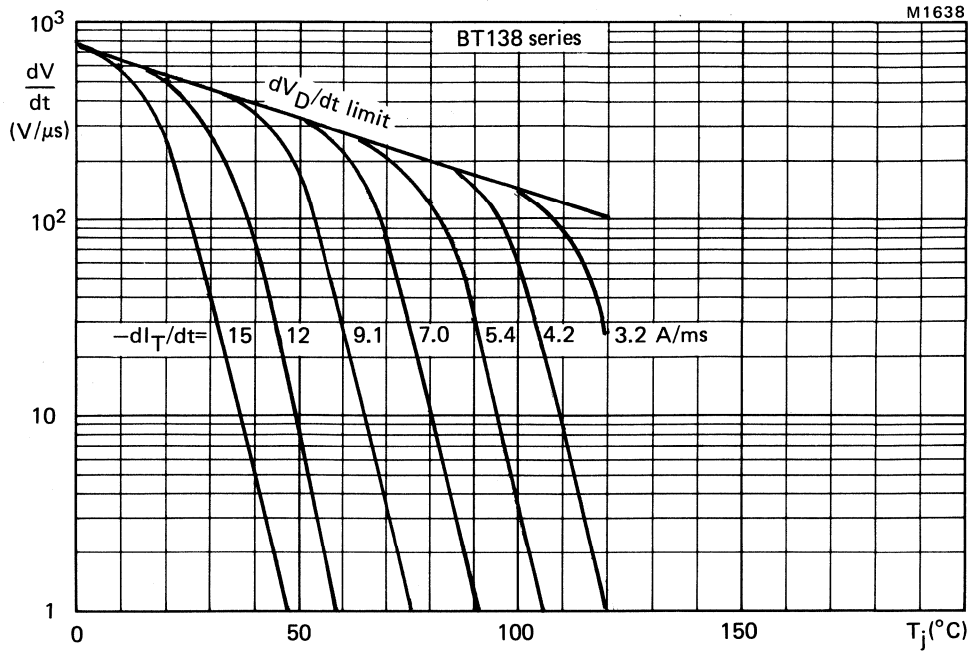

Fig.10 Typical commutation dV/dt for BT138 series versus T_j. The triac should commutate when dV/dt is below the value on the appropriate curve for pre-commutation dI_T/dt.

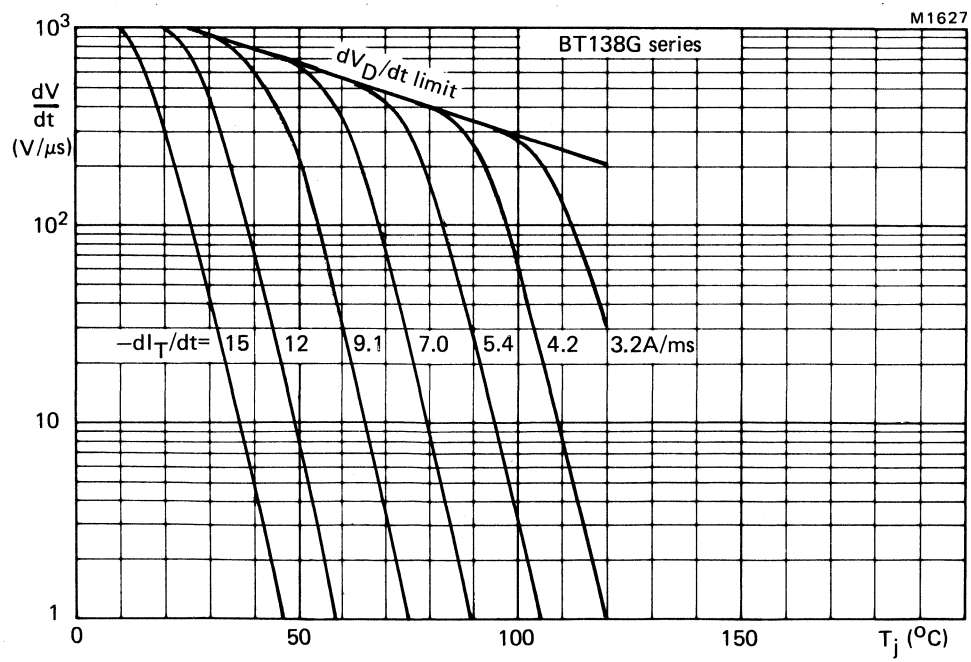

Fig.11 Limit commutation dV/dt for BT138G series versus T_j. The triac should commutate when the dV/dt is below the value on the appropriate curve for pre-commutation dI_T/dt.

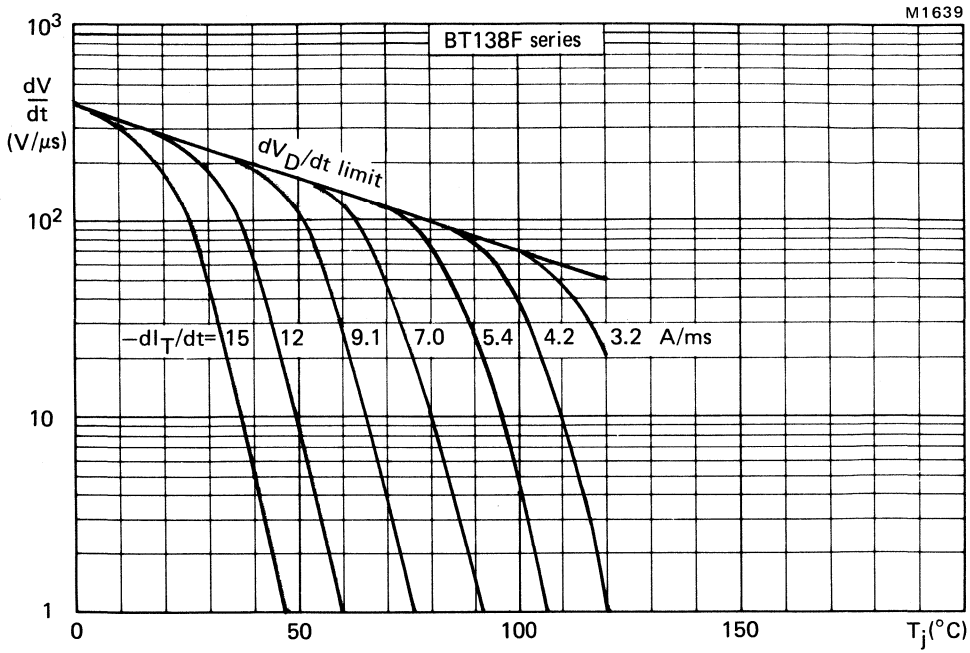

Fig.12 Typical commutation dV/dt for BT138F series versus T_j. The triac should commutate when the dV/dt is below the value on the appropriate curve for pre-commutation dI_T/dt.

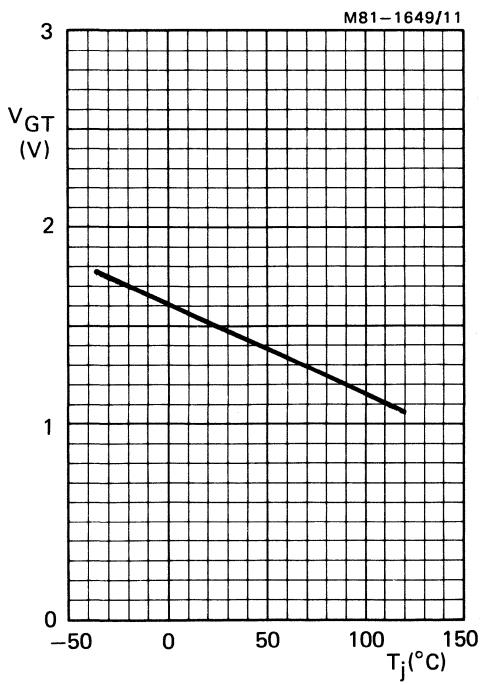

Fig.13 Minimum gate voltage that will trigger all devices; all conditions.

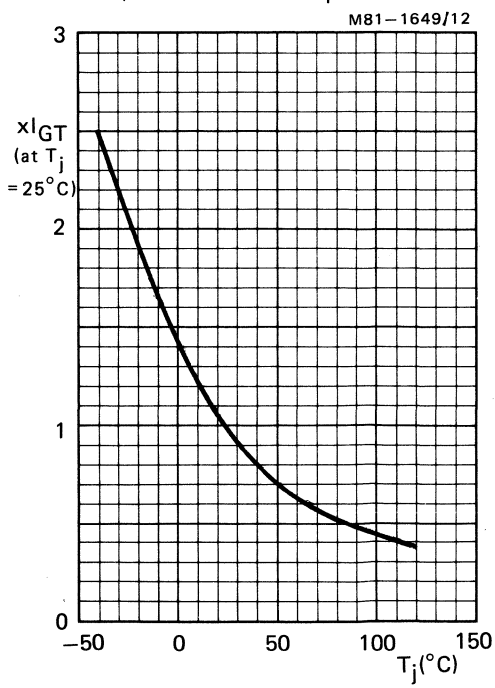

Fig.14 Normalised gate current that will trigger all devices; all conditions.

FULL-PACK TRIACS

Glass-passivated 12 ampere triacs in SOT-186 envelopes, which feature an electrically isolated mounting base. They are intended for use in applications requiring high bidirectional transient and blocking voltage capability. Typical applications include AC power control circuits such as lighting, industrial and domestic heating, motor control and switching systems.

QUICK REFERENCE DATA

			BT138F–500	600	700	800	
Repetitive peak off-state voltage	V_{DRM}	max.	500	600	700	800	V
RMS on-state current	$I_{T(RMS)}$	max.		12			A
Non-repetitive peak on-state current							
at 50 Hz	I_{TSM}	max.		90			A
at 60 Hz	I_{TSM}	max.		100			A

MECHANICAL DATA

Dimensions in mm

Fig.1 SOT-186

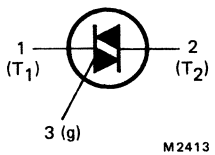

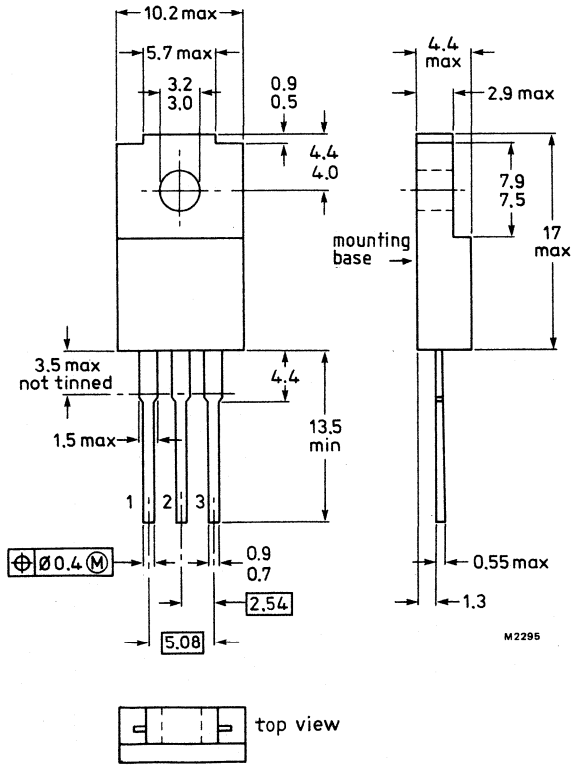

Net mass: 2 g.

The mounting base is electrically isolated from all terminals.

Accessories supplied on request (see data sheets Mounting instructions for F-pack devices and Accessories for SOT-186 envelopes).

RATINGS

Limiting values in accordance with the Absolute Maximum System (IEC 134).

Voltages (in either direction)			BT138F–500	600	700	800	
Non-repetitive peak off-state voltage ($t \leqslant 10$ ms)	V_{DSM}	max.	500*	600*	700*	800	V
Repetitive peak off-state voltage ($\delta \leqslant 0.01$)	V_{DRM}	max.	500	600	700	800	V
Crest working off-state voltage	V_{DWM}	max.	400	400	400	400	V

Currents (in either direction)				
RMS on-state current (conduction angle 360°) up to T_h = 52 °C	$I_{T(RMS)}$	max.	12	A
Repetitive peak on-state current	I_{TRM}	max.	90	A
Non-repetitive peak on-state current; T_j = 120 °C prior to surge; full sinewave				
t = 20 ms	I_{TSM}	max.	90	A
t = 16.7 ms	I_{TSM}	max.	100	A
I^2t for fusing (t = 10 ms)	I^2t	max.	40	A^2s
Rate of rise of on-state current after triggering with I_G = 200 mA to I_T = 20 A; dI_G/dt = 0.2 A/μs	dI_T/dt	max.	30	A/μs

Gate to terminal 1

Power dissipation				
Average power dissipation (averaged over any 20 ms period)	$P_{G(AV)}$	max.	0.5	W
Peak power dissipation	P_{GM}	max.	5.0	W

Temperatures				
Storage temperature	T_{stg}		−40 to +125	°C
Operating junction temperature				
full-cycle operation	T_j	max.	120	°C
half-cycle operation	T_j	max.	110	°C

ISOLATION

From all three terminals to external heatsink (peak)**	$V_{(isol)M}$	min.	1500	V
Capacitance from T_2 to external heatsink	$C_{(isol)}$	typ.	12	pF

*Although not recommended, off-state voltages up to 800 V may be applied without damage, but the triac may switch into the on-state. The rate of rise of on-state current should not exceed 15 A/μs.

**Measured with relative humidity <65% under clean and dust-free conditions.

THERMAL RESISTANCE

1. Heatsink mounted with clip (see mounting instructions)

Thermal resistance from junction to external heatsink

With heatsink compound	$R_{th\ j\text{-}h}$	=	4.0	K/W
Without heatsink compound	$R_{th\ j\text{-}h}$	=	5.5	K/W

2. Free-air operation

The quoted values of $R_{th\ j\text{-}a}$ should be used only when no leads of other dissipating components run to the same tie-point.

Thermal resistance from junction to ambient in free air: mounted on a printed-circuit board at a = any lead length	$R_{th\ j\text{-}a}$	=	55	K/W

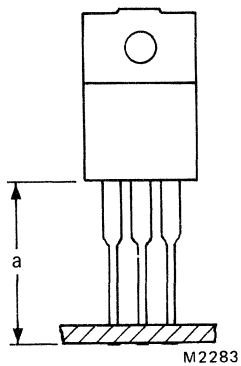

Fig.2.

CHARACTERISTICS (T_j = 25 °C unless otherwise stated)

Polarities, positive or negative, are identified with respect to T_1.

Voltage and currents (in either direction)

On-state voltage (measured under pulse conditions to prevent excessive dissipation)				
I_T = 15 A	V_T	<	1.65	V
Rate of rise of off-state voltage that will not trigger any device; T_j = 120 °C; gate open circuit				
BT138F series	dV_D/dt	<	100	V/µs
BT138F series G	dV_D/dt	<	200	V/µs
BT138F series F	dV_D/dt	<	50	V/µs
BT138F series E	dV_D/dt	typ.	50	V/µs
Rate of change of commutating voltage that will not trigger any device when $-dI_{com}/dt$ = 5.4 A/ms; $I_{T(RMS)}$ = 12 A; T_h = 40 °C; gate open circuit; $V_D = V_{DWMmax}$				
BT138F series	dV_{com}/dt	typ.	10	V/µs
BT138F series G	dV_{com}/dt	<	10	V/µs
BT138F series F	dV_{com}/dt	typ.	10	V/µs
Off-state current				
$V_D = V_{DWMmax}$; T_j = 120 °C;	I_D	<	0.5	mA
Gate voltage that will trigger all devices	V_{GT}	>	1.5	V
Gate voltage that will not trigger any device $V_D = V_{DWMmax}$; T_j = 120 °C; T_2 and G positive or negative	V_{GD}	<	250	mV

Gate current that will trigger all devices (I_{GT}); G to T_1

Holding current (I_H) Latching current (I_L); V_D = 12 V			T_2+ G+	T_2+ G−	T_2− G−	T_2− G+	
BT138F series	I_{GT}	>	35	35	35	70	mA
	I_H	<	30	30	30	30	mA
	I_L	<	40	60	40	60	mA
BT138F series G	I_{GT}	>	50	50	50	100	mA
	I_H	<	60	60	60	60	mA
	I_L	<	60	90	60	90	mA
BT138F series F	I_{GT}	>	25	25	25	70	mA
	I_H	<	30	30	30	30	mA
	I_L	<	40	60	40	60	mA
BT138F series E	I_{GT}	>	10	10	10	25	mA
	I_H	<	30	30	30	30	mA
	I_L	<	30	40	30	40	mA

MOUNTING INSTRUCTIONS

1. The triac may be soldered directly into the circuit, but the maximum permissible temperature of the soldering iron or bath is 275 °C; it must not be in contact with the joint for more than 5 seconds. Soldered joints must be at least 4.7 mm from the seal.
2. The leads should not be bent less than 2.4 mm from the seal, and should be supported during bending. The leads can be bent, twisted or straightened by 90° maximum. The minimum bending radius is 1 mm.
3. Mounting by means of a spring clip is the best mounting method because it offers good thermal contact under the crystal area and slightly lower $R_{th\ j\text{-}h}$ values than screw mounting. However, if a screw is used, it should be M3 cross-recess pan-head. Care should be taken to avoid damage to the plastic body.
4. For good thermal contact heatsink compound should be used between mounting base and heatsink. Values of $R_{th\ j\text{-}h}$ given for mounting with heatsink compound refer to the use of a metallic-oxide loaded compound. Ordinary silicone grease is not recommended.
5. Rivet mounting is not recommended.
6. The heatsink must have a flatness in the mounting area of 0.02 mm maximum per 10 mm. Mounting holes must be deburred.

OPERATING NOTES

Dissipation and heatsink considerations:

a. The various components of junction temperature rise above ambient are illustrated in Fig.3.

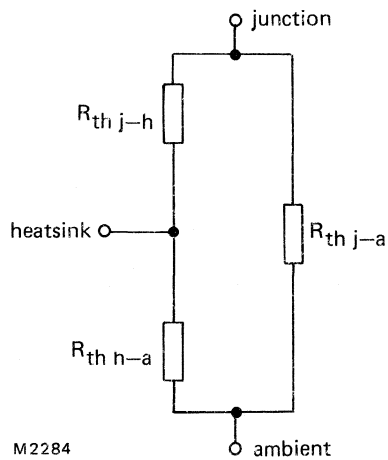

Fig.3.

b. The method of using Figs.4 and 5 is as follows:
Starting with the required current on the $I_{T(RMS)}$ axis (l.h. graph) trace upwards to meet the appropriate conduction angle curve. Trace left from curve to obtain power P. Trace right from curve to obtain T_h (r.h. graph). Trace upwards from T_{amb}, intersect with T_h determines $R_{th\ h\text{-}a}$, required heatsink thermal resistance.

c. Any measurement of heatsink temperature should be made immediately adjacent to the device.

FULL-WAVE CONDUCTION (with heatsink compound)

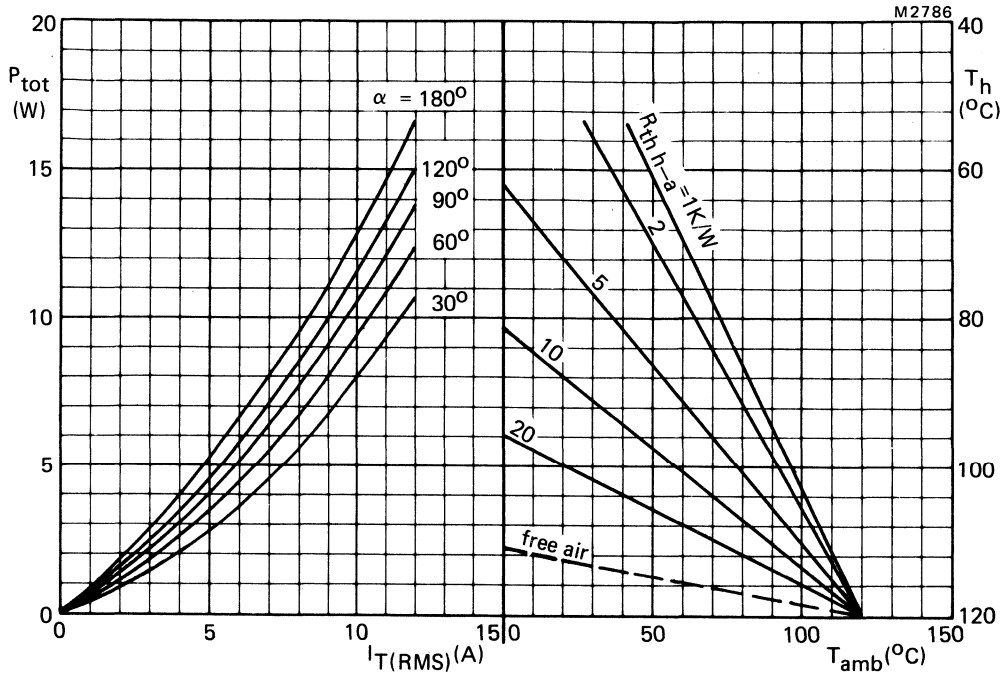

Fig.4 The right-hand part shows the interrelationship between the power (derived from the left-hand part) and the maximum permissible temperatures.

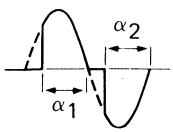

$\alpha = \alpha_1 = \alpha_2$: conduction angle per half cycle

FULL-WAVE CONDUCTION (without heatsink compound)

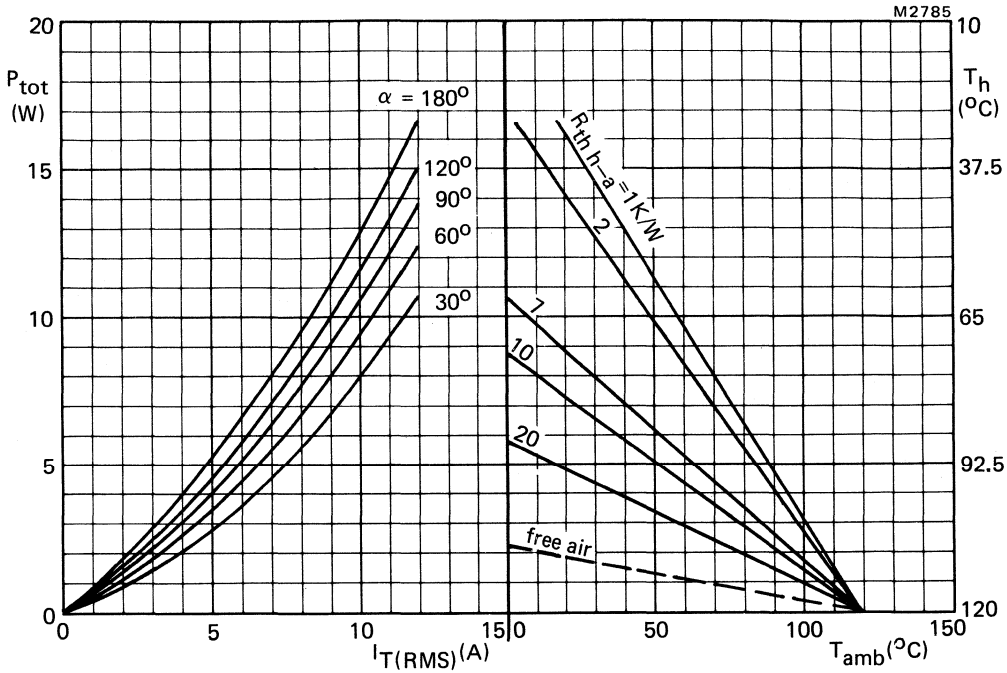

Fig.5 The right-hand part shows the interrelationship between the power (derived from the left-hand part) and the maximum permissible temperatures.

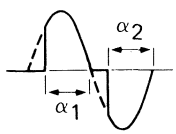

$\alpha = \alpha_1 = \alpha_2$: conduction angle per half cycle

OVERLOAD OPERATION

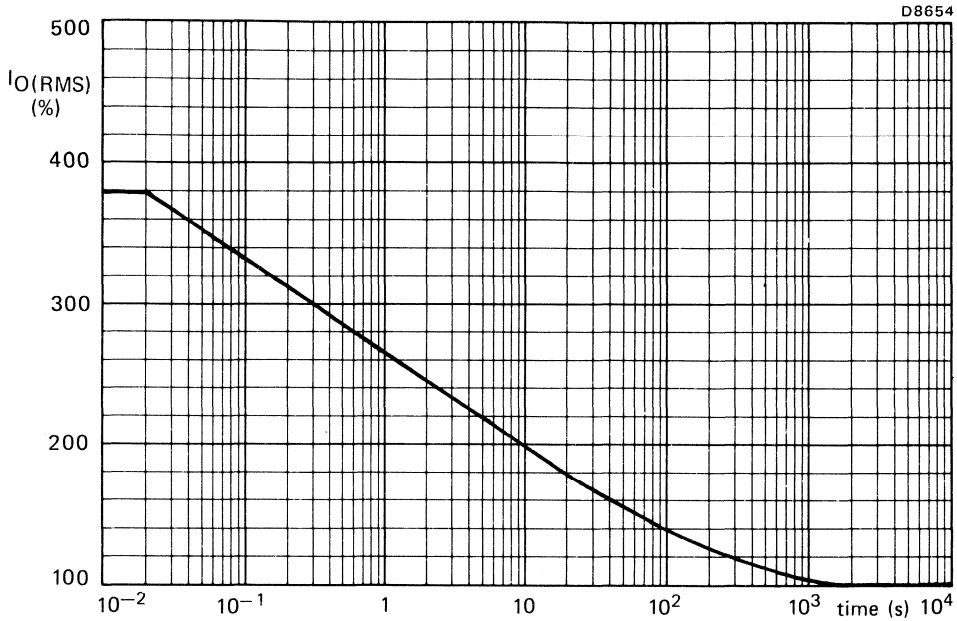

Fig.6 Maximum permissible duration of steady overload (provided that T_h does not exceed 120 °C during and after overload) expressed as a percentage of the steady state r.m.s. rated current. For high r.m.s. overload currents precautions should be taken so that the temperature of the terminals does not exceed 125 °C. During these overload conditions the triac may lose control. Therefore the overload should be terminated by a separate protection device.

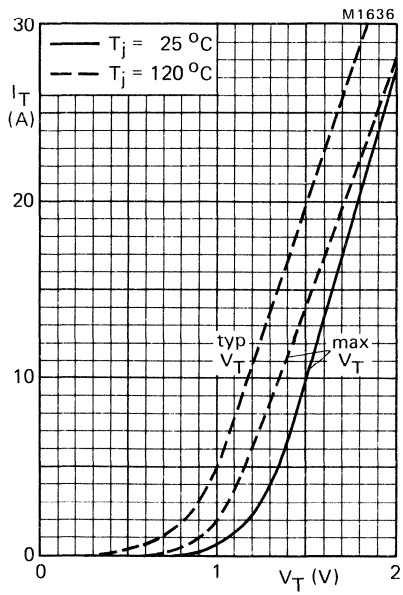

Fig.7.

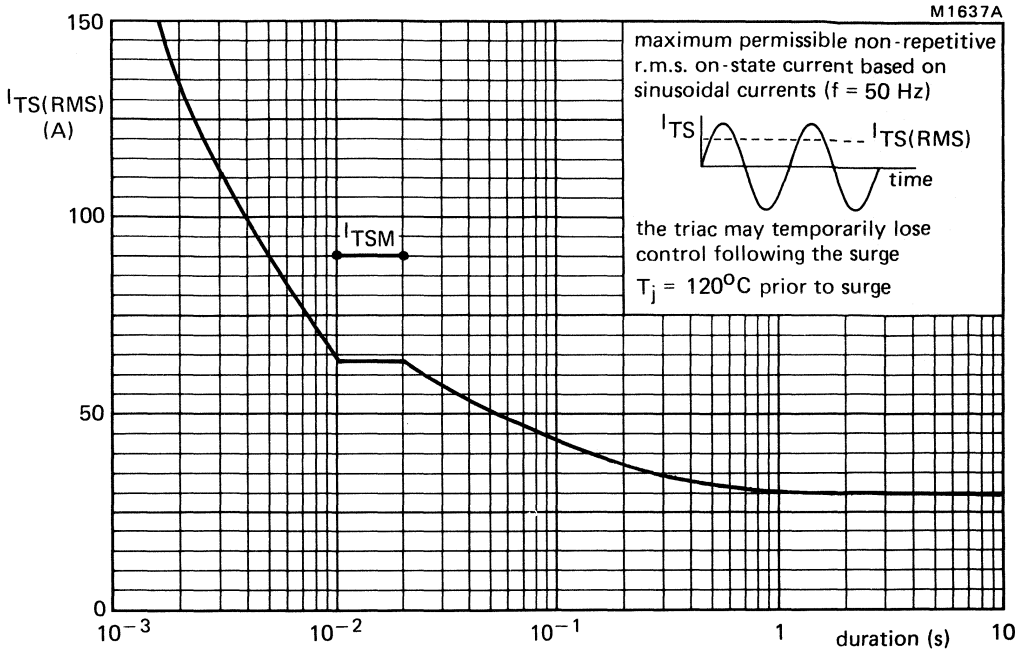

Fig.8.

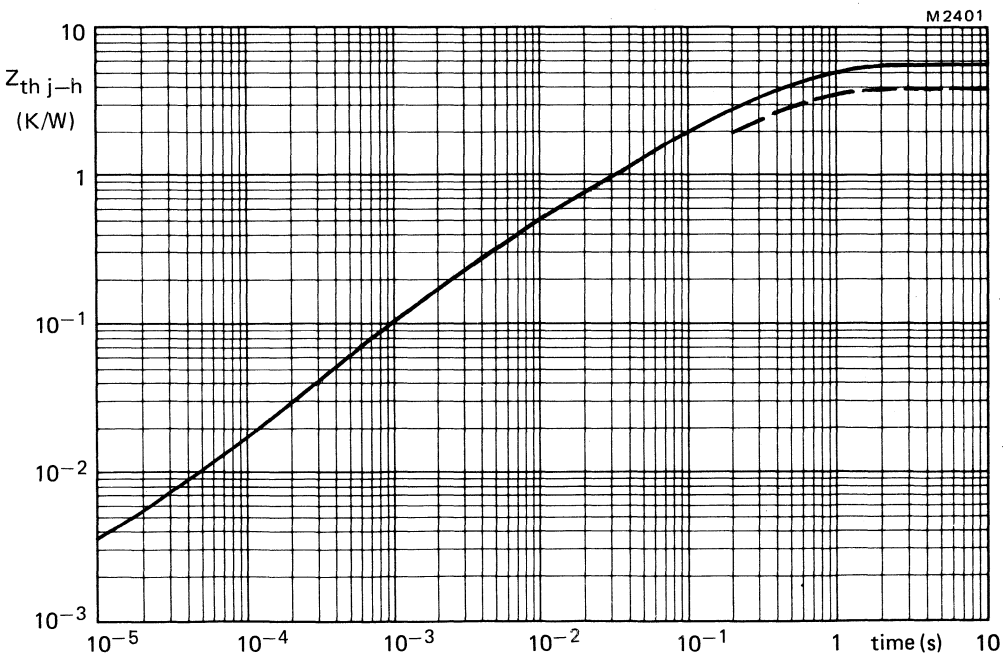

Fig.9 Transient thermal impedance; — — — with heatsink compound; —— without heatsink compound.

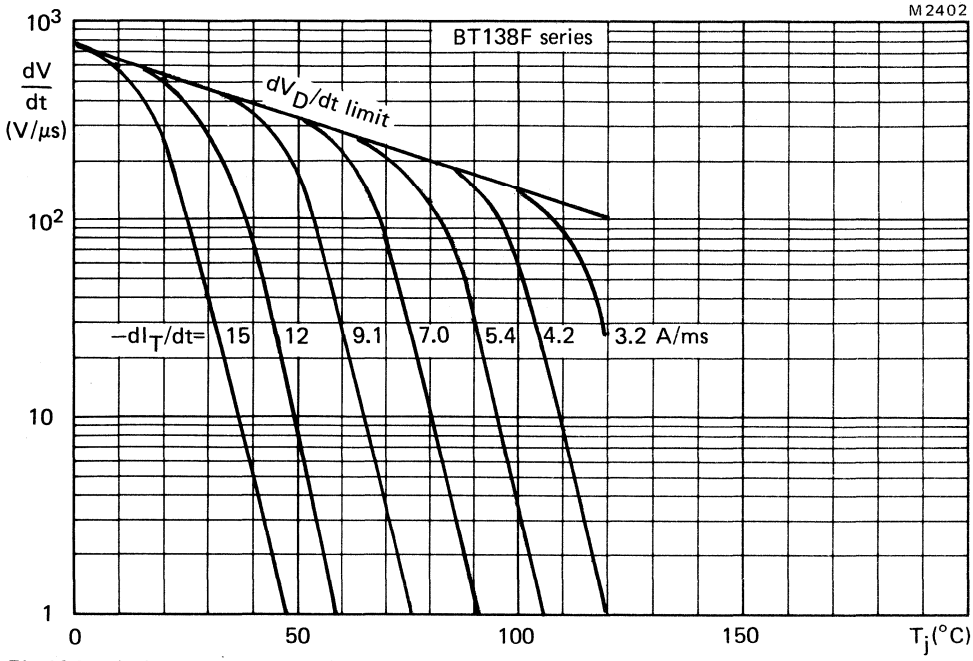

Fig.10 Typical commutation dV/dt for BT138F series versus T_j. The triac should commutate when dV/dt is below the value on the appropriate curve for pre-commutation dI_T/dt.

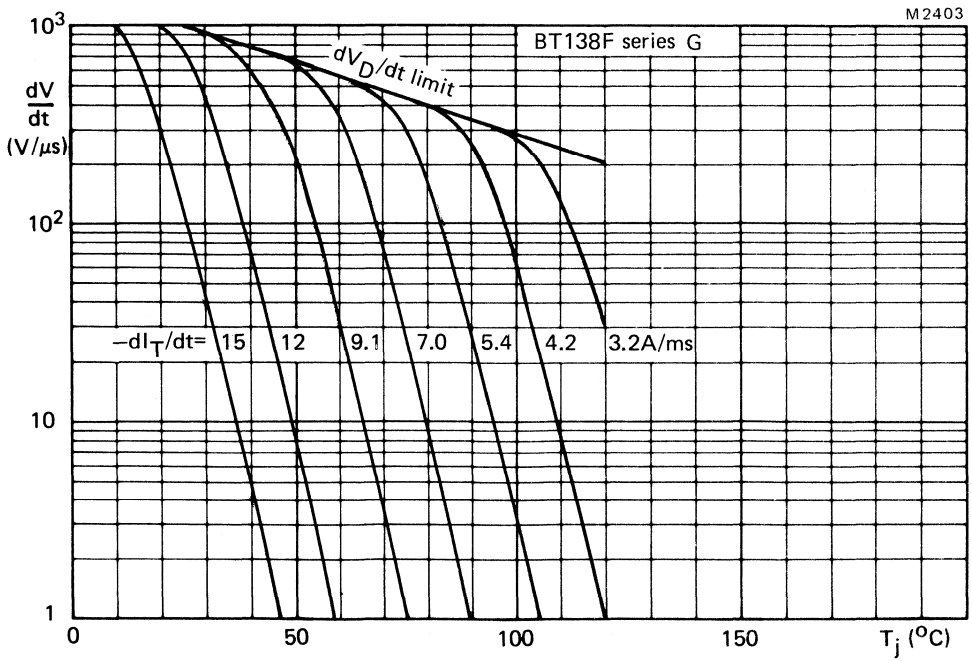

Fig.11 Limit commutation dV/dt for BT138F series G versus T_j. The triac should commutate when the dV/dt is below the value on the appropriate curve for pre-commutation dI_T/dt.

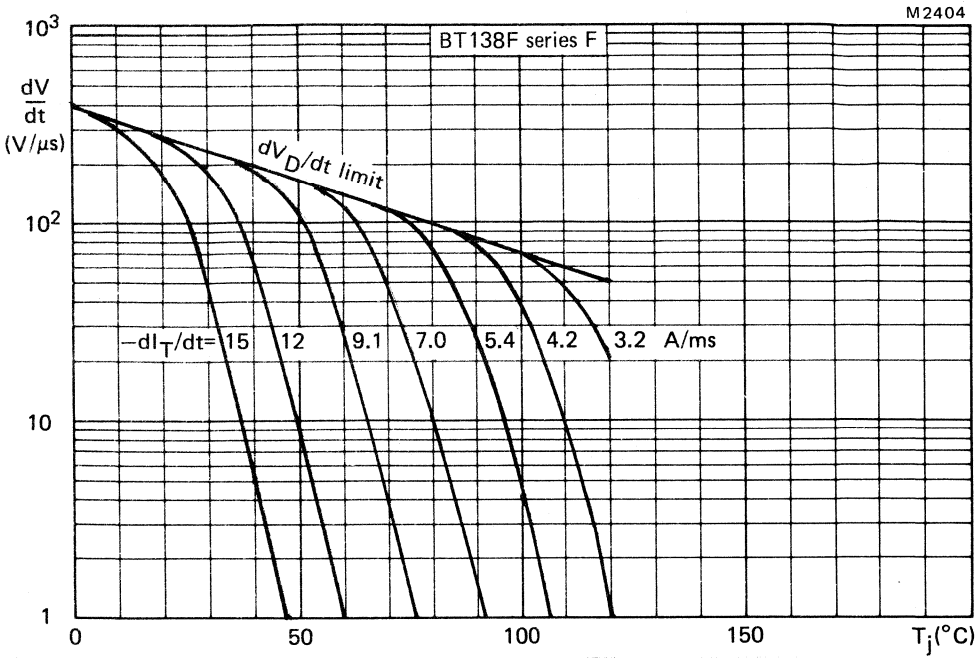

Fig.12 Typical commutation dV/dt for BT138F series F versus T_j. The triac should commutate when the dV/dt is below the value on the appropriate curve for pre-commutation dI_T/dt.

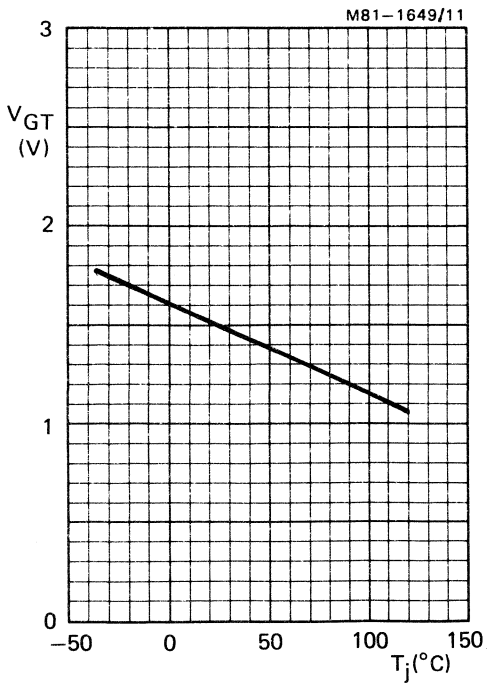

Fig.13 Minimum gate voltage that will trigger all devices; all conditions.

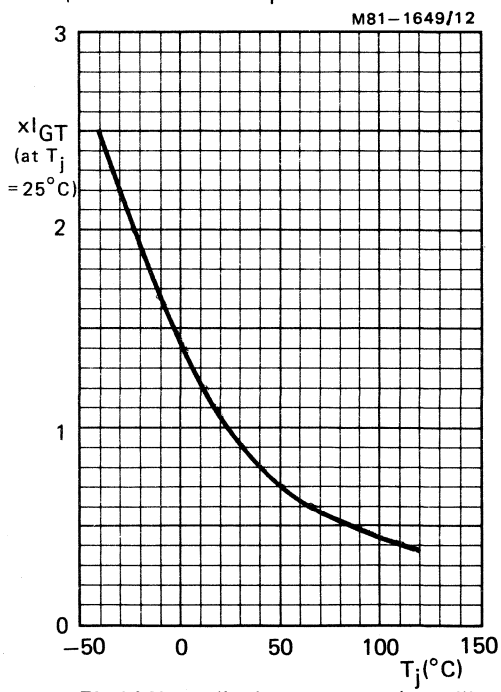

Fig.14 Normalised gate current that will trigger all devices; all conditions.

LIMITS FOR STARTING OR INRUSH CURRENTS – FULL-CYCLE OPERATION

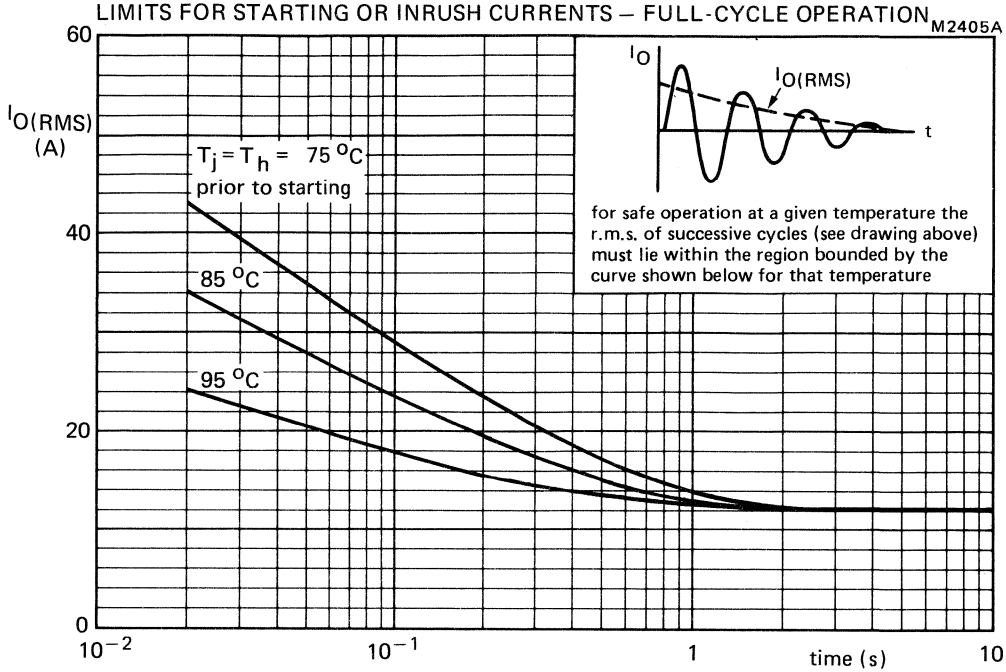

Fig.15

TRIACS

Glass-passivated 16 ampere triacs intended for use in applications requiring high bidirectional transient and blocking voltage capability, and high thermal cycling performance with very low thermal resistances, e.g. AC power control applications such as motor, industrial lighting, industrial and domestic heating control and static switching systems.

QUICK REFERENCE DATA

			BT139–500	600	700	800	
Repetitive peak off-state voltage	V_{DRM}	max.	500	600	700	800	V
RMS on-state current	$I_{T(RMS)}$	max.		16			A
Non-repetitive peak on-state current							
at 50 Hz	I_{TSM}	max.		140			A
at 60 Hz	I_{TSM}	max.		150			A

MECHANICAL DATA

Dimensions in mm

Fig.1 TO–220AB

Pinning:

1 = Terminal 1

2 = Terminal 2

3 = Gate

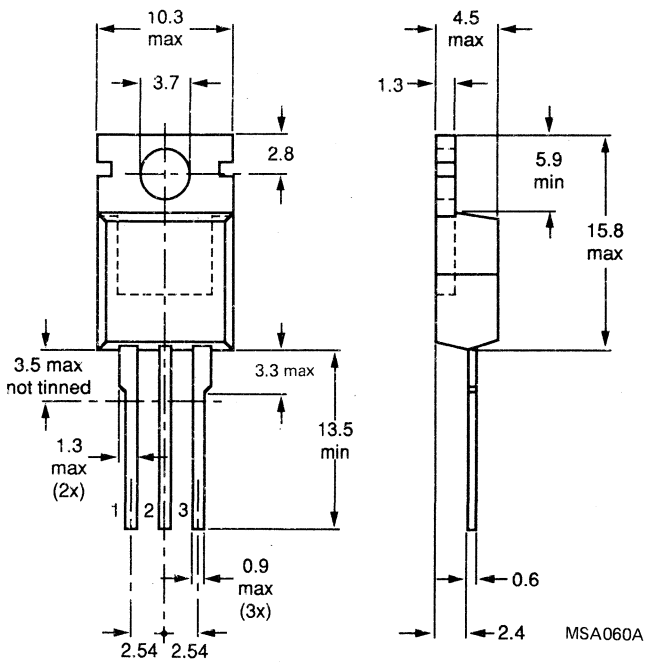

Net mass: 2 g

Note: The exposed metal mounting base is directly connected to terminal T_2.

Accessories supplied on request: see data sheet Mounting instructions and accessories for TO-220 envelopes.

RATINGS

Limiting values in accordance with the Absolute Maximum System (IEC 134).

Voltages (in either direction)			BT139–500	600	700	800	
Non-repetitive peak off-state voltage ($t \leqslant 10$ ms)	V_{DSM}	max.	500*	600*	700*	800	V
Repetitive peak off-state voltage ($\delta \leqslant 0.01$)	V_{DRM}	max.	500	600	700	800	V
Crest working off-state voltage	V_{DWM}	max.	400	400	400	400	V

Currents (in either direction)				
RMS on-state current (conduction angle 360°) up to T_{mb} = 93 °C	$I_{T(RMS)}$	max.	16	A
Repetitive peak on-state current	I_{TRM}	max.	140	A
Non-repetitive peak on-state current; T_j = 120 °C prior to surge; full sinewave				
t = 20 ms	I_{TSM}	max.	140	A
t = 16.7 ms	I_{TSM}	max.	150	A
I^2t for fusing (t = 10 ms)	I^2t	max.	95	A^2s
Rate of rise of on-state current after triggering with I_G = 200 mA to I_T = 20 A; dI_G/dt = 0.2 A/μs	dI_T/dt	max.	30	A/μs
Gate to terminal 1				
Power dissipation				
Average power dissipation (averaged over any 20 ms period)	$P_{G(AV)}$	max.	0.5	W
Peak power dissipation	P_{GM}	max.	5	W
Temperatures				
Storage temperature	T_{stg}		−40 to +125	°C
Operating junction temperature				
full-cycle operation	T_j	max.	120	°C
half-cycle operation	T_j	max.	110	°C

*Although not recommended, off-state voltages up to 800 V may be applied without damage, but the triac may switch into the on-state. The rate of rise of on-state current should not exceed 15 A/μs.

THERMAL RESISTANCE

From junction to mounting base

full-cycle operation	$R_{th\ j\text{-}mb}$	=	1.2	K/W
half-cycle operation	$R_{th\ j\text{-}mb}$	=	1.7	K/W
Transient thermal impedance; t = 1 ms	$Z_{th\ j\text{-}mb}$	=	0.1	K/W

Influence of mounting method

1. Heatsink mounted with clip (see mounting instructions)

Thermal resistance from mounting base to heatsink

a. with heatsink compound	$R_{th\ mb\text{-}h}$	=	0.3	K/W
b. with heatsink compound and 0.06 mm maximum mica insulator	$R_{th\ mb\text{-}h}$	=	1.4	K/W
c. with heatsink compound and 0.1 mm maximum mica insulator (56369)	$R_{th\ mb\text{-}h}$	=	2.2	K/W
d. with heatsink compound and 0.25 mm maximum alumina insulator (56367)	$R_{th\ mb\text{-}h}$	=	0.8	K/W
e. without heatsink compound	$R_{th\ mb\text{-}h}$	=	1.4	K/W

2. Free-air operation

The quoted values of $R_{th\ j\text{-}a}$ should be used only when no leads of other dissipating components run to the same tie-point.

Thermal resistance from junction to ambient in free air: mounted on a printed-circuit board at a = any lead length	$R_{th\ j\text{-}a}$	=	60	K/W

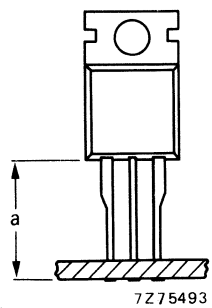

Fig.2

CHARACTERISTICS (T_j = 25 °C unless otherwise stated)

Polarities, positive or negative, are identified with respect to T_1.

Voltages and currents (in either direction)

On-state voltage (measured under pulse conditions to prevent excessive dissipation)				
I_T = 20 A	V_T	<	1.6	V
Rate of rise of off-state voltage that will not trigger any device; T_j = 120 °C; gate open circuit				
BT139 series	dV_D/dt	<	100	V/µs
BT139 series G	dV_D/dt	<	200	V/µs
BT139 series F	dV_D/dt	<	50	V/µs
BT139 series E	dV_D/dt	typ.	50	V/µs
Rate of change of commutating voltage that will not trigger any device when $-dI_{com}/dt$ = 7.2 A/ms; $I_{T(RMS)}$ = 16 A; T_{mb} = 70 °C; gate open circuit ; $V_D = V_{DWMmax}$				
BT139 series	dV_{com}/dt	typ.	10	V/µs
BT139 series G	dV_{com}/dt	<	10	V/µs
BT139 series F	dV_{com}/dt	typ.	10	V/µs
Off-state current				
$V_D = V_{DWMmax}$; T_j = 120 °C;	I_D	<	0.5	mA
Gate voltage that will trigger all devices	V_{GT}	>	1.5	V
Gate voltage that will not trigger any device $V_D = V_{DWMmax}$; T_j = 120 °C; T_2 and G positive or negative	V_{GD}	<	250	mV

Gate current that will trigger all devices (I_{GT}); G to T_1

Holding current (I_H)

Latching current (I_L); V_D = 12 V

			T_2+ G+	T_2+ G−	T_2- G−	T_2- G+	
BT139 series	I_{GT}	>	35	35	35	70	mA
	I_H	<	30	30	30	30	mA
	I_L	<	40	60	40	60	mA
BT139 series G	I_{GT}	>	50	50	50	100	mA
	I_H	<	60	60	60	60	mA
	I_L	<	60	90	60	90	mA
BT139 series F	I_{GT}	>	25	25	25	70	mA
	I_H	<	30	30	30	30	mA
	I_L	<	40	60	40	60	mA
BT139 series E	I_{GT}	>	10	10	10	25	mA
	I_H	<	30	30	30	30	mA
	I_L	<	30	40	30	40	mA

MOUNTING INSTRUCTIONS

1. The device may be soldered directly into the circuit, but the maximum permissible temperature of the soldering iron or bath is 275 °C; it must not be in contact with the joint for more than 5 seconds. Soldered joints must be at least 4.7 mm from the seal.
2. The leads should not be bent less than 2.4 mm from the seal, and should be supported during bending. The leads can be bent, twisted or straightened by 90° maximum. The minimum bending radius is 1 mm.
3. It is recommended that the circuit connection be made to tag T_2, rather than direct to the heatsink.
4. Mounting by means of a spring clip is the best mounting method because it offers:
   a. a good thermal contact under the crystal area and slightly lower $R_{th\ mb\text{-}h}$ values than screw mounting.
   b. safe isolation for mains operation.
   However, if a screw is used, it should be M3 cross-recess pan-head. Care should be taken to avoid damage to the plastic body.
5. For good thermal contact, heatsink compound should be used between mounting base and heatsink. Values of $R_{th\ mb\text{-}h}$ given for mounting with heatsink compound refer to the use of a metallic oxide-loaded compound. Ordinary silicone grease is not recommended.
6. Rivet mounting (only possible for non-insulated mounting)

   Devices may be rivetted to flat heatsinks; such a process must neither deform the mounting tab, nor enlarge the mounting hole. The maximum recommended hole size for rivet mounting is 3.5 mm. The pre-formed head of the rivet should be on the device side and any rivet tool used should not damage the plastic body of the device.
7. The heatsink must have a flatness in the mounting area of 0.02 mm maximum per 10 mm. Mounting holes must be deburred.

OPERATING NOTES

Dissipation and heatsink considerations:

a. The various components of junction temperature rise above ambient are illustrated in Fig.3.

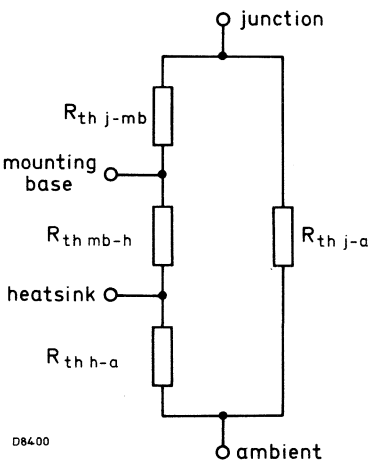

Fig.3.

b. The method of using Fig.4 is as follows:
Starting with the required current on the $I_{T(RMS)}$ axis, trace upwards to meet the appropriate conduction angle curve. Trace right horizontally and upwards from the appropriate value on the T_{amb} scale. The intersection determines the $R_{th\ mb\text{-}a}$. The heatsink thermal resistance value ($R_{th\ h\text{-}a}$) can now be calculated from:

$$R_{th\ h\text{-}a} = R_{th\ mb\text{-}a} - R_{th\ mb\text{-}h}.$$

c. Any measurement of heatsink temperature should be made immediately adjacent to the device.

FULL-CYCLE OPERATION

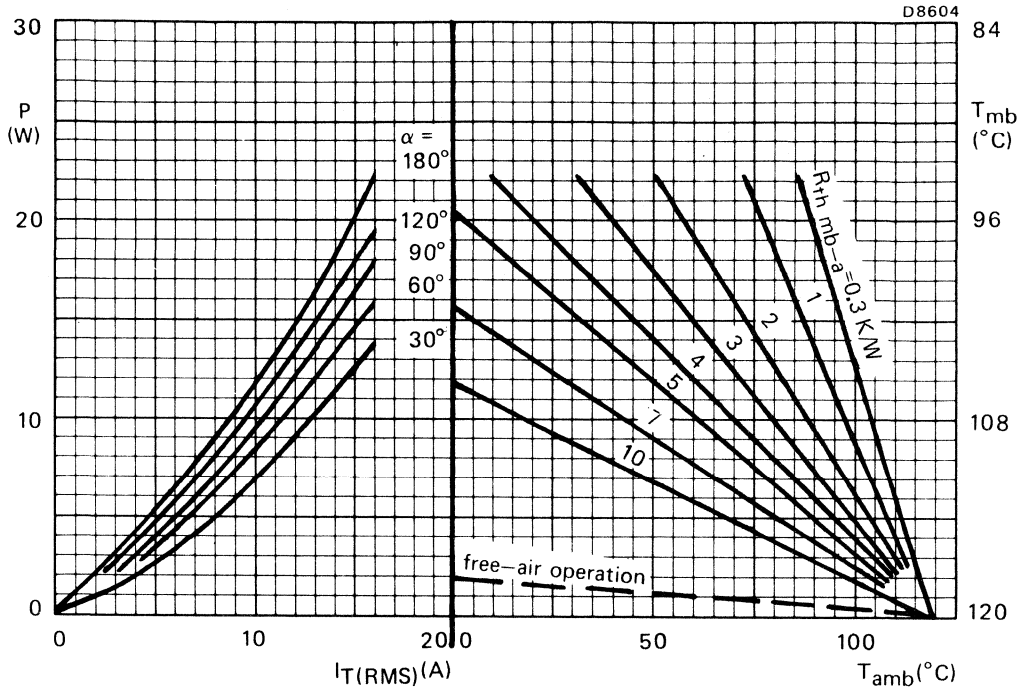

Fig. 4 The right-hand part shows the interrelationship between the power (derived from the left-hand part) and the maximum permissible temperatures.

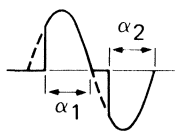

$\alpha = \alpha_1 = \alpha_2$: conduction angle per half cycle

OVERLOAD OPERATION

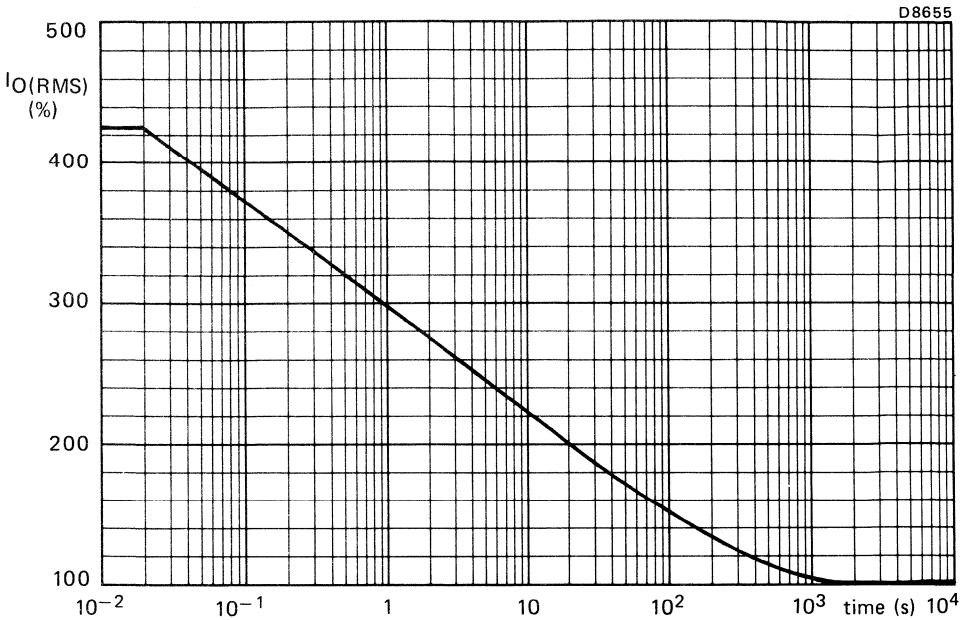

Fig.6 Maximum permissible duration of steady overload (provided that T_{mb} does not exceed 120 °C during and after overload) expressed as a percentage of the steady state r.m.s. rated current. For high r.m.s. overload currents precautions should be taken so that the temperature of the terminals does not exceed 125 °C. During these overload conditions the triac may lose control. Therefore the overload should be terminated by a separate protection device.

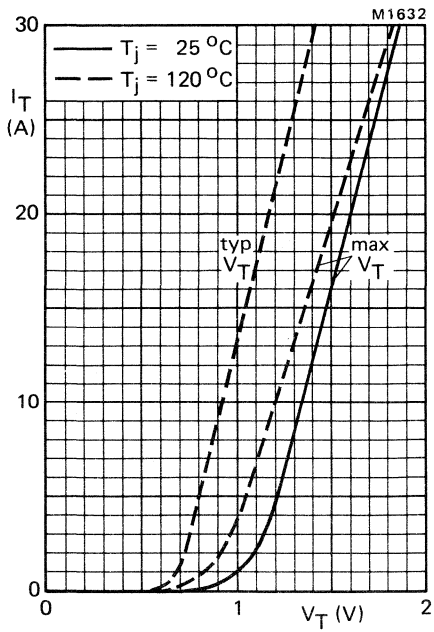

Fig.7

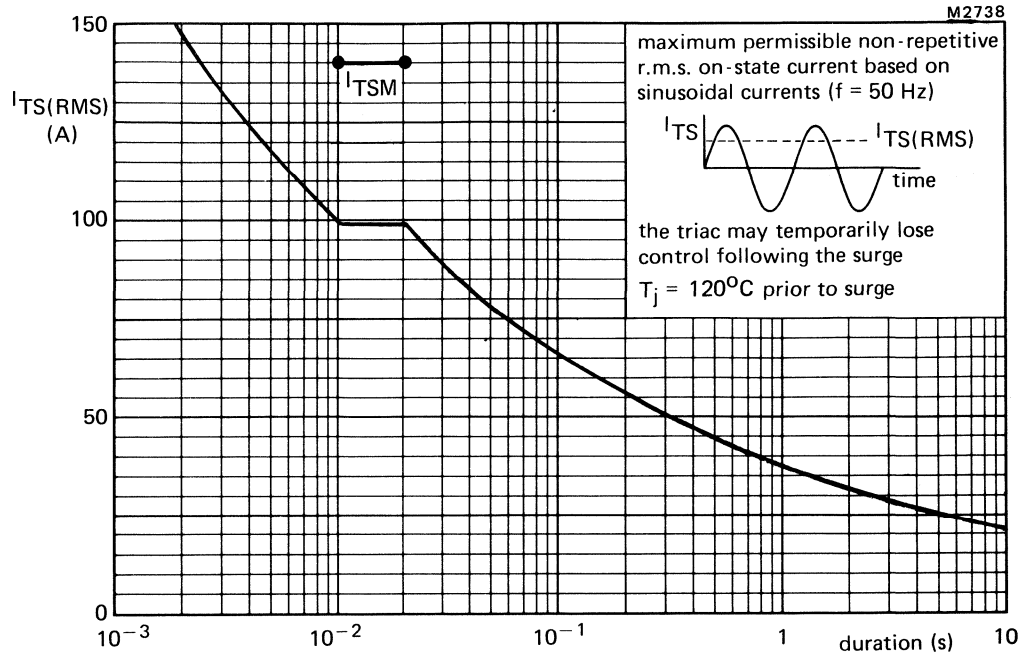
M2738
150
100
50
0
$I_{TS(RMS)}$ (A)
I_{TSM}
maximum permissible non-repetitive r.m.s. on-state current based on sinusoidal currents (f = 50 Hz)
I_{TS}
$I_{TS(RMS)}$
time
the triac may temporarily lose control following the surge
T_j = 120°C prior to surge
10^{-3}
10^{-2}
10^{-1}
1
duration (s)
10

Fig.8

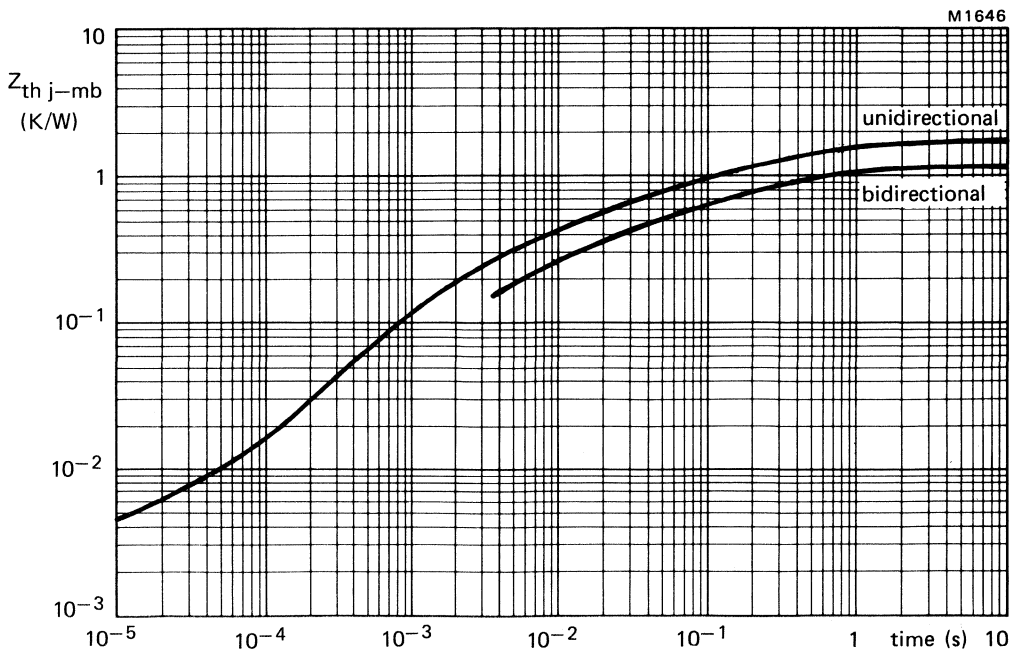
M1646
10
1
10^{-1}
10^{-2}
10^{-3}
$Z_{th\ j-mb}$ (K/W)
unidirectional
bidirectional
10^{-5}
10^{-4}
10^{-3}
10^{-2}
10^{-1}
1
time (s)
10

Fig.9

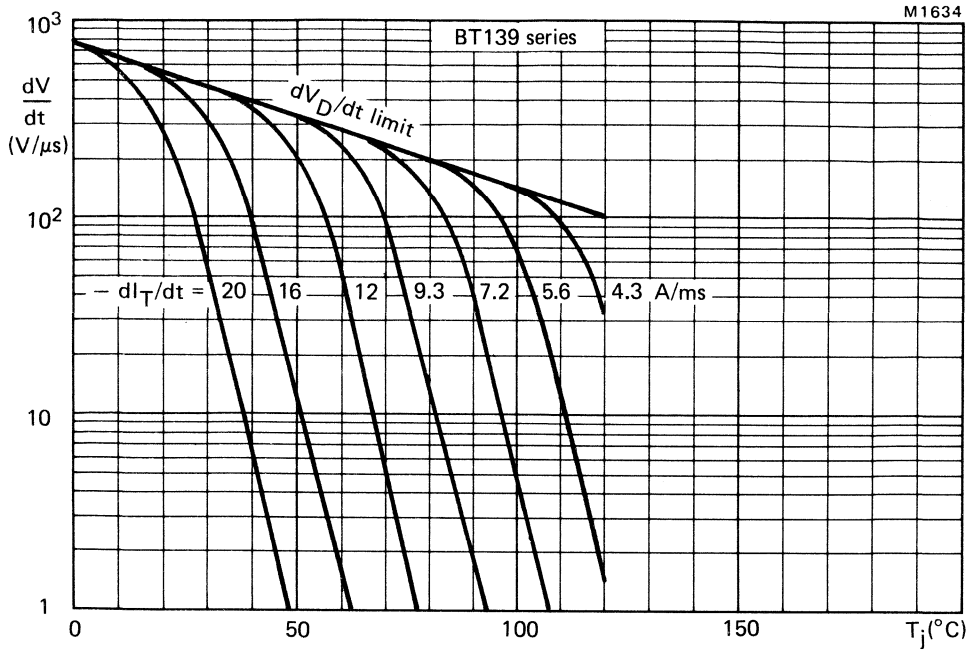

Fig.10 Typical commutation dV/dt for BT139 series versus T_j. The triac should commutate when the dV/dt is below the value on the appropriate curve for pre-commutation dI_T/dt.

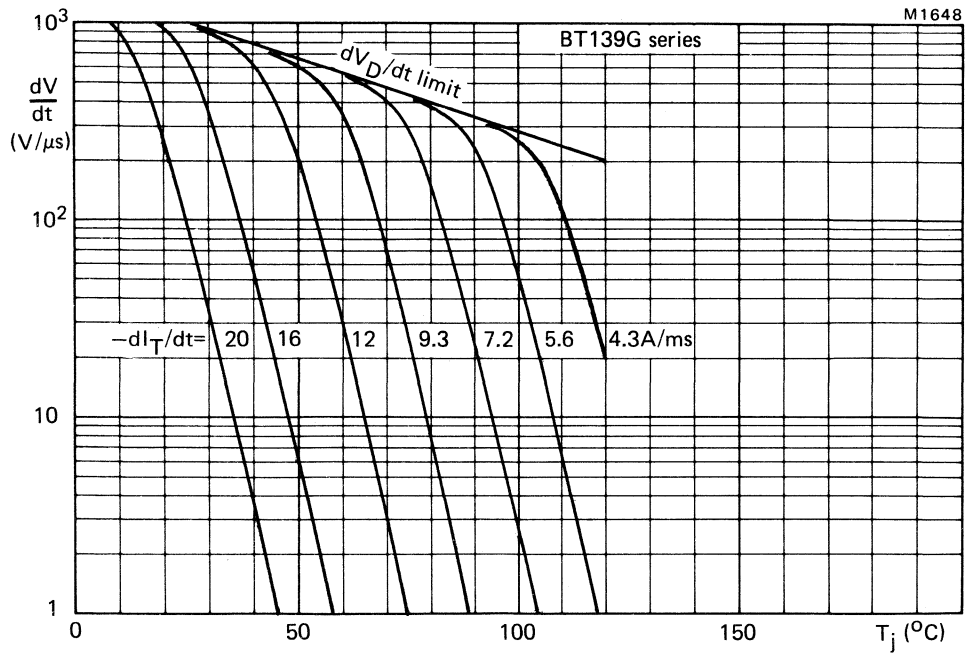

Fig.11 Limit commutation dV/dt for BT139G series versus T_j. The triac should commutate when the dV/dt is below the value on the appropriate curve for pre-commutation dI_T/dt.

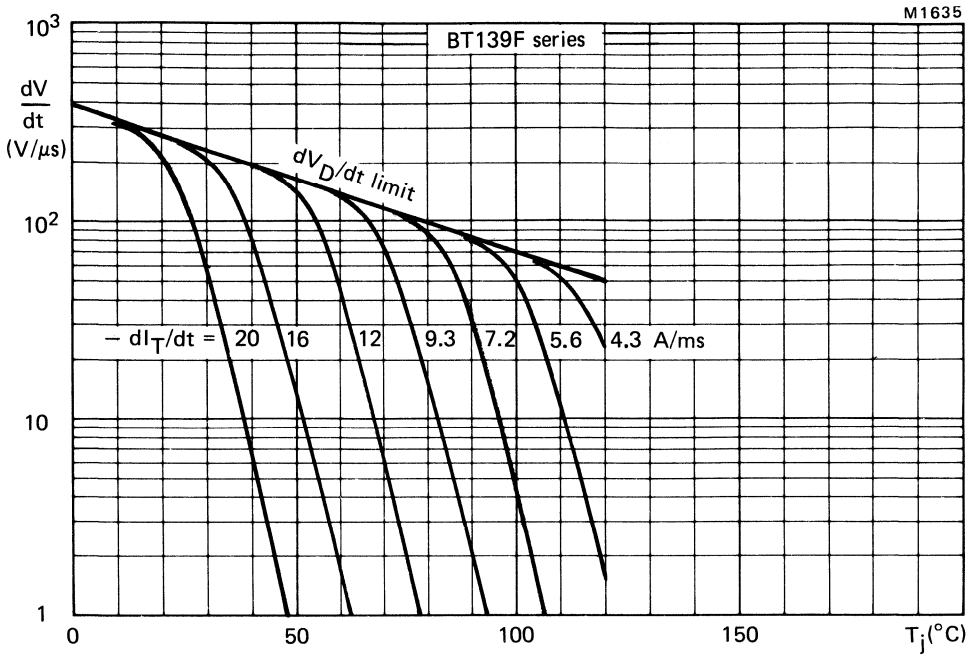

Fig.12 Typical commutation dV/dt for BT139F series versus T_j. The triac should commutate when the dV/dt is below the value on the appropriate curve for pre-commutation dI_T/dt.

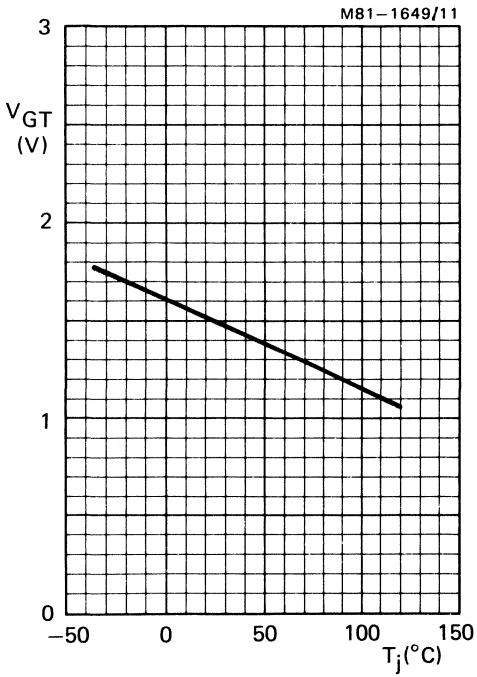

Fig.13 Minimum gate voltage that will trigger all devices; all conditions.

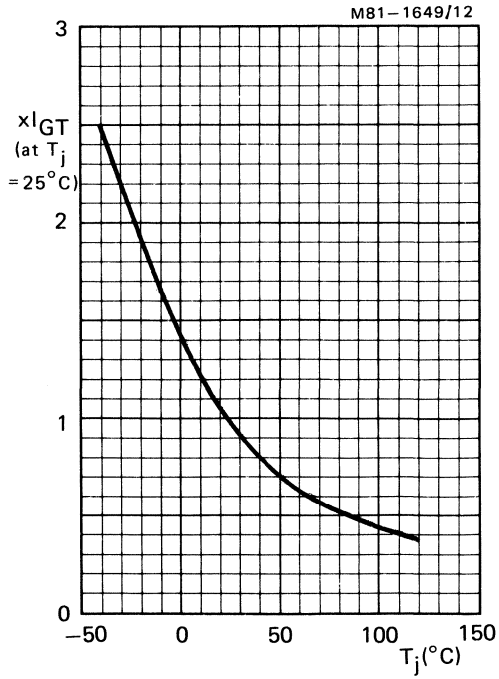

Fig.14 Normalised gate current that will trigger all devices; all conditions.

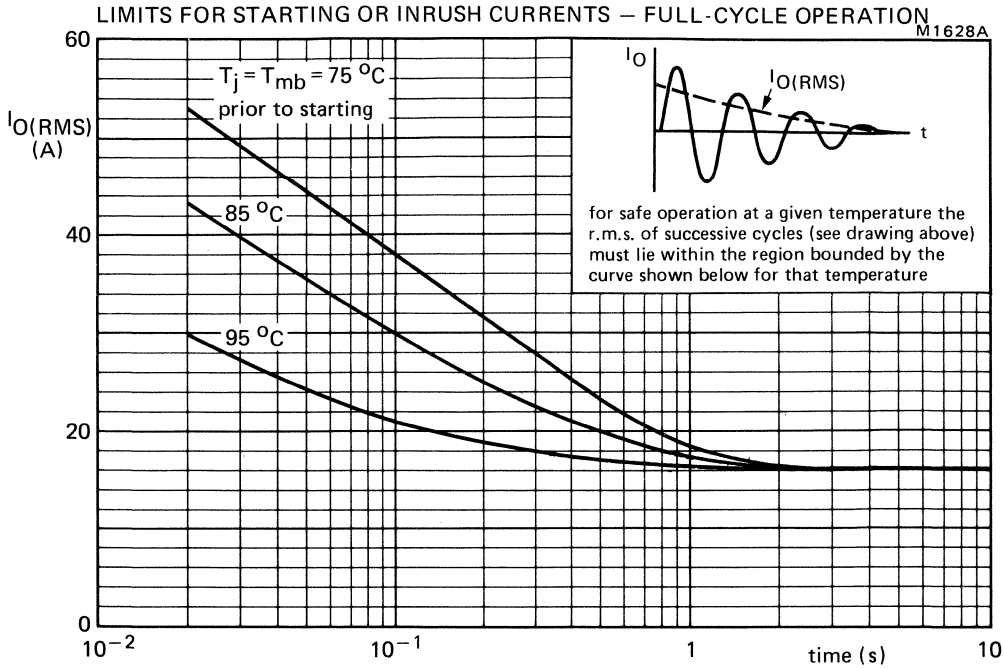
LIMITS FOR STARTING OR INRUSH CURRENTS – FULL-CYCLE OPERATION
M1628A
60
40
20
0
$I_{O(RMS)}$ (A)
$T_j = T_{mb} = 75\ ^oC$
prior to starting
85 °C
95 °C
10^{-2}
10^{-1}
1
10
time (s)
I_O
$I_{O(RMS)}$
t
for safe operation at a given temperature the r.m.s. of successive cycles (see drawing above) must lie within the region bounded by the curve shown below for that temperature

Fig.15

FULL-PACK TRIACS

Glass-passivated 16 ampere triacs in SOT-186 envelopes, which feature an electrically isolated mounting base. They are intended for use in applications requiring high bidirectional transient and blocking voltage capability. Typical applications include AC power control circuits such as lighting, industrial and domestic heating, motor control and switching systems.

QUICK REFERENCE DATA

			BT139F–500	600	700	800	
Repetitive peak off-state voltage	V_{DRM}	max.	500	600	700	800	V
RMS on-state current	$I_{T(RMS)}$	max.		16			A
Non-repetitive peak on-state current							
at 50 Hz	I_{TSM}	max.		140			A
at 60 Hz	I_{TSM}	max.		150			A

MECHANICAL DATA

Dimensions in mm

Fig.1 SOT-186

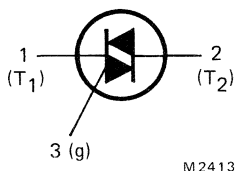

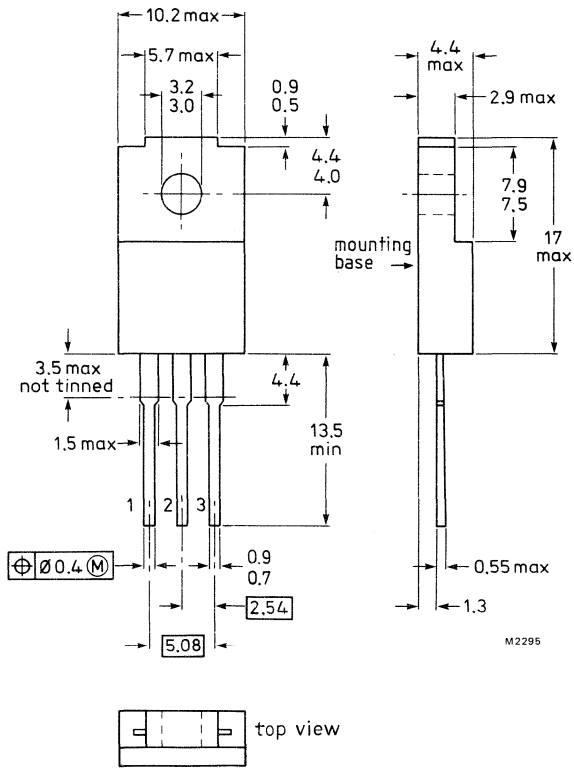

Net mass: 2 g.

The mounting base is electrically isolated from all terminals.

Accessories supplied on request (see data sheets Mounting instructions for F-pack devices and Accessories for SOT-186 envelopes).

RATINGS

Limiting values in accordance with the Absolute Maximum System (IEC 134).

Voltages (in either direction)			BT139F–500	600	700	800	
Non-repetitive peak off-state voltage ($t \leqslant 10$ ms)	V_{DSM}	max.	500*	600*	700*	800	V
Repetitive peak off-state voltage ($\delta \leqslant 0.01$)	V_{DRM}	max.	500	600	700	800	V
Crest working off-state voltage	V_{DWM}	max.	400	400	400	400	V

Currents (in either direction)				
RMS on-state current (conduction angle 360°) up to T_h = 67 °C	$I_{T(RMS)}$	max.	16	A
Repetitive peak on-state current	I_{TRM}	max.	140	A
Non-repetitive peak on-state current; T_j = 120 °C prior to surge; full sinewave				
t = 20 ms	I_{TSM}	max.	140	A
t = 16.7 ms	I_{TSM}	max.	150	A
I^2t for fusing (t = 10 ms)	I^2t	max.	95	A^2s
Rate of rise of on-state current after triggering with I_G = 200 mA to I_T = 20 A; dI_G/dt = 0.2 A/μs	dI_T/dt	max.	30	A/μs

Gate to terminal 1

Power dissipation				
Average power dissipation (averaged over any 20 ms period)	$P_{G(AV)}$	max.	0.5	W
Peak power dissipation	P_{GM}	max.	5.0	W

Temperatures				
Storage temperature	T_{stg}		−40 to +125	°C
Full-cycle operating temperature	T_j	max.	120	°C

ISOLATION

From all three terminals to external heatsink (peak)**	$V_{(isol)M}$	min.	1500	V
Capacitance from T_2 to external heatsink	$C_{(isol)}$	typ.	12	pF

*Although not recommended, off-state voltages up to 800 V may be applied without damage, but the triac may switch into the on-state. The rate of rise of on-state current should not exceed 15 A/μs.

**Measured with relative humidity <65% under clean and dust-free conditions.

THERMAL RESISTANCE

1. Heatsink-mounted with clip (see mounting instructions)

Thermal resistance from junction to external heatsink

With heatsink compound	$R_{th\ j\text{-}h}$	=	3.5	K/W
Without heatsink compound	$R_{th\ j\text{-}h}$	=	4.5	K/W

2. Free-air operation

The quoted values of $R_{th\ j\text{-}a}$ should be used only when no leads of other dissipating components run to the same tie-point.

Thermal resistance from junction to ambient in free air: mounted on a printed-circuit board at a = any lead length	$R_{th\ j\text{-}a}$	=	55	K/W

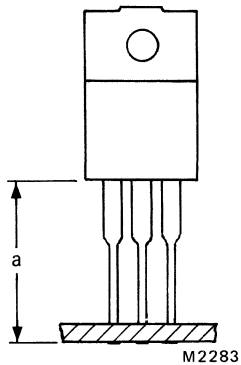

Fig.2

CHARACTERISTICS (T_j = 25 °C unless otherwise stated)

Polarities, positive or negative, are identified with respect to T_1.

Voltages and currents (in either direction)

On-state voltage (measured under pulse conditions to prevent excessive dissipation)				
I_T = 20 A	V_T	<	1.6	V
Rate of rise of off-state voltage that will not trigger any device; T_j = 120 °C; gate open circuit				
BT139F series	dV_D/dt	<	100	V/µs
BT139F series G	dV_D/dt	<	200	V/µs
BT139F series F	dV_D/dt	<	50	V/µs
BT139F series E	dV_D/dt	typ.	50	V/µs
Rate of change of commutating voltage that will not trigger any device when $-dI_{com}/dt$ = 7.2 A/ms; $I_{T(RMS)}$ = 16 A; T_h = 70 °C; gate open circuit; $V_D = V_{DWMmax}$				
BT139F series	dV_{com}/dt	typ.	10	V/µs
BT139F series G	dV_{com}/dt	<	10	V/µs
BT139F series F	dV_{com}/dt	typ.	10	V/µs
Off-state current				
$V_D = V_{DWMmax}$; T_j = 120 °C;	I_D	<	0.5	mA
Gate voltage that will trigger all devices	V_{GT}	>	1.5	V
Gate voltage that will not trigger any device $V_D = V_{DWMmax}$; T_j = 120 °C T_2 and G positive or negative	V_{GD}	<	250	mV

Gate current that will trigger all devices (I_{GT}); G to T_1

Holding current (I_H)

Latching current (I_L); V_D = 12 V

			T_2^+ G+	T_2^+ G−	T_2^- G−	T_2^- G+	
BT139F series	I_{GT}	>	35	35	35	70	mA
	I_H	<	30	30	30	30	mA
	I_L	<	40	60	40	60	mA
BT139F series G	I_{GT}	>	50	50	50	100	mA
	I_H	<	60	60	60	60	mA
	I_L	<	60	90	60	90	mA
BT139F series F	I_{GT}	>	25	25	25	70	mA
	I_H	<	30	30	30	30	mA
	I_L	<	40	60	40	60	mA
BT139F series E	I_{GT}	>	10	10	10	25	mA
	I_H	<	30	30	30	30	mA
	I_L	<	30	40	30	40	mA

MOUNTING INSTRUCTIONS

1. The triac may be soldered directly into the circuit, but the maximum permissible temperature of the soldering iron or bath is 275 °C; it must not be in contact with the joint for more than 5 seconds. Soldered joints must be at least 4.7 mm from the seal.
2. The leads should not be bent less than 2.4 mm from the seal, and should be supported during bending. The leads can be bent, twisted or straightened by 90° maximum. The minimum bending radius is 1 mm.
3. Mounting by means of a spring clip is the best mounting method because it offers good thermal contact under the crystal area and slightly lower $R_{th\ j\text{-}h}$ values than screw mounting. However, if a screw is used, it should be M3 cross-recess pan-head. Care should be taken to avoid damage to the plastic body.
4. For good thermal contact heatsink compound should be used between mounting base and heatsink. Values of $R_{th\ j\text{-}h}$ given for mounting with heatsink compound refer to the use of a metallic-oxide loaded compound. Ordinary silicone grease is not recommended.
5. Rivet mounting is not recommended.
6. The heatsink must have a flatness in the mounting area of 0.02 mm maximum per 10 mm. Mounting holes must be deburred.

OPERATING NOTES

Dissipation and heatsink considerations:

a. The various components of junction temperature rise above ambient are illustrated in Fig.3.

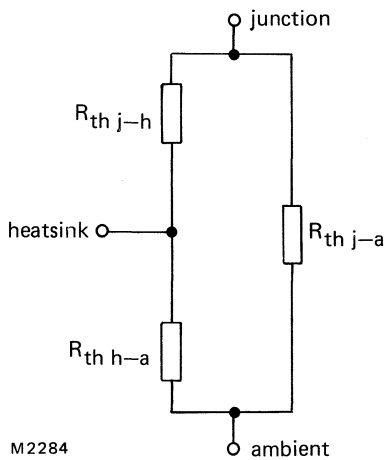

Fig.3.

b. The method of using Figs.4 and 5 is as follows:
Starting with the required current on the $I_{T(RMS)}$ axis (l.h. graph) trace upwards to meet the appropriate conduction angle curve. Trace left from curve to obtain power P. Trace right from curve to obtain T_h (r.h. graph). Trace upwards from T_{amb}, intersect with T_h determines $R_{th\ h\text{-}a}$, required heatsink thermal resistance.

c. Any measurement of heatsink temperature should be made immediately adjacent to the device.

FULL-CYCLE OPERATION (with heatsink compound)

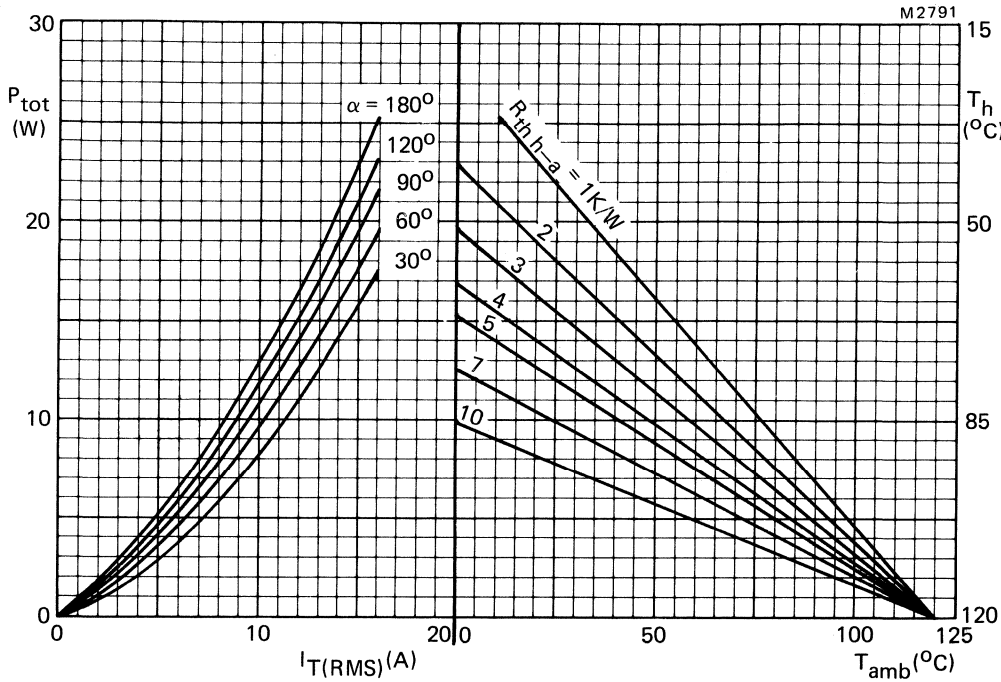

Fig. 4 The right-hand part shows the interrelationship between the power (derived from the left-hand part) and the maximum permissible temperatures.

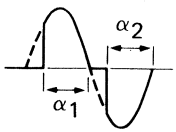

$\alpha = \alpha_1 = \alpha_2$: conduction angle per half cycle

FULL-WAVE CONDUCTION (without heatsink compound)

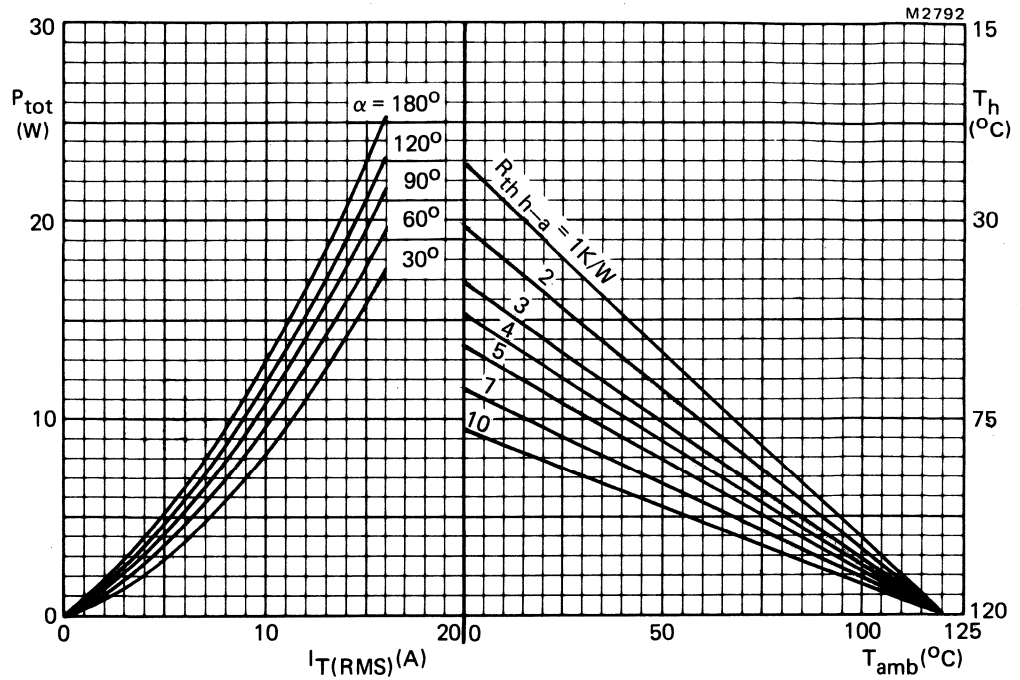

Fig.5 The right-hand part shows the interrelationship between the power (derived from the left-hand part) and the maximum permissible temperatures.

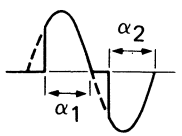

$\alpha = \alpha_1 = \alpha_2$: conduction angle per half cycle

OVERLOAD OPERATION

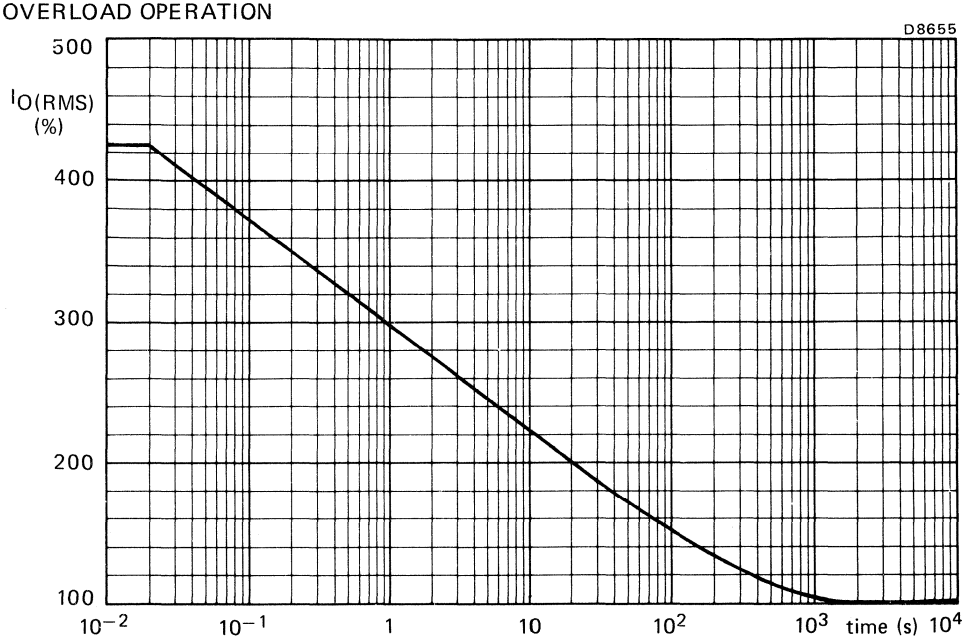

Fig.6 Maximum permissible duration of steady overload (provided that T_{mb} does not exceed 120 °C during and after overload) expressed as a percentage of the steady state r.m.s. rated current. For high r.m.s. overload currents precautions should be taken so that the temperature of the terminals does not exceed 125 °C. During these overload conditions the triac may lose control. Therefore the overload should be terminated by a separate protection device.

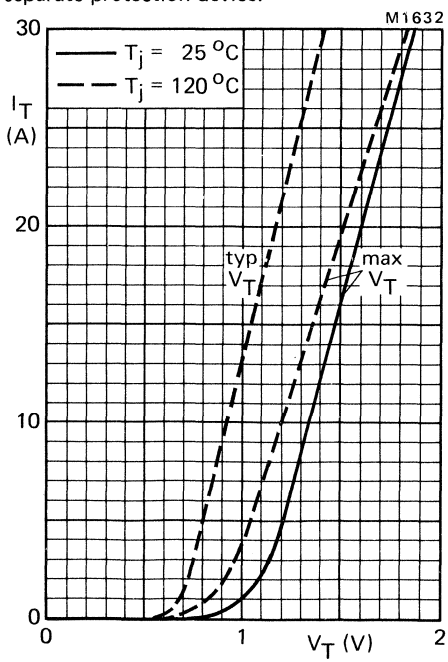

Fig.7

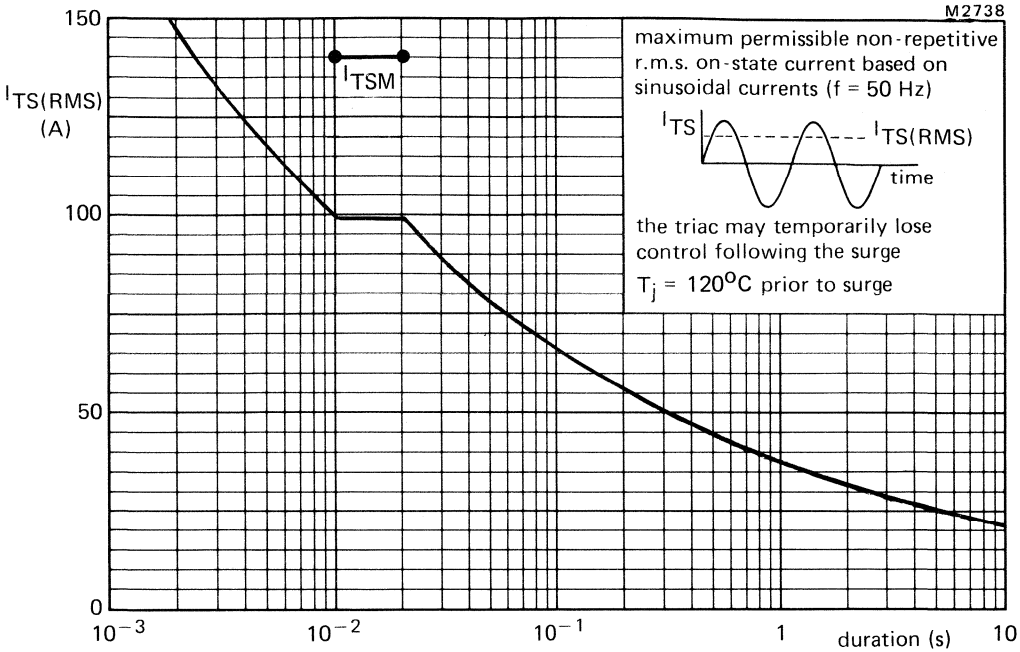

Fig.8

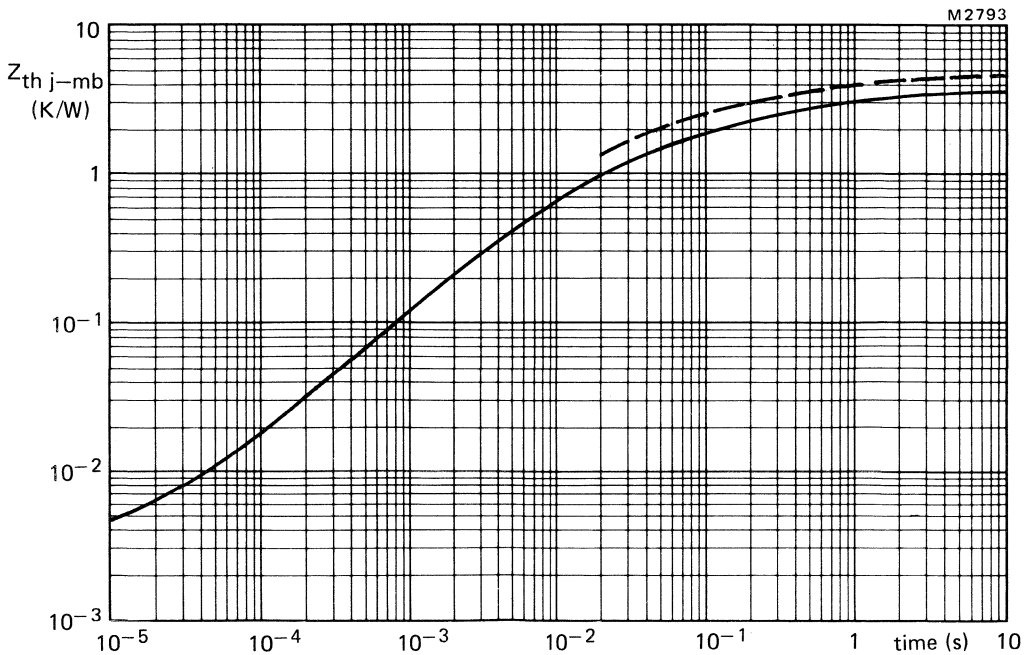

Fig.9 Transient thermal impedance; ——with heatsink compound; – – – without heatsink compound.

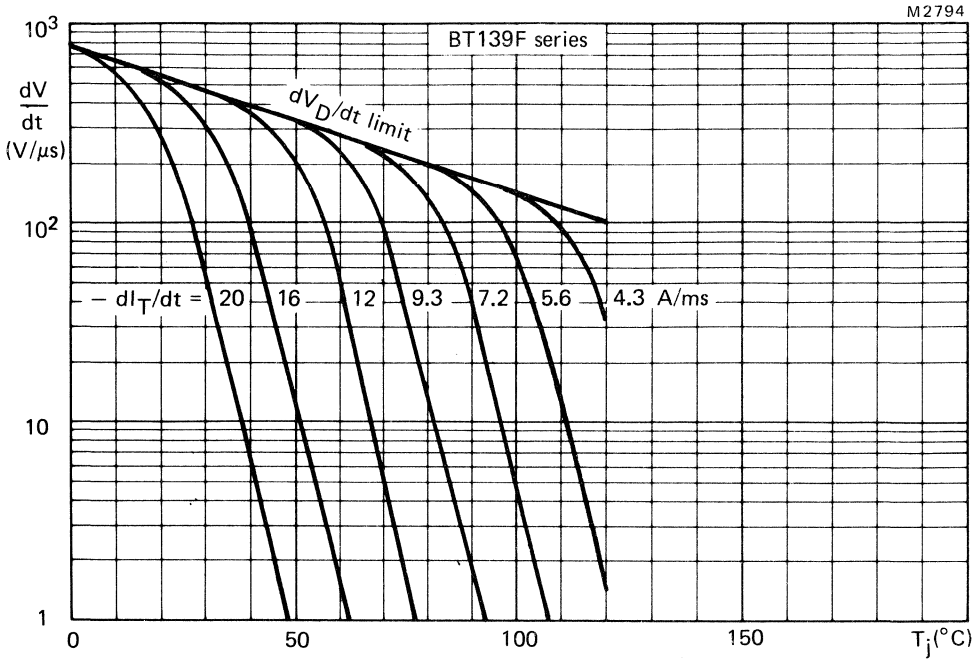

Fig.10 Typical commutation dV/dt for BT139F series versus T_j. The triac should commutate when the dV/dt is below the value on the appropriate curve for pre-commutation dI_T/dt.

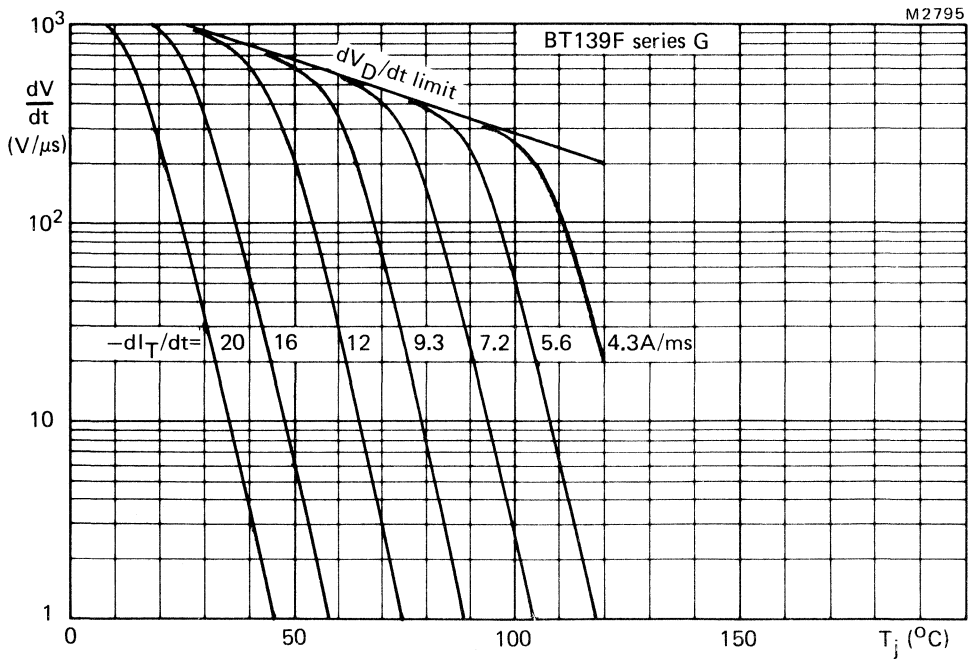

Fig.11 Limit commutation dV/dt for BT139F series G versus T_j. The triac should commutate when the dV/dt is below the value on the appropriate curve for pre-commutation dI_T/dt.

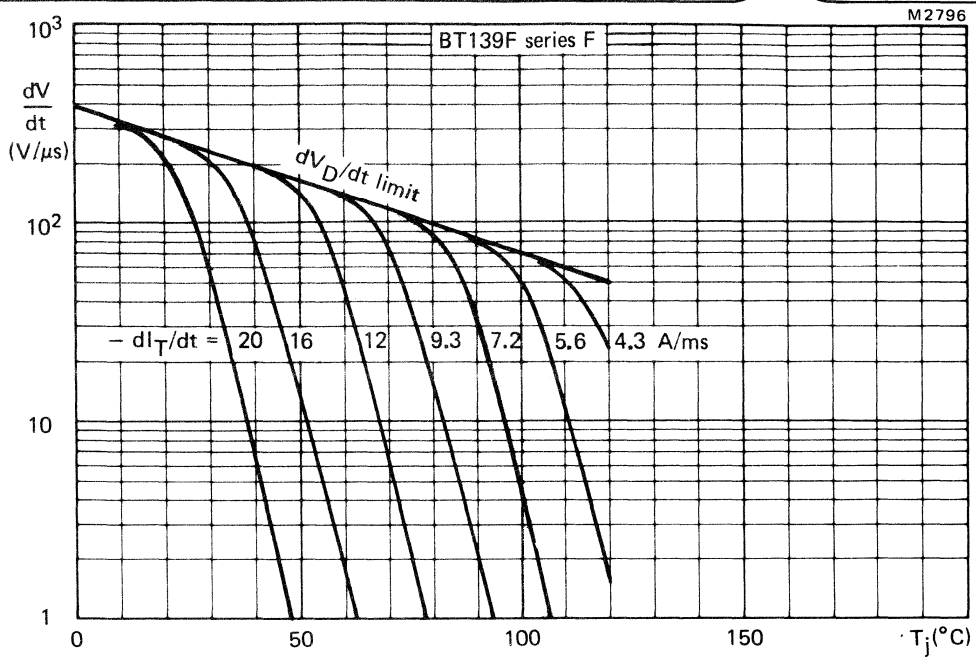

Fig.12 Typical commutation dV/dt for BT139F series F versus T_j. The triac should commutate when the dV/dt is below the value on the appropriate curve for pre-commutation dI_T/dt.

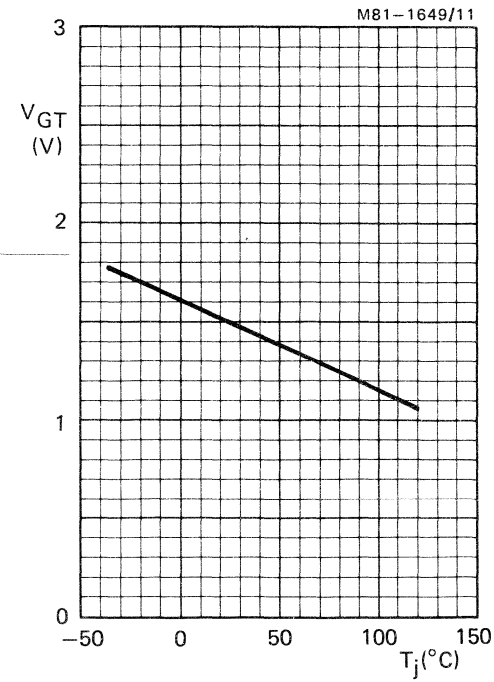

Fig. 13 Minimum gate voltage that will trigger all devices; all conditions.

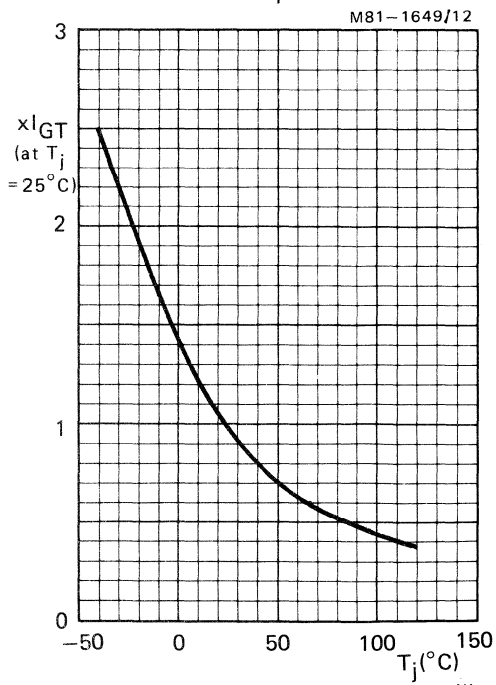

Fig. 14 Normalised gate current that will trigger all devices; all conditions.

LIMITS FOR STARTING OR INRUSH CURRENTS – FULL-CYCLE OPERATION

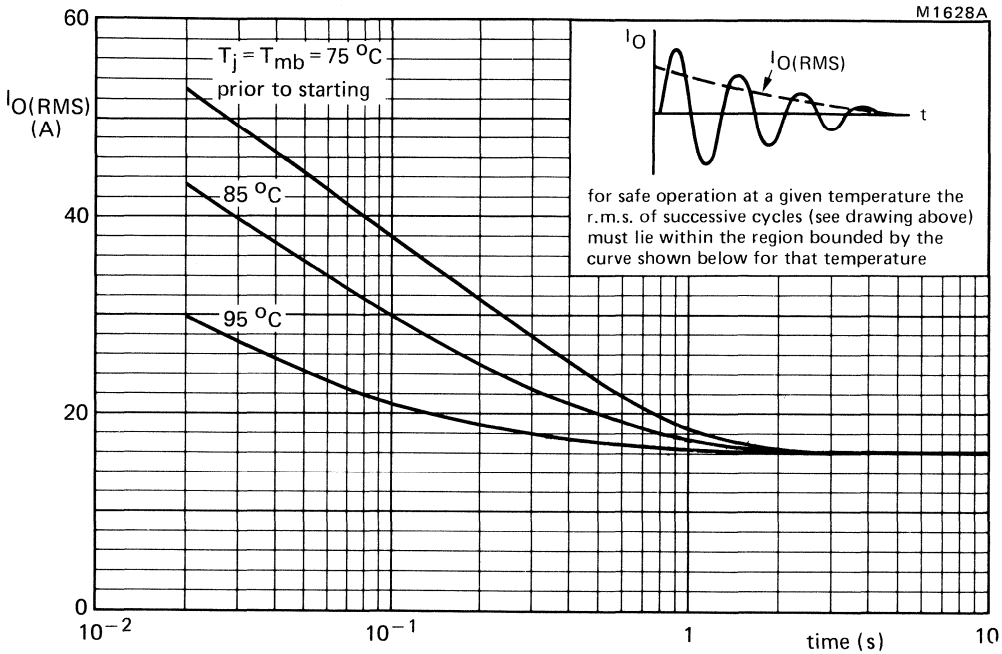

Fig.15.

THYRISTORS

Glass-passivated 25 ampere thyristors intended for use in applications involving high fatigue stress due to thermal cycling and repeated switching. These thyristors feature a high surge current capability. Typical applications include motor and heating control, regulators for transfomerless power supply circuits, relay and coil pulsing and power supply crowbar protection circuits.

QUICK REFERENCE DATA

			BT145-500R	600R	800R	
Repetitive peak voltages	V_{DRM}/V_{RRM}	max.	500	600	800	V
Average on-state current	$I_{T(AV)}$	max.		16		A
R.M.S. on-state current	$I_{T(RMS)}$	max.		25		A
Non-repetitive peak on-state current	I_{TSM}	max.		300		A

MECHANICAL DATA

Dimensions in mm

Fig.1 TO–220AB

Pinning:

1 = Cathode

2 = Anode

3 = Gate

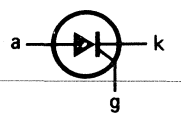

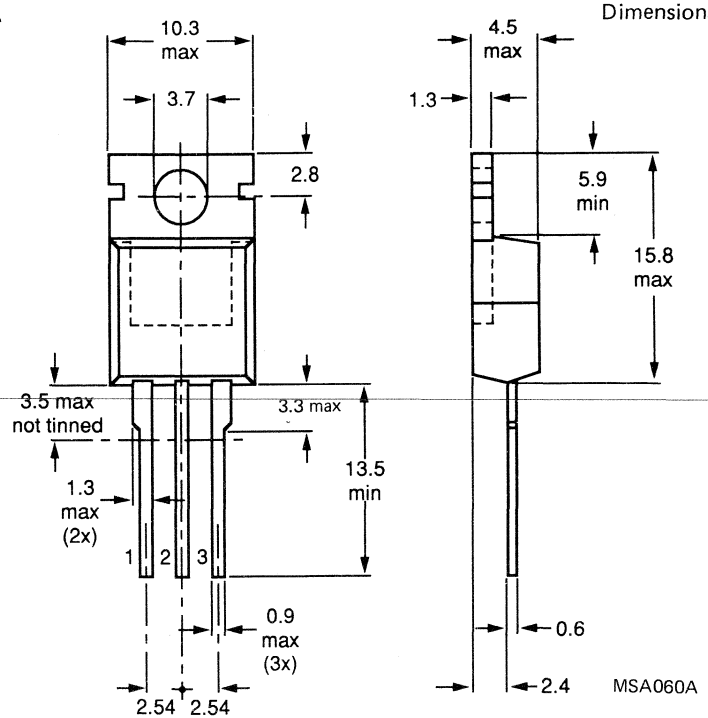

Net mass: 2 g

Note: The exposed metal mounting base is directly connected to the anode.

Accessories supplied on request: see data sheets Mounting instructions and accessories for TO–220 envelopes.

RATINGS

Limiting values in accordance with the Absolute Maximum System (IEC 134).

Anode to cathode			BT145-500R	600R	800R	
Non-repetitive peak voltages	V_{DSM}/V_{RSM}	max.	500	600	800	V*
Repetitive peak voltages	V_{DRM}/V_{RRM}	max.	500	600	800	V
Crest working voltages	V_{DWM}/V_{RWM}	max.	400	400	400	V
Continuous voltages	V_D/V_R	max.	400	400	400	V

Average on-state current (averaged over any 20 ms period) up to T_{mb} = 93 °C	$I_{T(AV)}$	max.	16	A
RMS on-state current	$I_{T(RMS)}$	max.	25	A
Repetitive peak on-state current	I_{TRM}	max.	300	A
Non-repetitive peak on-state current; t = 10 ms; half sinewave; T_j = 110 °C prior to surge; with reapplied $V_{RWM\,max}$	I_{TSM}	max.	300	A
I^2t for fusing (t = 10 ms)	I^2t	max.	450	A^2s
Rate of rise of on-state current after triggering with I_G = 160 mA to I_T = 50 A; dI_G/dt = 160 A/ms	dI_T/dt	max.	200	A/μs
Gate to cathode				
Reverse peak voltage	V_{RGM}	max.	5	V
Average power dissipation (averaged over any 20 ms period)	$P_{G(AV)}$	max.	0.5	W
Peak power dissipation; t ⩽ 10 μs	P_{GM}	max.	20	W
Temperature				
Storage temperature	T_{stg}		−40 to +150	°C
Junction temperature	T_j	max.	110	°C

THERMAL RESISTANCE

From junction to mounting base	$R_{th\ j\text{-}mb}$	=	1.0	K/W
From mounting base to heatsink with heatsink compound	$R_{th\ mb\text{-}h}$	=	0.3	K/W

*Although not recommended, higher off-state voltages may be applied without damage, but the thyristor may switch into the on-state. The rate of rise of on-state current should not exceed 15 A/μs.

THERMAL RESISTANCE

From junction to mounting base	$R_{th\ j\text{-}mb}$	=	1.0	K/W
Transient thermal impedance; t = 1 ms	$Z_{th\ j\text{-}mb}$	=	0.09	K/W

Influence of mounting method

1. Heatsink-mounted with clip (see mounting instructions)

Thermal resistance from mounting base to heatsink

a. with heatsink compound	$R_{th\ mb\text{-}h}$	=	0.3	K/W
b. with heatsink compound and 0.06 mm maximum mica insulator	$R_{th\ mb\text{-}h}$	=	1.4	K/W
c. with heatsink compound and 0.1 mm maximum mica insulator (56369)	$R_{th\ mb\text{-}h}$	=	2.2	K/W
d. with heatsink compound and 0.25 mm maximum alumina insulator (56367)	$R_{th\ mb\text{-}h}$	=	0.8	K/W
e. without heatsink compound	$R_{th\ mb\text{-}h}$	=	1.4	K/W

2. Free-air operation

The quoted values of $R_{th\ j\text{-}a}$ should be used only when no leads of other dissipating components run to the same tie-point.

Thermal resistance from junction to ambient in free air: mounted on a printed-circuit board at a = any lead length	$R_{th\ j\text{-}a}$	=	60	K/W

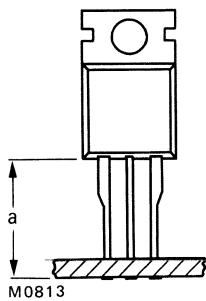

Fig.2.

CHARACTERISTICS

Anode to cathode

On-state voltage (measured under pulse conditions)				
I_T = 30 A; T_j = 25 °C	V_T	<	1.5	V
Rate of rise of off-sate voltage that will not trigger any device				
T_j = 110 °C; R_{GK} = open circuit	dV_D/dt	<	200	V/µs
Reverse current				
$V_R = V_{RWMmax}$; T_j = 110 °C	I_R	<	1.0	mA
Off-state current				
$V_D = V_{DWMmax}$; T_j = 110 °C	I_D	<	1.0	mA
Latching current; T_j = 25 °C	I_L	<	80	mA
Holding current; T_j = 25 °C	I_H	<	60	mA

Gate to cathode

Voltage that will trigger all devices				
V_D = 12 V; T_j = –40 °C	V_{GT}	>	1.5	V
V_D = 12 V; T_j = 25 °C	V_{GT}	>	1.0	V
Voltage that will not trigger any device				
$V_D = V_{DRMmax}$; T_j = 110 °C	V_{GD}	<	0.25	V
Current that will trigger all devices				
V_D = 12V; T_j = –40 °C	I_{GT}	>	55	mA
V_D = 12 V; T_j = 25 °C	I_{GT}	>	35	mA

Switching characteristics

Gate-controlled turn-on time ($t_{gt} = t_d + t_r$) when switched from $V_D = V_{DRMmax}$ to I_T = 40 A; I_{GT} = 100 mA; dI_G/dt = 5 A/µs; T_j = 25 °C	t_{gt}	typ.	2	µs

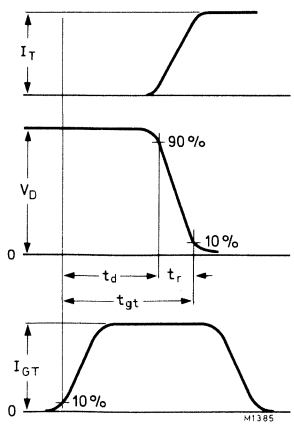

Fig.3 Gate controlled turn-on time definition.

MOUNTING INSTRUCTIONS

1. The device may be soldered directly into the circuit, but the maximum permissible temperature of the soldering iron or bath is 275 °C; it must not be in contact with the joint for more than 5 seconds. Soldered joints must be at least 4.7 mm from the seal.
2. The leads should not be bent less than 2.4 mm from the seal, and should be supported during bending. The leads can be bent, twisted or straightened by 90° maximum. The minimum bending radius is 1 mm.
3. It is recommended that the circuit connection be made to the anode tag, rather than direct to the heatsink.
4. Mounting by means of a spring clip is the best mounting method because it offers:
   a. a good thermal contact under the crystal area and slightly lower $R_{th\ mb\text{-}h}$ values than screw mounting.
   b. safe isolation for mains operation.
   However, if a screw is used, it should be M3 cross-recess pan-head. Care should be taken to avoid damage to the plastic body.
5. For good thermal contact, heatsink compound should be used between mounting base and heatsink. Values of $R_{th\ mb\text{-}h}$ given for mounting with heatsink compound refer to the use of a metallic oxide-loaded compound. Ordinary silicone grease is not recommended.
6. Rivet mounting (only possible for non-insulated mounting)

   Devices may be rivetted to flat heatsinks; such a process must neither deform the mounting tab, nor enlarge the mounting hole. The maximum recommended hole size for rivet mounting is 3.5 mm. The pre-formed head of the rivet should be on the device side and any rivet tool used should not damage the plastic body of the device.
7. The heatsink must have a flatness in the mounting area of 0.02 mm maximum per 10 mm. Mounting holes must be deburred.

OPERATING NOTES

Dissipation and heatsink considerations:

a. The various components of junction temperature rise above ambient are illustrated in Fig.4.

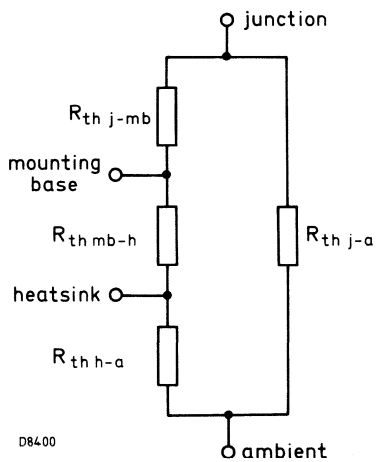

Fig.4

b. The method of using Fig.5 is as follows:
Starting with the required current on the $I_{T(AV)}$ axis, trace upwards to meet the appropriate form factor curve. Trace right horizontally and upwards from the appropriate value on the T_{amb} scale. The intersection determines the $R_{th\ mb\text{-}a}$. The heatsink thermal resistance value ($R_{th\ h\text{-}a}$) can now be calculated from:

$$R_{th\ h\text{-}a} = R_{th\ mb\text{-}a} - R_{th\ mb\text{-}h}.$$

c. Any measurement of heatsink temperature should be made immediately adjacent to the device.

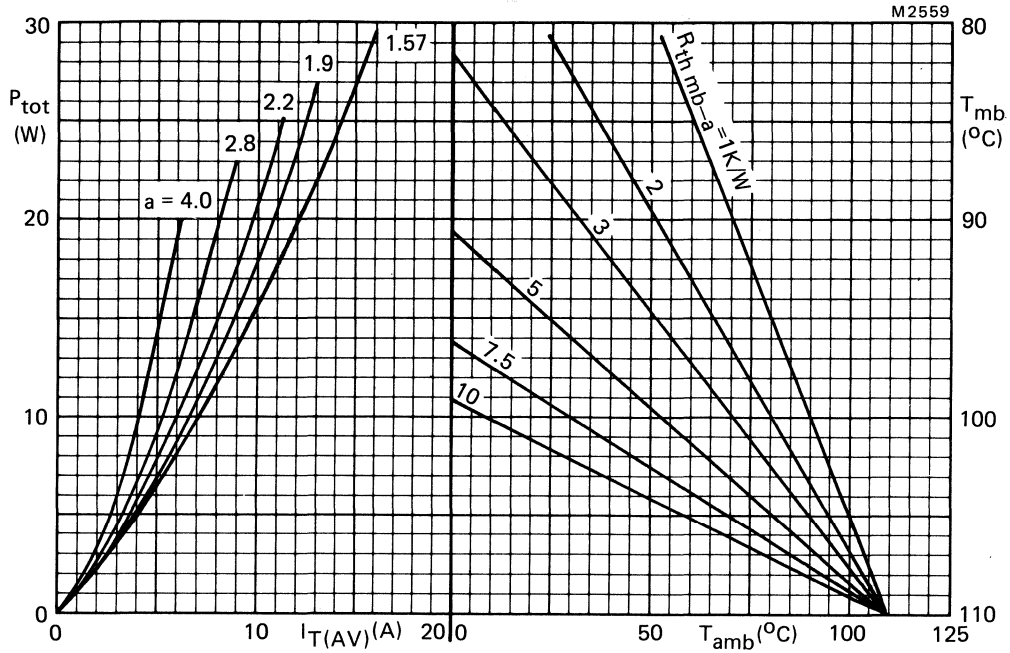

Fig.5 The right-hand part shows the interrelationship between the power (derived from the left-hand part) and the maximum permissible temperatures.

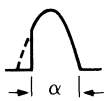

α = conduction angle per half cycle

$$a = \text{form factor} = \frac{I_{T\,(RMS)}}{I_{T(AV)}}$$

α	a
30°	4
60°	2.8
90°	2.2
120°	1.9
180°	1.57

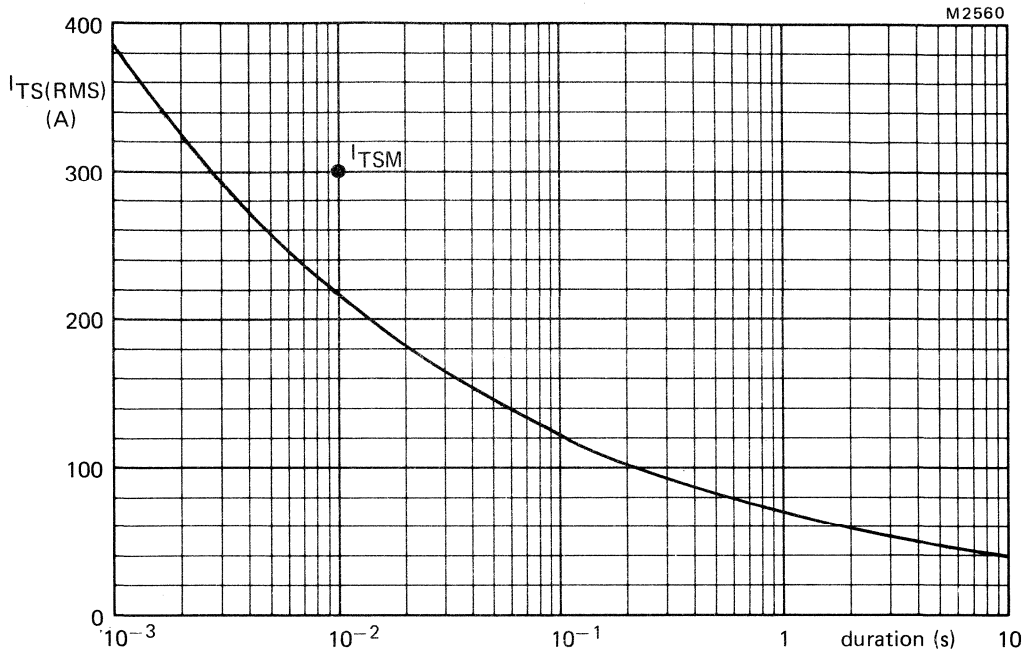

Fig.6 Maximum permissible non-repetitive r.m.s. on-state current based on sinusoidal currents (f=50Hz) with re-applied V_{RWMmax}; T_j = 110 °C prior to surge.

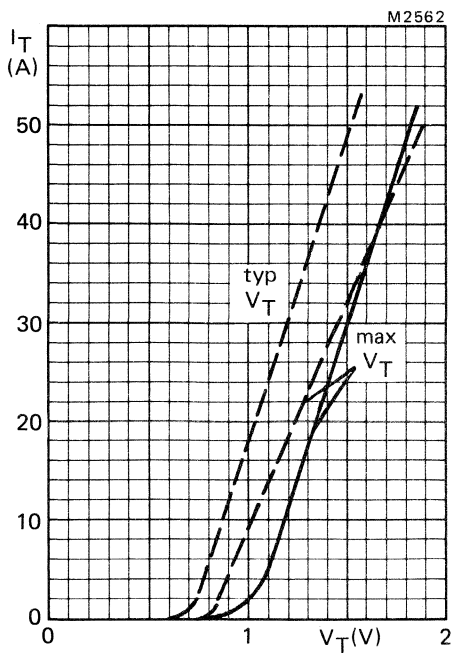

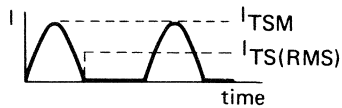

Fig.7 —— T_j = 25 °C; – – – T_j = 110 °C.

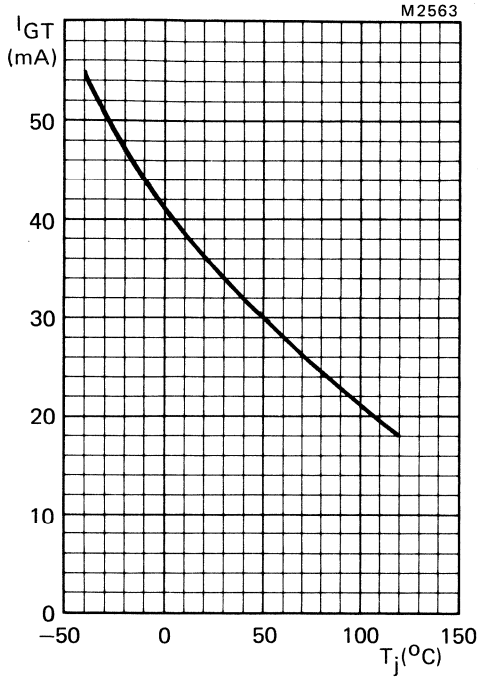

Fig.8 Minimum gate current that will trigger all devices as a function of junction temperature.

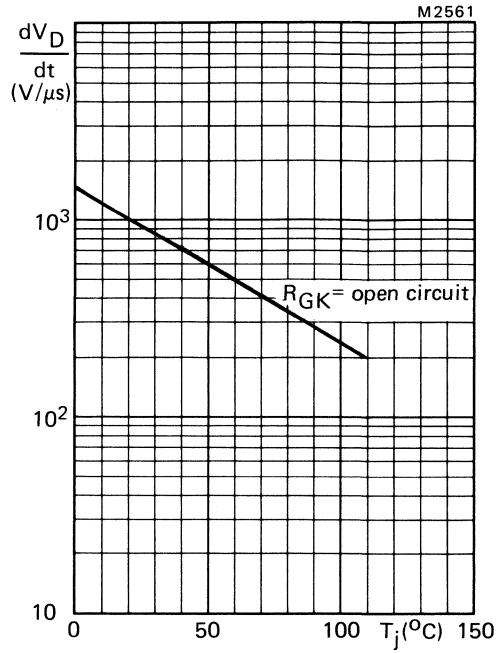

Fig.9 Maximum rate of rise of off-state voltage that will not trigger any device as a function of junction temperature.

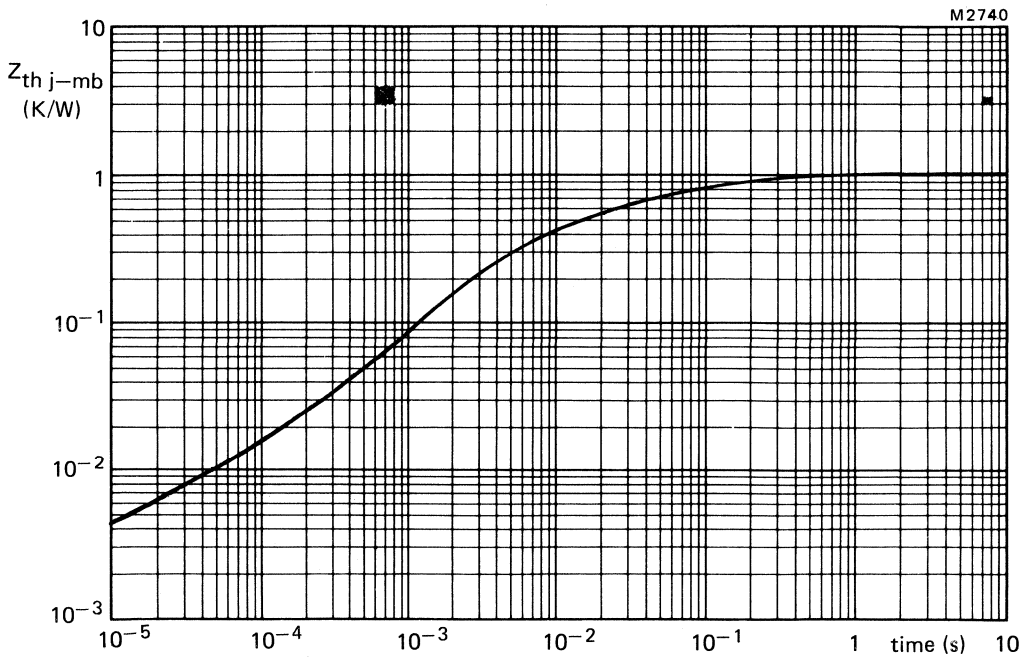

Fig.10 Transient thermal impedance.

THYRISTORS

Glass-passivated thyristor in SOT-82 envelope suitable for body mounting, featuring gate triggering as low as 200 μA. Particularly suitable in applications where high fatigue stresses due to thermal cycling and repeated switching are present. Typical applications include temperature and motor control, relay and coil pulsing and power supply crowbar protection circuits and regulators in transformerless power supply systems.

QUICK REFERENCE DATA

			BT148-400R	500R	600R	
Repetitive peak voltages	V_{DRM}/V_{RRM}	max.	400	500	600	V
Average on-state current	$I_{T(AV)}$	max.		2.5		A
R.M.S. on-state current	$I_{T(RMS)}$	max.		4		A
Non-repetitive on-state current	I_{TSM}	max.		25		A

MECHANICAL DATA

Dimensions in mm

Fig.1 SOT-82.

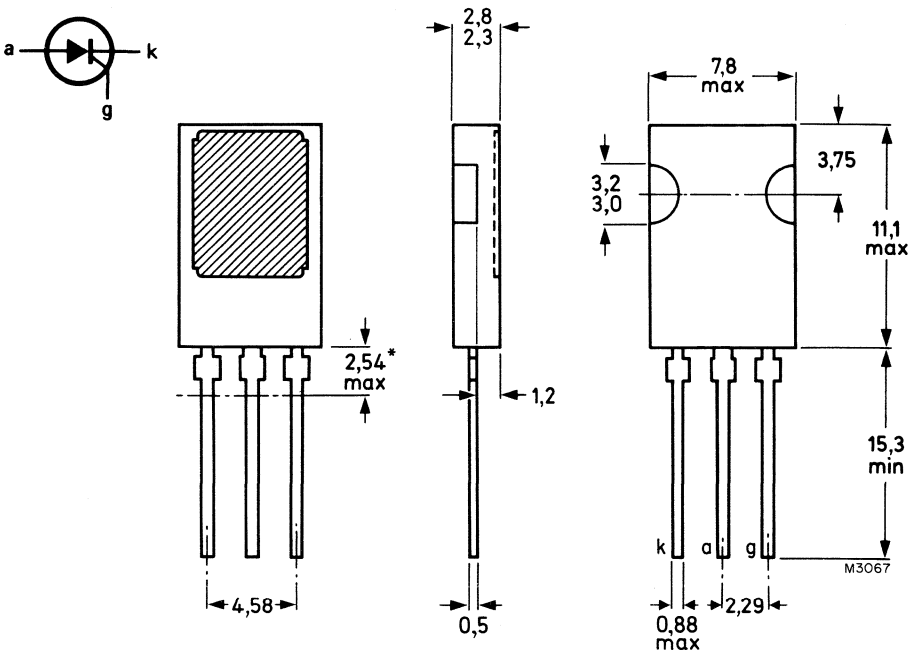

* Within this region the cross-section of the leads is uncontrolled.

Net mass: 0.8 g

Note: The exposed metal mounting base is directly connected to the anode.

Supplied on request: accessories (see data sheets Mounting instructions and accessories for SOT-82 envelopes).

RATINGS

Limiting values in accordance with the Absolute Maximum System (IEC 134).

Anode to cathode			BT148-400R	500R	600R	
Non-repetitive peak voltages†	V_{DSM}/V_{RSM}	max.	400	500	600	V*
Repetitive peak voltages†	V_{DRM}/V_{RRM}	max.	400	500	600	V
Crest working voltages	V_{DWM}/V_{RWM}	max.	400	400	400	V
Continuous voltages	V_D/V_R	max.	400	400	400	V
Average on-state current (averaged over any 20 ms period) up to T_{mb} = 98 °C	$I_{T(AV)}$	max.		2.5		A
R.M.S. on-state current	$I_{T(RMS)}$	max.		4		A
Repetitive peak on-state current	I_{TRM}	max.		25		A
Non-repetitive peak on-state current t = 10 ms; half sine-wave; T_j = 110 °C prior to surge; with reapplied V_{RWMmax}	I_{TSM}	max.		25		A
I^2t for fusing (t = 10 ms)	I^2t	max.		3		A^2s
Rate of rise of on-state current after triggering when I_G = 50 mA to I_T = 10A; dI_G/dt = 50 mA/μs	dI_T/dt	max.		50		A/μs
Gate to cathode						
Average power dissipation (averaged over any 20 ms period)	$P_{G(AV)}$	max.		0.5		W
Peak power dissipation	P_{GM}	max.		5		W
Temperatures						
Storage temperature	T_{stg}			−40 to + 125		°C
Junction temperature	T_j	max.		110		°C

†R_{GK} = 1 kΩ.

*Although not recommended, higher off-state voltages may be applied without damage, but the thyristor may switch into the on-state. The rate of rise of on-state current should not exceed 15 A/μs.

THERMAL RESISTANCE

From junction to mounting base	$R_{th\ j\text{-}mb}$	=	2.5	K/W
Transient thermal impedance; t = 1 ms	$Z_{th\ j\text{-}mb}$	=	0.2	K/W

Influence of mounting method

1. Heatsink mounted with clip (see mounting instructions)

Thermal resistance from mounting base to heatsink

a. with heatsink compound	$R_{th\ mb\text{-}h}$	=	0.3	K/W
b. with heatsink compound and 0.06 mm maximum mica insulator (56354)	$R_{th\ mb\text{-}h}$	=	1.4	K/W
c. without heatsink compound	$R_{th\ mb\text{-}h}$	=	1.4	K/W

2. Free air operation

The quoted values of $R_{th\ j\text{-}a}$ should be used only when no leads of other dissipating components run to the same tie-point.

Thermal resistance from junction to ambient in free air; mounted on a printed-circuit board at any lead length	$R_{th\ j\text{-}a}$	=	100	K/W

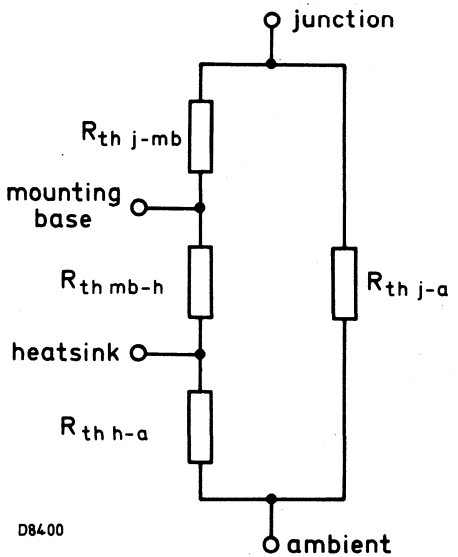

Fig.2 Components of thermal resistance.

CHARACTERISTICS (T_j = 25 °C unless otherwise stated)

Anode to cathode

On-state voltage I_T = 5 A	V_T	<	1.8	V*
Rate of rise of off-state voltage that will not trigger any device R_{GK} = 100 Ω; T_j = 110 °C	dV_D/dt	typ.	5	V/μs
Reverse current $V_R = V_{RWMmax}$; T_j = 110 °C	I_R	<	0.5	mA
Off-state current $V_D = V_{DWMmax}$; T_j = 110 °C	I_D	<	0.5	mA
Latching current	I_L	<	10	mA
Holding current	I_H	<	6	mA

Gate to cathode

Voltage that will trigger all devices V_D = 12 V	V_{GT}	>	1.5	V
V_D = 12 V; T_j = −40 °C	V_{GT}	>	2.3	V
Voltage that will not trigger any device V_D = 12 V; T_j = 110 °C	V_{GD}	<	250	mV
Current that will trigger all devices V_D = 12 V	I_{GT}	>	200	μA
V_D = 12 V; T_j = −40 °C	I_{GT}	>	260	μA

Switching characteristics

Gate-controlled turn-on time ($t_{gt} = t_d + t_r$) when switched from $V_D = V_{DWMax}$ to I_T = 10 A; I_{GT} = 5 mA; dI_G/dt = 0.2 A/μs	t_{gt}	typ.	2	μs

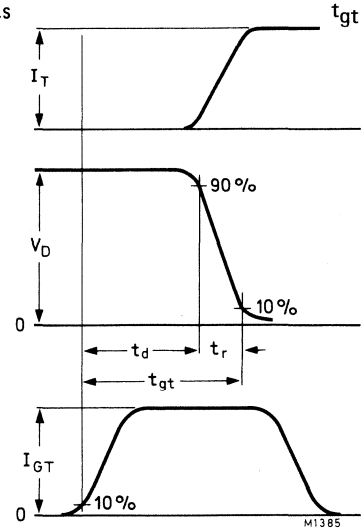

Fig.3 Gate-controlled turn-on time definition.

*Measured under pulse conditions to avoid excessive dissipation.

MOUNTING INSTRUCTIONS

1. The device may be soldered directly into the circuit. The maximum permissible soldering temperature is 275 °C. Heat must not be applied for more than 5 seconds. Soldered joints must be at least 4.7 mm from the body of the device.

2. The leads must not be bent less than 2.4 mm from the body of the device and should be supported during bending. The leads can be bent, twisted or straightened by 90° maximum. The minimum bending radius is 1 mm.

3. Any heatsink used must have a flatness in the mounting area of 0.02 mm maximum per 10 mm. Mounting holes must be deburred.

4. For spring-clip mounting a metallic-oxide loaded heatsink compound must be used to ensure good thermal contact between the mounting-base and heatsink. Ordinary silicone grease is not recommended.

5. Body mounting of the device into a hybrid circuit is possible either by soldering or by adhesive. For soldering either a copper-plate or anodized aluminium-plate with a copper layer are recommended. The device can be adhesively mounted to a ceramic substrate.

6. Any solder or adhesive layer used for body mounting must be as thin as possible with all air voids eliminated. This prevents excessive heat rise within the device.

OPERATING NOTES

Dissipation and heatsink considerations:

a. The method of using Fig.4 is as follows:
Starting with the required current on the $I_{T(AV)}$ or $I_{T(RMS)}$ axis, trace upwards to meet the appropriate form factor or conduction angle curve. Trace right horizontally and upwards from the appropriate value on the T_{amb} scale. The intersection determines the $R_{th\ mb\text{-}a}$. The heatsink thermal resistance value ($R_{th\ h\text{-}a}$) can now be calculated from:

$$R_{th\ h\text{-}a} = R_{th\ mb\text{-}a} - R_{th\ mb\text{-}h}.$$

b. Any measurement of heatsink temperature should be made immediately adjacent to the device.

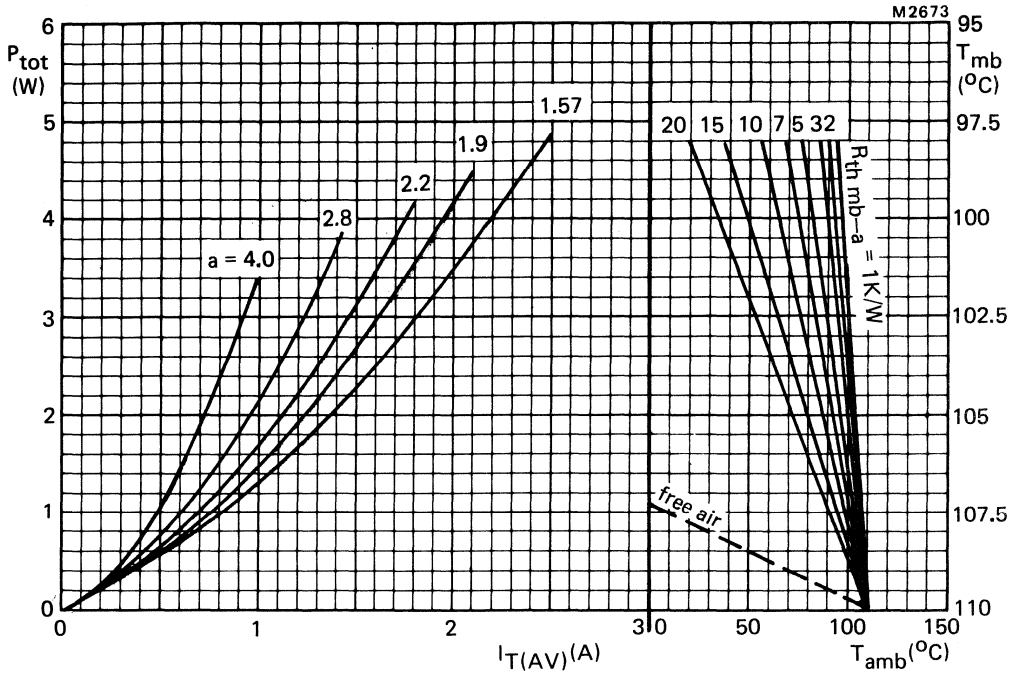

Fig.4 The right-hand part shows the interrelationship between the power (derived from the left-hand part) and the maximum permissible temperatures.

α = conduction angle per half circle

$$a = \text{form factor} = \frac{I_{T(RMS)}}{I_{T(AV)}}$$

α	a
30°	4
60°	2.8
90°	2.2
120°	1.9
180°	1.57

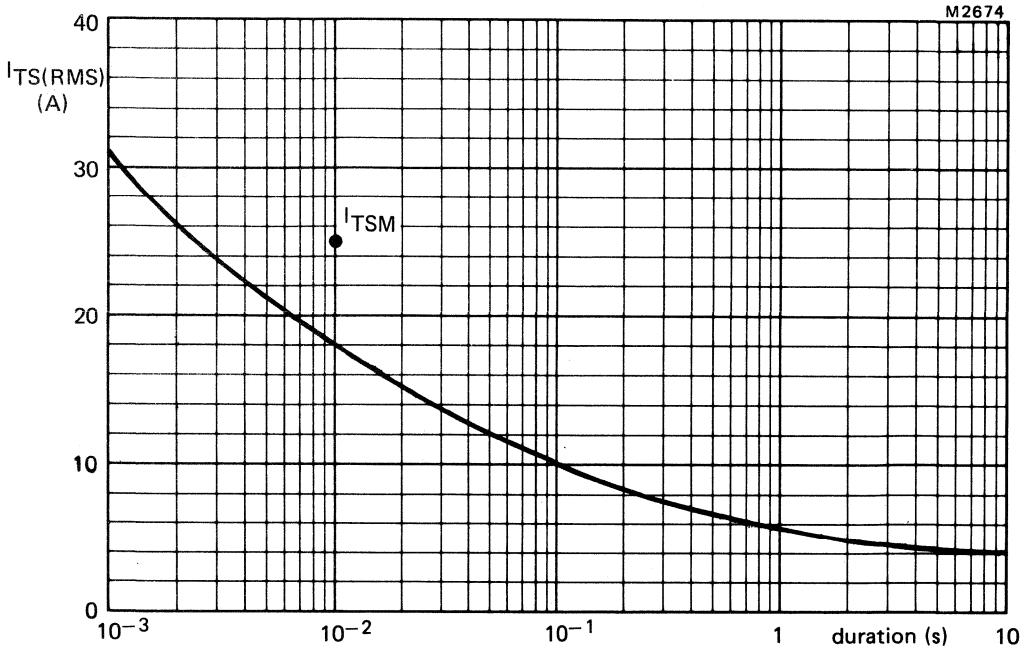

Fig.5 Maximum permissible non-repetitive r.m.s. on-state current based on sinusoidal currents (f = 50 Hz) with reapplied V_{RWMmax}. T_j = 110 °C prior to surge.

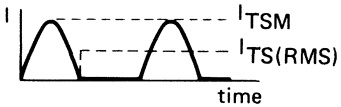

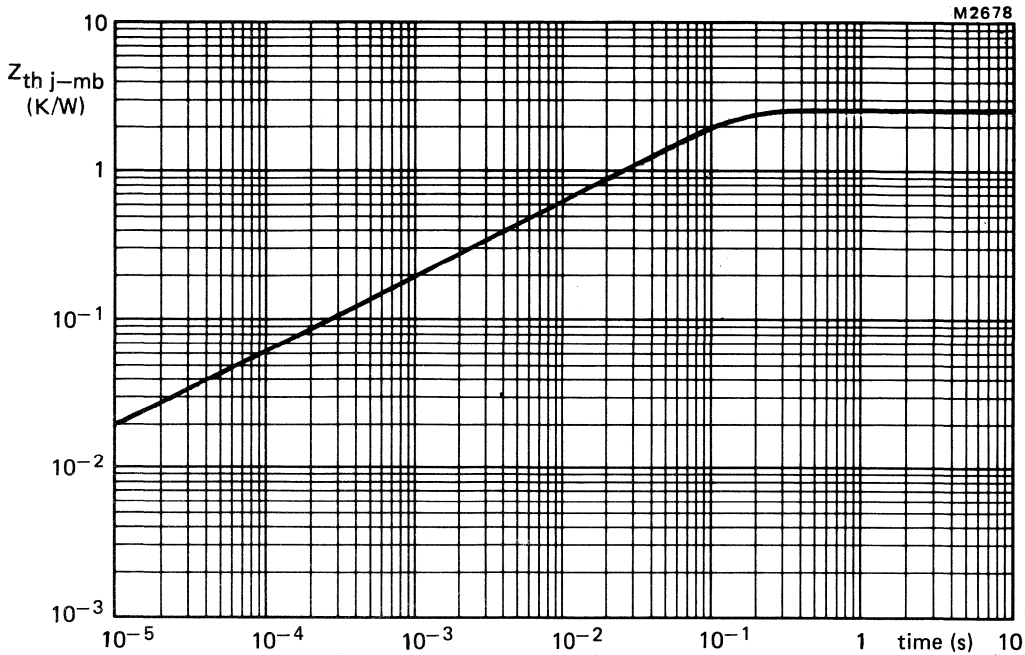

Fig.6 Transient thermal impedance.

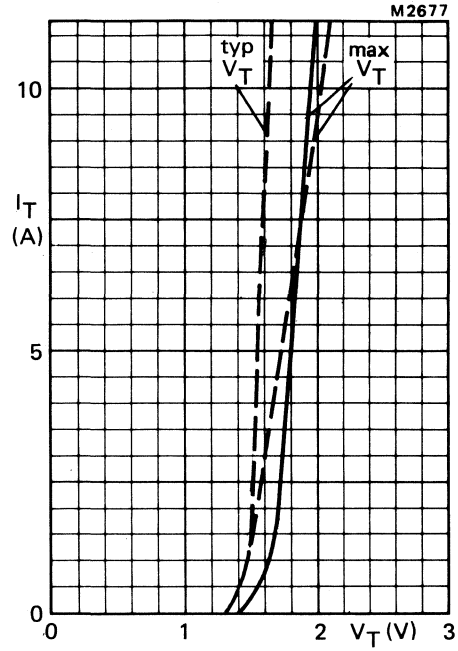

Fig.7 On-state voltage drop;
—— T_j = 25 °C; – – – T_j = 110 °C.

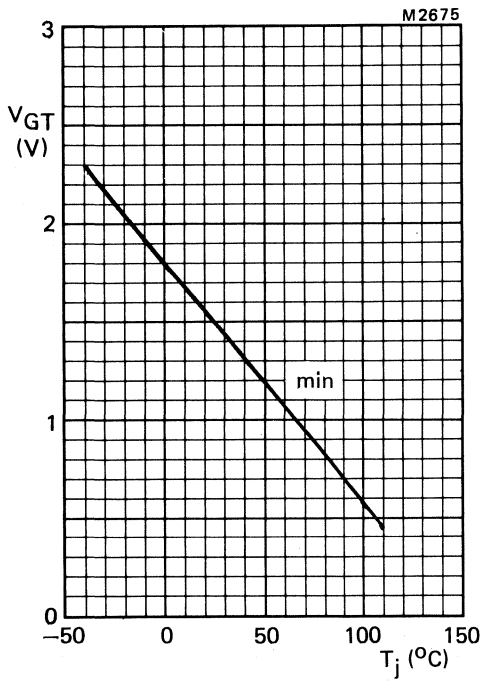

Fig.8 Minimum gate voltage that will trigger all devices as a function of junction temperature.

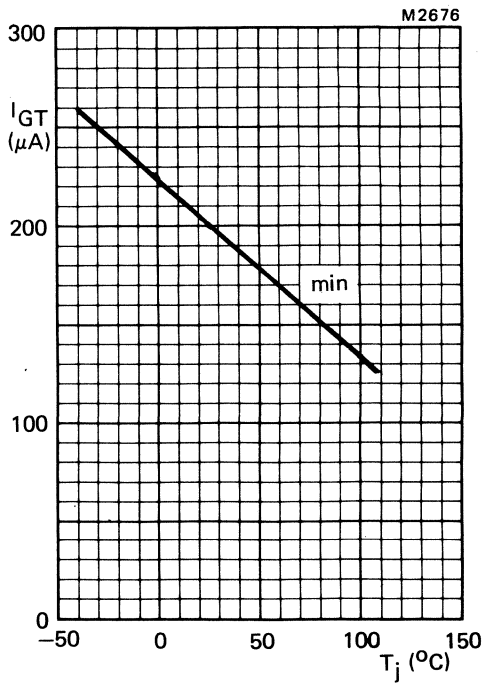

Fig.9 Minimum gate current that will trigger all devices as a function of junction temperature.

THYRISTORS

Glass-passivated, sensitive-gate thyristors in SOT-223 plastic envelopes suitable for surface mounting. They are intended for general purpose switching and phase-control applications.

QUICK REFERENCE DATA

			BT148W-400R	500R	600R	
Repetitive peak voltages	V_{DRM}/V_{RRM}	max.	400	500	600	V
Average on-state current	$I_{T(AV)}$	max.		0.6		A
RMS on-state current	$I_{T(RMS)}$	max.		1		A
Non-repetitive peak on-state current	I_{TSM}	max.		10		A
Gate trigger current	I_{GT}	>		200		μA

MECHANICAL DATA

Dimensions in mm

Fig. 1 SOT-223

Pinning:

1 = Cathode

2 = Anode

3 = Gate

4 = Anode (tab)

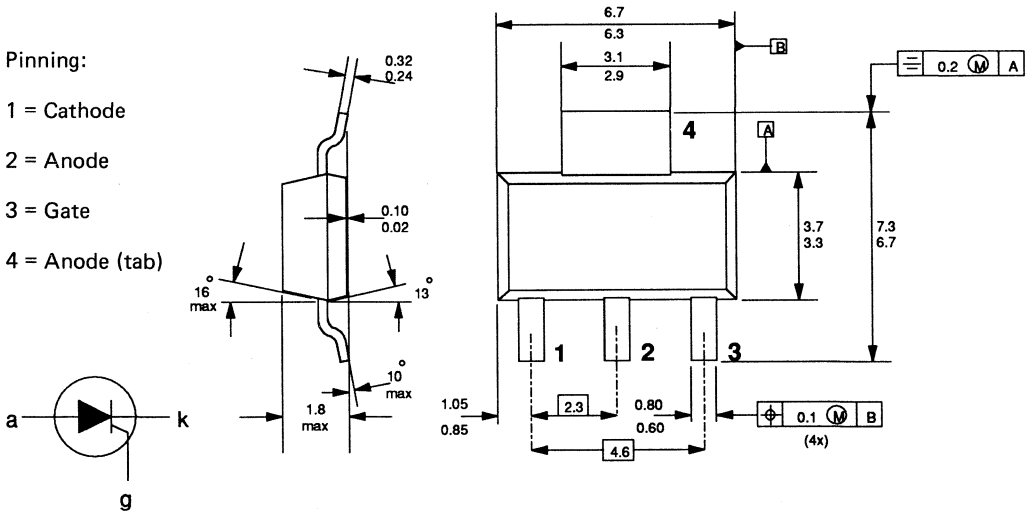

Net mass: 0.11 g.

Notes:

1 Refer to surface mounting instructions for SOT-223 envelope.

RATINGS

Limiting values in accordance with the Absolute Maximum System (IEC 134).

Anode to cathode			BT148W-400R	500R	600R	
Non-repetitive peak voltages†	V_{DSM}/V_{RSM}	max.	400	500	600	V
Repetitive peak voltages†	V_{DRM}/V_{RRM}	max.	400	500	600	V
Crest working voltages	V_{DWM}/V_{RWM}	max.	400	400	400	V
Continuous voltages	V_D/V_R	max.	400	400	400	V
Average on-state current (averaged over any 20 ms period) up to T_b = 84.5 °C	$I_{T(AV)}$	max.		0.6		A
RMS on-state current	$I_{T(RMS)}$	max.		1		A
Repetitive peak on-state current	I_{TRM}	max.		10		A
Non-repetitive peak on-state current t = 10 ms; half sinewave; T_j = 110 °C prior to surge; with reapplied V_{RWMmax}	I_{TSM}	max.		10		A
I^2t for fusing (t = 10 ms)	I^2t	max.		0.5		A^2s
Rate of rise of on-state current after triggering when I_G = 200 mA to I_T = 4A; dI_G/dt = 200 mA/μs	dI_T/dt	max.		50		A/μs
Gate to cathode						
Reverse gate voltage	V_{GR}	max.		5		V
Peak gate current; t_{max} = 10 μs	I_{GM}	max.		10		A
Average power dissipation (averaged over any 20 ms period)	$P_{G(AV)}$	max.		0.12		W
Peak power dissipation	P_{GM}	max.		1.2		W
Temperatures						
Storage temperature	T_{stg}			−40 to + 125		°C
Junction temperature	T_j	max.		110		°C

THERMAL RESISTANCE

From junction to board p.c.b. mounted (see Fig. 3); temperature measured 1–3 mm from tab (see Fig. 1 for tab).	$R_{th\ j-b}$	=	30	K/W
Junction to ambient p.c.b. mounted (see Fig. 3).	$R_{th\ j-a}$	=	70	K/W

† R_{GK} = 1 kΩ.

DEVELOPMENT DATA

CHARACTERISTICS (T_j = 25 °C unless otherwise stated)

Anode to cathode

On-state voltage	V_T	typ.	1.1	V
I_T = 1.5 A	V_T	<	1.8	V
Rate of rise of off-state voltage that will not trigger any device R_{GK} = 1 kΩ; T_j = 110 °C	dV_D/dt	typ.	5	V/μs
Reverse current $V_R = V_{RWMmax}$; T_j = 110 °C	I_R	<	0.5	mA
Off-state current $V_D = V_{DWMmax}$; T_j = 110 °C	I_D	<	0.5	mA
Latching current	I_L	<	10	mA
Holding current	I_H	<	6	mA

Gate to cathode

Voltage that will trigger all devices V_D = 12 V	V_{GT}	>	1.5	V
V_D = 12 V; T_j = −40 °C	V_{GT}	>	2.3	V
Voltage that will not trigger any device V_D = 12 V; T_j = 110 °C	V_{GD}	<	250	mV
Current that will trigger all devices V_D = 12 V	I_{GT}	>	200	μA

MOUNTING INSTRUCTIONS

All dimensions in mm

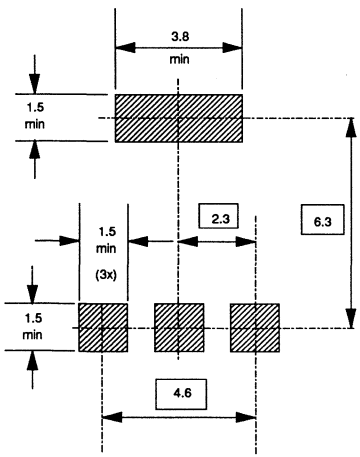

Fig. 2 soldering pattern for surface mounting SOT-223.

PRINTED CIRCUIT BOARD

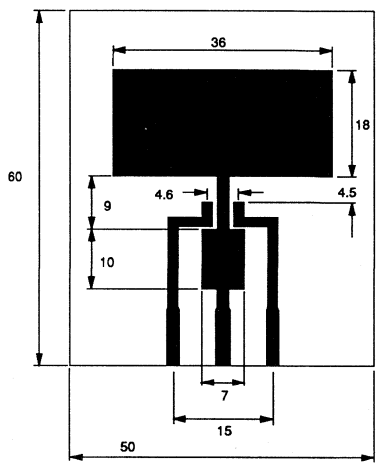

Fig. 3 PCB for thermal resistance and power rating for SOT-223.

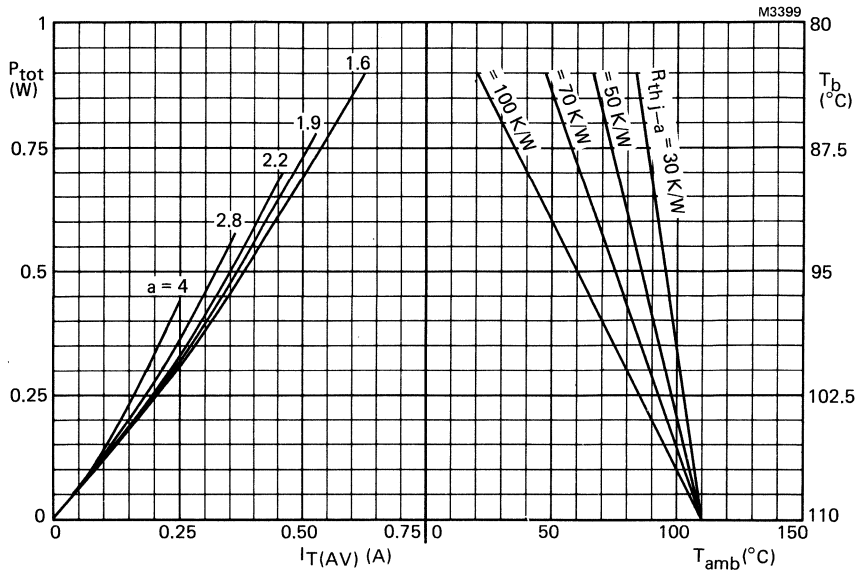

Fig. 4 The right-hand part shows the interrelationship between the power (derived from the left-hand part) and the maximum permissible temperatures for various p.c.b. mountings.

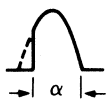

α = conduction angle per half cycle

$$a = \text{form factor} = \frac{I_{T(RMS)}}{I_{T(AV)}}$$

α	a
30°	4
60°	2.8
90°	2.2
120°	1.9
180°	1.57

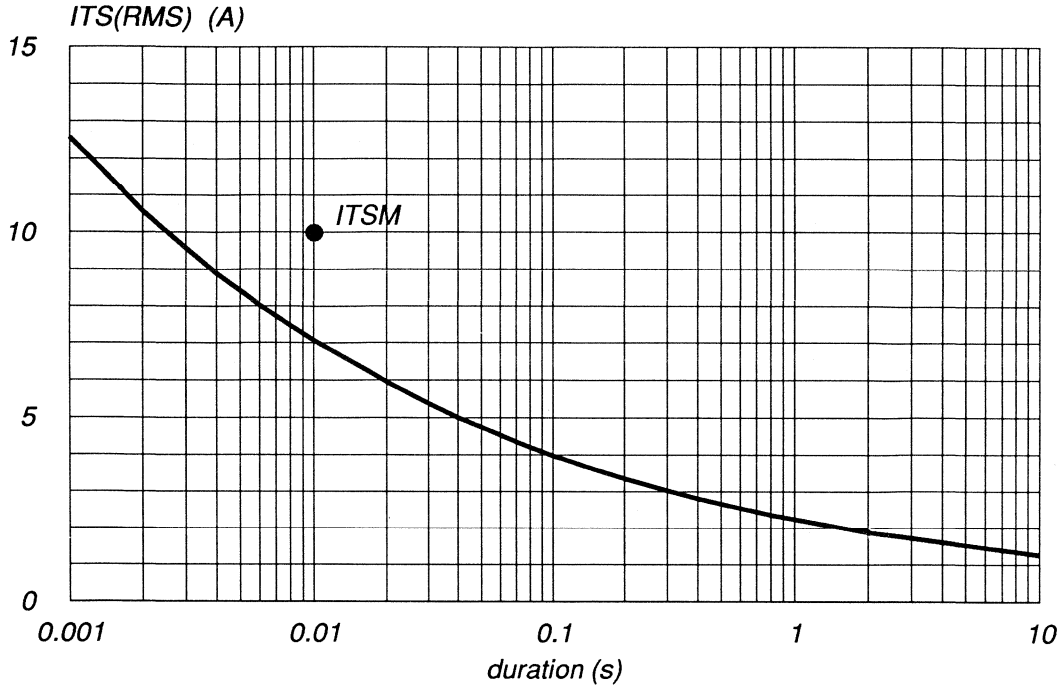

Fig. 5 Maximum permissible non-repetitive R.M.S. on-state current based on sinusoidal currents (f = 50 Hz) with reapplied V_{RWMmax}. T_j = 110 °C prior to surge.

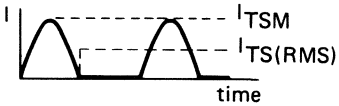

DEVELOPMENT DATA

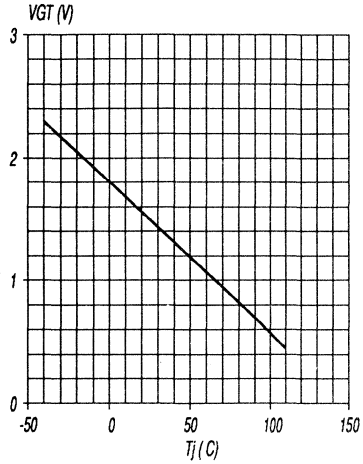

Fig. 6 Minimum gate voltage that will trigger all devices as a function of junction temperature.

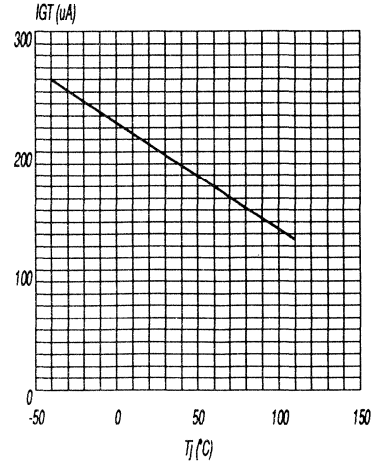

Fig. 7 Minimum gate current that will trigger all devices as a function of junction temperature.

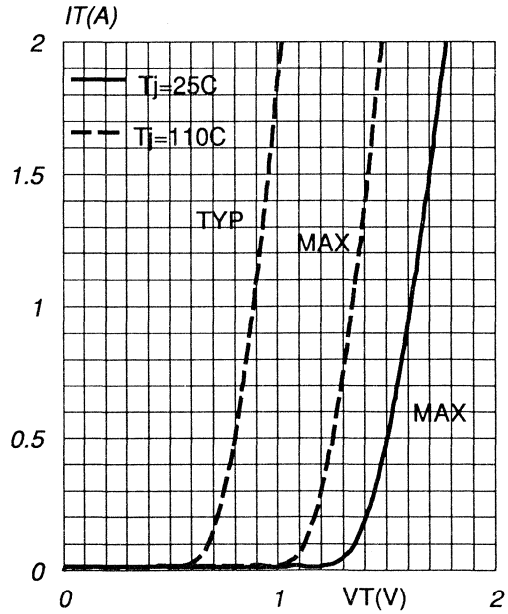

Fig. 8 On-state voltage drop.

THYRISTORS

Fully-diffused thyristors in TO–92 package, with low gate current requirement suitable for driving from IC outputs. Applications include relay and coil pulsing, control of small DC motors, small lamps, etc.

QUICK REFERENCE DATA

			BT149–B	D	E	G	
Repetitive peak voltages	V_{DRM}/V_{RRM}	max.	200	400	500	600	V
Average on-state current	$I_{T(AV)}$	max.		0.5			A
RMS on-state current	$I_{T(RMS)}$	max.		0.8			A
Non-repetitive peak on-state current	I_{TSM}	max.		8			A

MECHANICAL DATA

Dimensions in mm

Fig.1 TO–92 variant

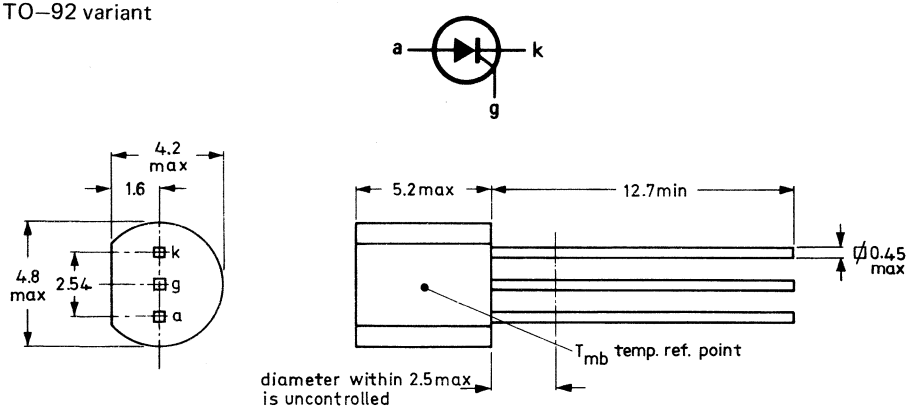

RATINGS

Limiting values in accordance with the Absolute Maximum System (IEC 134).

Anode to cathode			BT149–B	D	E	G	
Non-repetitive peak voltages ($t \leqslant 10$ ms)	V_{DSM}/V_{RSM}	max.	200	400	500	600	V
Repetitive peak voltages ($\delta \leqslant 0.01$)	V_{DRM}/V_{RRM}	max.	200	400	500	600	V
Crest-working off-state voltage	V_{DWM}/V_{RWM}	max.	200	400	400	400	V

Average on-state current (averaged over any 20 ms period up to $T_c = 55$ °C	$I_{T(AV)}$	max.	0.5	A
RMS on-state current	$I_{T(RMS)}$	max.	0.8	A
Repetitive peak on-state current	I_{TRM}	max.	8	A
Non-repetitive peak on-state current; t = 10 ms; half sinewave; $T_j = 125$ °C prior to surge; with reapplied V_{RWMmax}	I_{TSM}	max.	8	A
I^2t for fusing (t = 10 ms)	I^2t	max.	0.32	A^2s
Gate to cathode				
Peak reverse voltage	V_{RGM}	max.	5	V
Average power dissipation (averaged over any 20 ms period)	$P_{G(AV)}$	max.	0.1	W
Peak power dissipation	P_{GM}	max.	2	W
Temperatures				
Storage temperature	T_{stg}		−40 to +150	°C
Operating junction temperature	T_j	max.	125	°C

THERMAL RESISTANCE

From junction to ambient in free air	$R_{th\ j\text{-}a}$	=	150	K/W*

*Device mounted on printed circuit board, max. lead length 4 mm.

CHARACTERISTICS

Anode to cathode

On-state voltage I_T = 1 A; T_j = 25 °C	V_T	<	1.35	V*
Rate of rise of off-state voltage that will not trigger any device; exponential method; V_D = 2/3 $V_{DRM\ max}$; R_{GK} = 1 kΩ; T_j = 125 °C	dV/dt	typ.	25	V/μs
Reverse current V_R = V_{RRMmax}; R_{GK} = 1 kΩ; T_j = 125 °C	I_R	<	0.1	mA
Off-state current V_D = V_{DRMmax}; R_{GK} = 1 kΩ; T_j = 125 °C	I_D	<	0.1	mA
Latching current V_D = 12 V; R_{GK} = 1 kΩ; T_j = 25 °C	I_L	<	6	mA
Holding current V_D = 12 V; R_{GK} = 1 kΩ; T_j = 25 °C	I_H	<	5	mA

Gate to cathode

Voltage that will trigger all devices V_D = 12 V; T_j = 25 °C	V_{GT}	>	0.8	V
Current that will trigger all devices V_D = 12 V; T_j = 25 °C	I_{GT}	>	0.2	mA

*Measured under pulse conditions to avoid excessive dissipation.

THYRISTORS

Glass-passivated thyristor in TO-220AB envelope, featuring sensitive gate triggering as low as 200 μA. Particularly suitable in applications where high fatigue stresses due to thermal cycling and repeated switching are present. Typical applications include temperature and motor control, relay and coil pulsing and power supply crowbar protection circuits and regulators in transformerless power supply systems.

QUICK REFERENCE DATA

Repetitive peak voltages	V_{DRM}/V_{RRM}	max.	500	V
Average on-state current	$I_{T(AV)}$	max.	2.5	A
rms on-state current	$I_{T(RMS)}$	max.	4	A
Non-repetitive on-state current	I_{TSM}	max.	25	A

MECHANICAL DATA

Dimensions in mm

Fig.1 TO-220AB

Pinning:
1 = Cathode
2 = Anode
3 = Gate

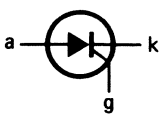

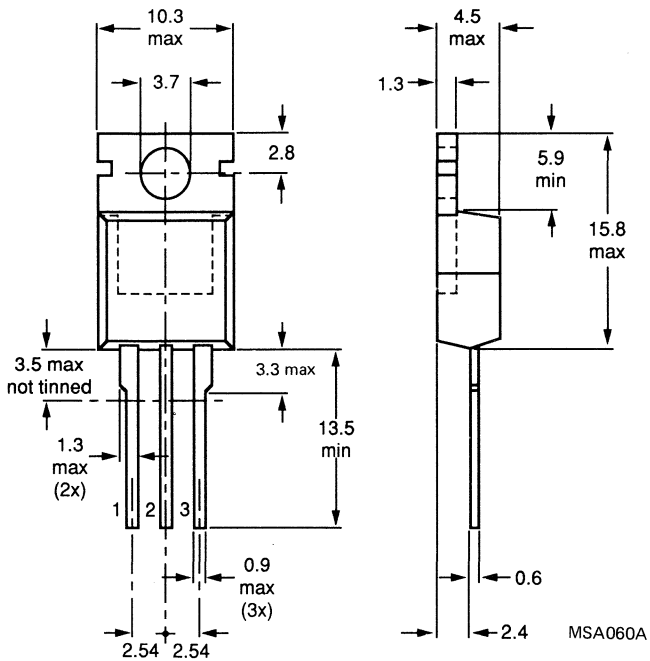

Net mass: 2 g

Note: The exposed metal mounting base is directly connected to the anode.

Accessories supplied on request, see data sheets Mounting instructions and accessories for TO-220 envelopes.

RATINGS

Limiting values in accordance with the Absolute Maximum System (IEC 134).

Anode to cathode				
Non-repetitive peak voltages ($t \leqslant 10$ ms)	V_{DSM}/V_{RSM}	max.	500	V*
Repetitive peak voltage ($\delta \leqslant 0.01$)	V_{DRM}/V_{RRM}	max.	500	V
Crest working voltages	V_{DWM}/V_{RWM}	max.	400	V
Continuous voltages	V_D/V_R	max.	400	V
Average on-state current (averaged over any 20 ms period) up to T_{mb} = 98 °C	$I_{T(AV)}$	max.	2.5	A
R.M.S. on-state current	$I_{T(RMS)}$	max.	4	A
Repetitive peak on-state current	I_{TRM}	max.	25	A
Non-repetitive peak on-state current t = 10 ms; half sine-wave; T_j = 110 °C prior to surge; with reapplied V_{RWMmax}	I_{TSM}	max.	25	A
I^2t for fusing (t = 10 ms)	I^2t	max.	3	A^2s
Rate of rise of on-state current after triggering with I_G = 50 mA; to I_T = 10 A; dI_G/dt = 50 mA/μs	dI_T/dt	max.	50	A/μs
Gate to cathode				
Average power dissipation (averaged over any 20 ms period)	$P_{G(AV)}$	max.	0.5	W
Peak power dissipation	P_{GM}	max.	5	W
Temperatures				
Storage temperature	T_{stg}		−40 to +125	°C
Junction temperature	T_j	max.	110	°C

*Although not recommended, higher off-state voltages may be applied without damage, but the thyristor may switch into the on-state. The rate of rise of on-state current should not exceed 15 A/μs.

THERMAL RESISTANCE

From junction to mounting base	$R_{th\ j\text{-}mb}$	=	2.5	K/W
Transient thermal impedance; t = 1 ms	$Z_{th\ j\text{-}mb}$	=	0.2	K/W

Influence of mounting method

1. Heatsink mounted with clip (see mounting instructions)

Thermal resistance from mounting base to heatsink

a. with heatsink compound	$R_{th\ mb\text{-}h}$	=	0.3	K/W
b. with heatsink compound and 0.06 mm maximum mica insulator	$R_{th\ mb\text{-}h}$	=	1.4	K/W
c. with heatsink compound and 0.1 mm maximum mica insulator (56369)	$R_{th\ mb\text{-}h}$	=	2.2	K/W
d. with heatsink compound and 0.25 mm maximum alumina insulator (56367)	$R_{th\ mb\text{-}h}$	=	0.8	K/W
e. without heatsink compound	$R_{th\ mb\text{-}h}$	=	1.4	K/W

2. Free air operation

The quoted values of $R_{th\ j\text{-}a}$ should be used only when no leads of other dissipating components run to the same tie-point.

Thermal resistance from junction to ambient in free air; mounted on a printed-circuit board at a = any lead length	$R_{th\ j\text{-}a}$	=	60	K/W

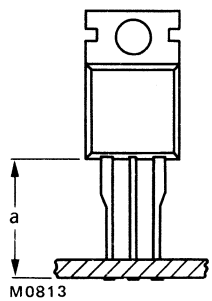

Fig.2

CHARACTERISTICS (T_j = 25 °C unless otherwise stated)

Anode to cathode

On-state voltage I_T = 5 A	V_T	<	1.8	V*
Rate of rise of off-state voltage that will not trigger any device R_{GK} = 100 Ω; T_j = 110 °C	dV_D/dt	typ.	5	V/μs
Reverse current $V_R = V_{RWMmax}$; T_j = 110 °C	I_R	<	0.5	mA
Off-state current $V_D = V_{DWMmax}$; T_j = 110 °C	I_D	<	0.5	mA
Latching curent	I_L	<	10	mA
Holding current	I_H	<	6	mA

Gate to cathode

Voltage that will trigger all devices V_D = 12 V	V_{GT}	>	1.5	V
V_D = 12 V; T_j = −40 °C	V_{GT}	>	2.3	V
Voltage that will not trigger any device V_D = 12 V; T_j = 110 °C	V_{GD}	<	250	mV
Current that will trigger all devices V_D = 12 V	I_{GT}	>	200	μA
V_D = 12 V; T_j = −40 °C	I_{GT}	>	260	μA

Switching characteristics

Gate-controlled turn-on time ($t_{gt} = t_d + t_r$) with switched from $V_D = V_{DWMmax}$ to I_T = 10 A; I_{GT} = 5 mA; dI_G/dt = 0.2 A/μs	t_{gt}	typ.	2	μs

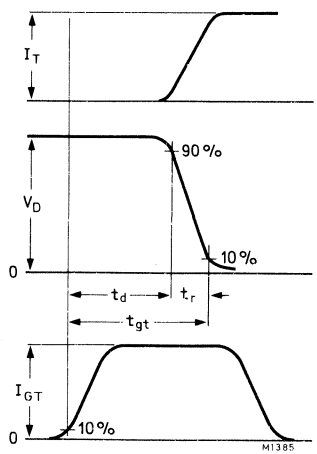

Fig.3 Gate-controlled turn-on time definition.

*Measured under pulse conditions to avoid excessive dissipation.

MOUNTING INSTRUCTIONS

1. The device may be soldered directly into the circuit, but the maximum permissible temperature of the soldering iron or bath is 275 °C; it must not be in contact with the joint for more than 5 seconds. Soldered joints must be at least 4.7 mm from the seal.
2. The leads should not be bent less than 2.4 mm from the seal, and should be supported during bending. The leads can be bent, twisted or straightened by 90° maximum. The minimum bending radius is 1 mm.
3. It is recommended that the circuit connection be made to the anode tag, rather than direct to the heatsink.
4. Mounting by means of a spring clip is the best mounting method because it offers:
   a. a good thermal contact under the crystal area and slightly lower $R_{th\ mb\text{-}h}$ values than screw mounting.
   b. safe isolation for mains operation.
   However, if a screw is used, it should be M3 cross-recess pan-head. Care should be taken to avoid damage to the plastic body.
5. For good thermal contact, heatsink compound should be used between mounting base and heatsink. Values of $R_{th\ mb\text{-}h}$ given for mounting with heatsink compound refer to the use of a metallic oxide-loaded compound. Ordinary silicone grease is not recommended.
6. Rivet mounting (only possible for non-insulated mounting).

   Devices may be rivetted to flat heatsinks; such a process **must neither** deform the mounting tab, **nor** enlarge the mounting hole.
7. The heatsink must have a flatness in the mounting area of 0.02 mm maximum per 10 mm. Mounting holes must be deburred.

OPERATING NOTES

Dissipation and heatsink considerations:

a. The various components of junction temperature rise above ambient are illustrated in Fig.4.

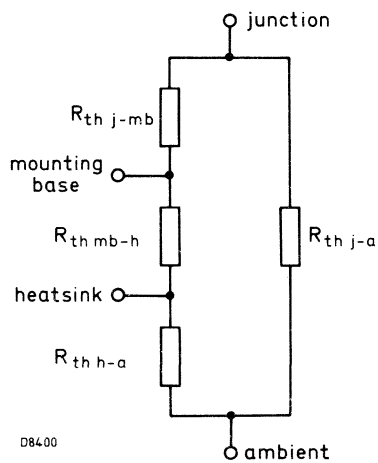

Fig.4

b. The method of using Fig.5 is as follows:
Starting with the required current on the $I_{T(AV)}$ axis, trace upwards to meet the appropriate form factor curve. Trace right horizontally and upwards from the appropriate value on the T_{amb} scale. The intersection determines the $R_{th\ mb\text{-}a}$. The heatsink thermal resistance value ($R_{th\ h\text{-}a}$) can now be calculated from:

$$R_{th\ h\text{-}a} = R_{th\ mb\text{-}a} - R_{th\ mb\text{-}h}.$$

c. Any measurement of heatsink temperature should be made immediately adjacent to the device.

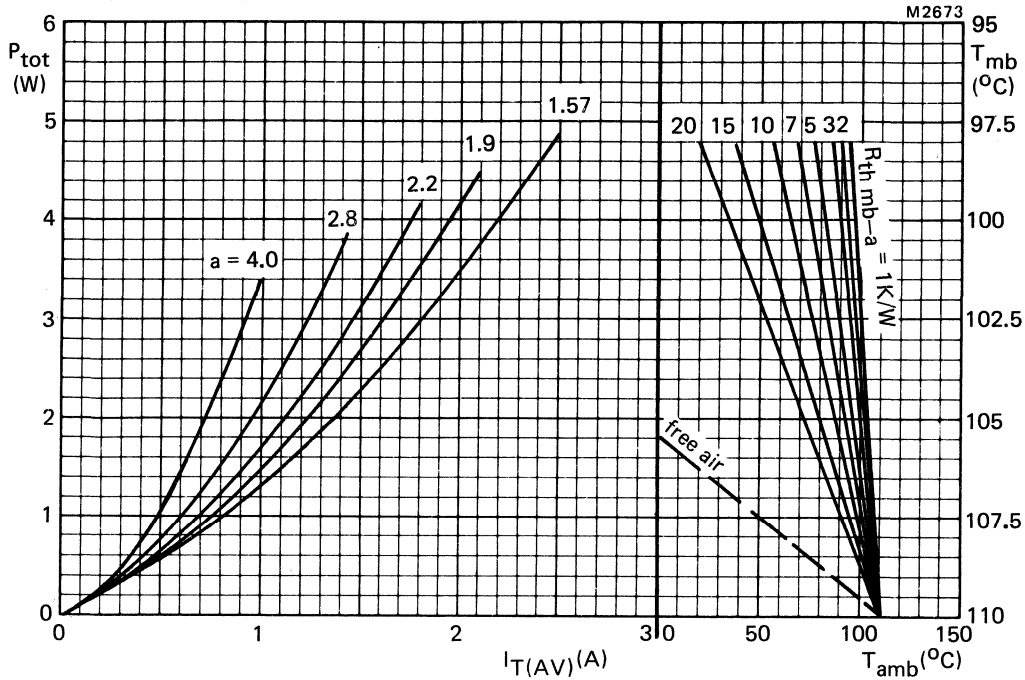

Fig.5 The right-hand part shows the interrelationship between the power (derived from the left-hand part) and the maximum permissible temperatures.

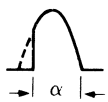

α = conduction angle per half cycle

$$a = \text{form factor} = \frac{I_{T(RMS)}}{I_{T(AV)}}$$

α	a
30°	4
60°	2.8
90°	2.2
120°	1.9
180°	1.57

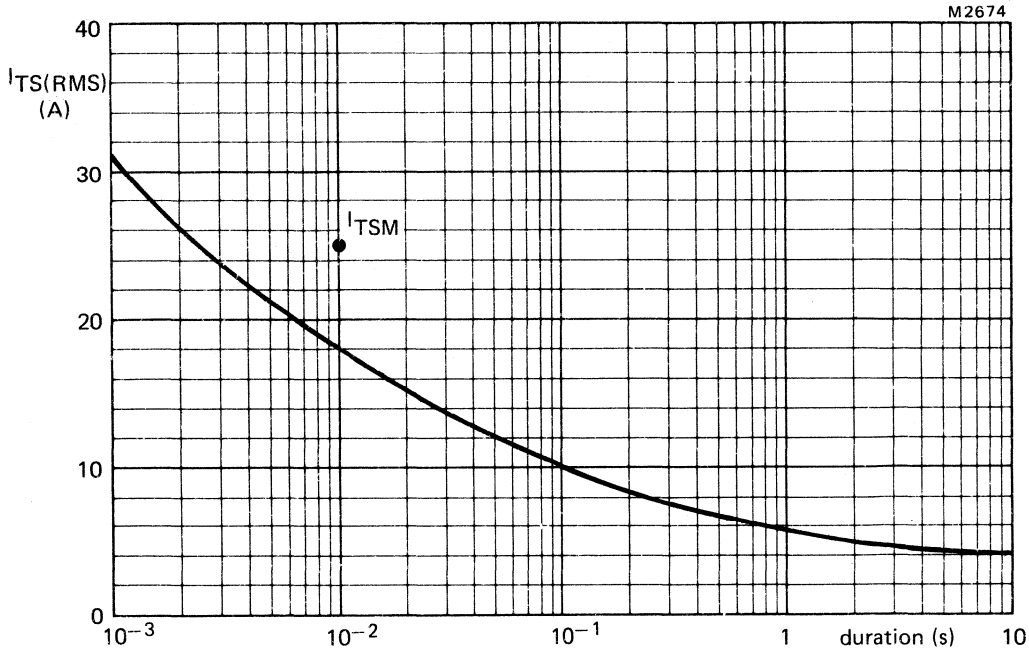

Fig.6 Maximum permissible non-repetitive r.m.s. on-state current based on sinusoidal currents (f = 50 Hz) with reapplied V_{RWMmax}. T_j = 110 °C prior to surge.

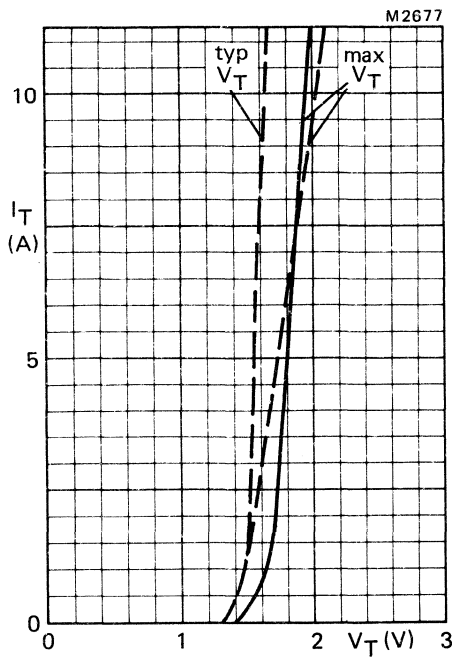

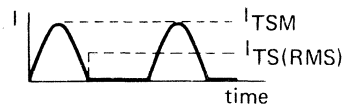

Fig.7 —— T_j = 25 °C; – – – T_j = 110 °C.

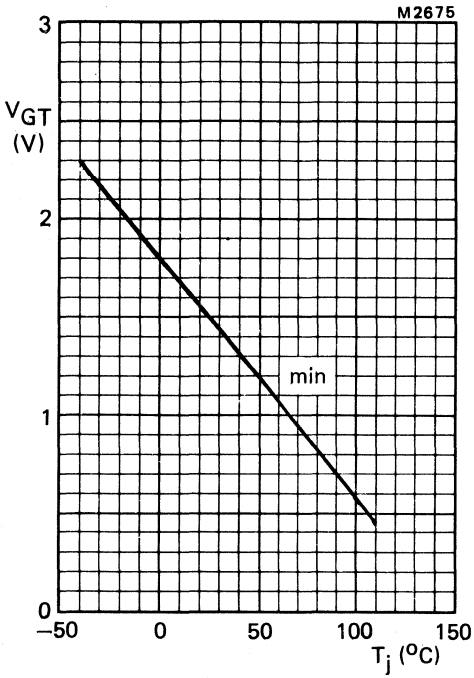

Fig.8 Minimum gate voltage that will trigger all devices as a function of junction temperature.

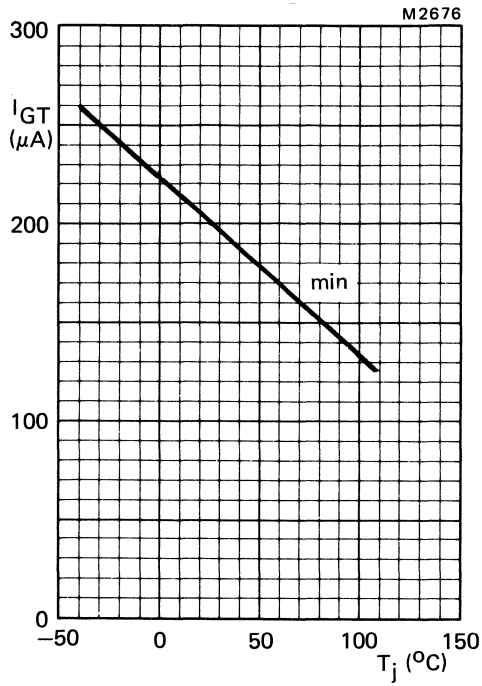

Fig.9 Minimum gate current that will trigger all devices as a function of junction temperature.

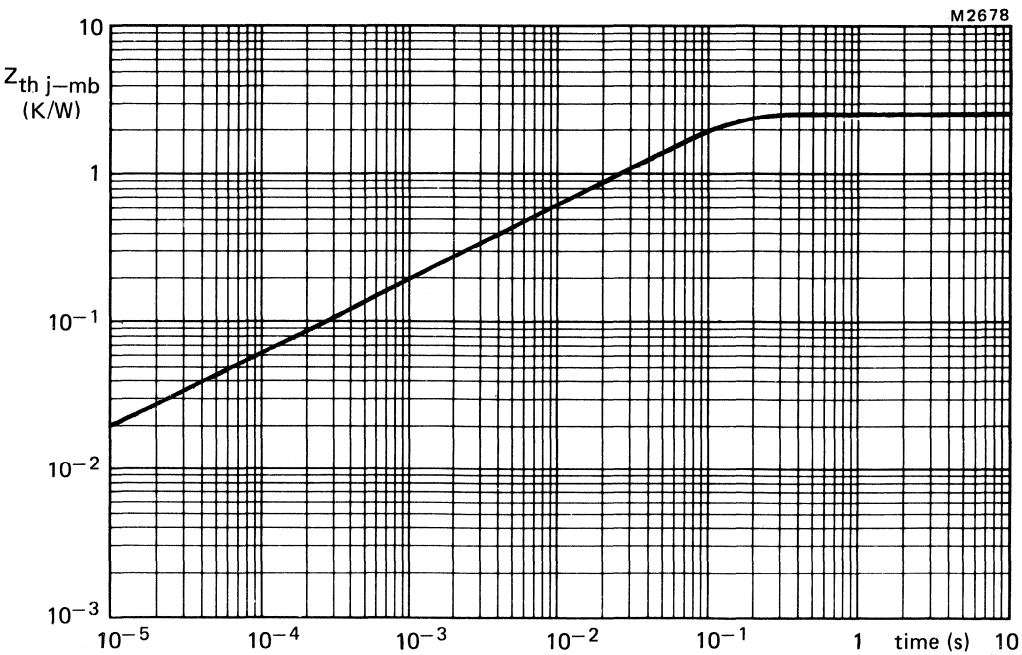

Fig.10 Transient thermal impedance.

THYRISTORS

Glass-passivated thyristors in TO-220AB envelopes, which are particularly suitable in situations creating high fatigue stresses involved in thermal cycling and repeated switching. Applications include temperature control, motor control, regulators in transformerless power supply applications, relay and coil pulsing and power supply crowbar protection circuits.

QUICK REFERENCE DATA

			BT151-500R	650R	800R	
Repetitive peak voltages	V_{DRM}/V_{RRM}	max.	500	650	800	V
Average on-state current	$I_{T(AV)}$	max.		7.5		A
R.M.S. on-state current	$I_{T(RMS)}$	max.		12		A
Non-repetitive peak on-state current	I_{TSM}	max.		100		A

MECHANICAL DATA

Fig.1 TO-220AB.

Dimensions in mm

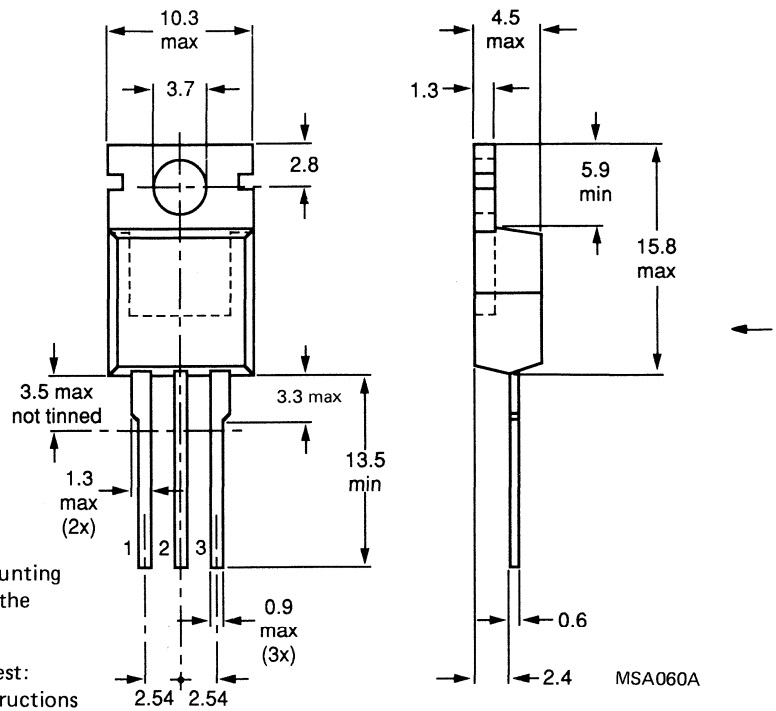

Pinning:

1 = Cathode

2 = Anode

3 = Gate

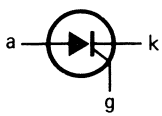

Net mass: 2 g

Note: The exposed metal mounting base is directly connected to the anode.

Accessories supplied on request: see data sheets Mounting instructions and accessories for TO-220 envelopes.

Products approved to CECC 50 011--003 available on request.

RATINGS

Limiting values in accordance with the Absolute Maximum System (IEC 134)

Anode to cathode			BT151-500R	650R	800R	
Non-repetitive peak voltages ($t \leqslant 10$ ms)	V_{DSM}/V_{RSM}	max.	500	650	800	V*
Repetitive peak voltages ($\delta \leqslant 0.01$)	V_{DRM}/V_{RRM}	max.	500	650	800	V
Crest working voltages	V_{DWM}/V_{RWM}	max.	400	400	400	V
Continuous voltages	V_D/V_R	max.	400	400	400	V
Average on-state current (averaged over any 20 ms period) up to T_{mb} = 95 °C	$I_{T(AV)}$	max.		7.5		A
R.M.S. on-state current	$I_{T(RMS)}$	max.		12		A
Repetitive peak on-state current	I_{TRM}	max.		65		A
Non-repetitive peak on-state current; t = 10 ms; half sine-wave; T_j = 110 °C prior to surge; with reapplied V_{RWMmax}	I_{TSM}	max.		100		A
I^2t for fusing (t = 10 ms)	I^2t	max.		50		A^2s
Rate of rise of on-state current after triggering with I_G = 50 mA to I_T = 20 A; dI_G/dt = 50 mA/μs	dI_T/dt	max.		50		A/μs
Gate to cathode						
Reverse peak voltage	V_{RGM}	max.		5		V
Average power dissipation (averaged over any 20 ms period)	$P_{G(AV)}$	max.		0.5		W
Peak power dissipation	P_{GM}	max.		5		W
Temperatures						
Storage temperature	T_{stg}			−40 to +125		°C
Operating junction temperature	T_j	max.		110		°C

*Although not recommended, higher off-state voltages may be applied without damage, but the thyristor may switch into the on-state. The rate of rise of on-state current should not exceed 15 A/μs.

THERMAL RESISTANCE

From junction to mounting base	$R_{th\ j\text{-}mb}$	=	1.3	K/W
Transient thermal impedance; t = 1 ms	$Z_{th\ j\text{-}mb}$	=	0.2	K/W

Influence of mounting method

1. Heatsink mounted with clip (see mounting instructions)

Thermal resistance from mounting base to heatsink

a. with heatsink compound	$R_{th\ mb\text{-}h}$	=	0.3	K/W
b. with heatsink compound and 0.06 mm maximum mica insulator	$R_{th\ mb\text{-}h}$	=	1.4	K/W
c. with heatsink compound and 0.1 mm maximum mica insulator (56369)	$R_{th\ mb\text{-}h}$	=	2.2	K/W
d. with heatsink compound and 0.25 mm max. alumina insulator (56367)	$R_{th\ mb\text{-}h}$	=	0.8	K/W
e. without heatsink compound	$R_{th\ mb\text{-}h}$	=	1.4	K/W

2. Free-air operation

The quoted values of $R_{th\ j\text{-}a}$ should be used only when no leads of other dissipating components run to the same tie-point.

Thermal resistance from junction to ambient in free air: mounted on a printed-circuit board at any lead length and with copper laminate	$R_{th\ j\text{-}a}$	=	60	K/W

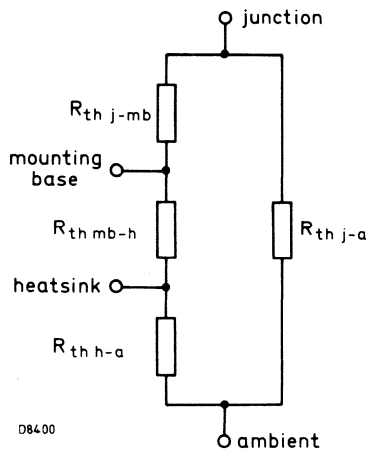

Fig.2 Components of thermal resistance.

CHARACTERISTICS

Anode to cathode

On-state voltage				
I_T = 23 A; T_j = 25 °C	V_T	<	1,75	V*
Rate of rise of off-state voltage that will not trigger any device; T_j = 110 °C; see Fig.10				
R_{GK} = open circuit	dV_D/dt	<	50	V/μs
R_{GK} = 100 Ω	dV_D/dt	<	200	V/μs
Reverse current				
$V_R = V_{RWMmax}$; T_j = 110 °C	I_R	<	0,5	mA
Off-state current				
$V_D = V_{DWMmax}$; T_j = 110 °C	I_D	<	0,5	mA
Latching current; T_j = 25 °C	I_L	<	40	mA
Holding current; T_j = 25 °C	I_H	<	20	mA

Gate to cathode

Voltage that will trigger all devices				
→ V_D = 12 V; T_j = 25 °C	V_{GT}	>	1,5	V
→ V_D = 12 V; T_j = −40 °C	V_{GT}	>	2,3	V
Voltage that will not trigger any device				
$V_D = V_{DRMmax}$; T_j = 110 °C	V_{GD}	<	250	mV
Current that will trigger all devices				
→ V_D = 12 V; T_j = 25 °C	I_{GT}	>	15	mA
→ V_D = 12 V; T_j = −40 °C	I_{GT}	>	20	mA

Switching characteristics

Gate-controlled turn-on time ($t_{gt} = t_d + t_r$) when switched from $V_D = V_{DRMmax}$ to I_T = 40 A; I_{GT} = 100 mA; dI_G/dt = 5A/μs; T_j = 25 °C	t_{gt}	typ.	2	μs

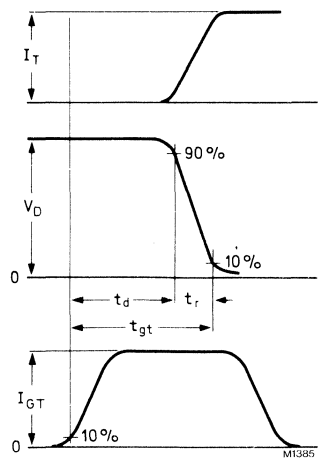

Fig.3 Gate controlled turn-on time definition.

*Measured under pulse conditions to avoid excessive dissipation.

MOUNTING INSTRUCTIONS

1. The device may be soldered directly into the circuit, but the maximum permissible temperature of the soldering iron or bath is 275 °C; it must not be in contact with the joint for more than 5 seconds. Soldered joints must be at least 4.7 mm from the seal.
2. The leads should not be bent less than 2.4 mm from the seal, and should be supported during bending. The leads can be bent, twisted or straightened by 90° maximum. The minimum bending radius is 1 mm.
3. It is recommended that the circuit connection be made to the anode tag, rather than direct to the heatsink.
4. Mounting by means of a spring clip is the best mounting method because it offers:
   a. a good thermal contact under the crystal area and slightly lower $R_{th\ mb\text{-}h}$ values than screw mounting.
   b. safe isolation for mains operation.
   However, if a screw is used, it should be M3 cross-recess pan-head. Care should be taken to avoid damage to the plastic body.
5. For good thermal contact, heatsink compound should be used between mounting base and heatsink. Values of $R_{th\ mb\text{-}h}$ given for mounting with heatsink compound refer to the use of a metallic-oxide loaded compound. Ordinary silicone grease is not recommended.
6. Rivet mounting (only possible for non-insulated mounting)

   Devices may be rivetted to flat heatsink; such a process must neither deform the mounting tab, nor enlarge the mounting hole. The maximum recommended hole size for rivet mounting is 3.5 mm. ← The pre-formed head of the rivet should be on the device side and any rivet tool used should not damage the plastic body of the device.
7. The heatsink must have a flatness in the mounting area of 0.02 mm maximum per 10 mm. Mounting holes must be deburred.

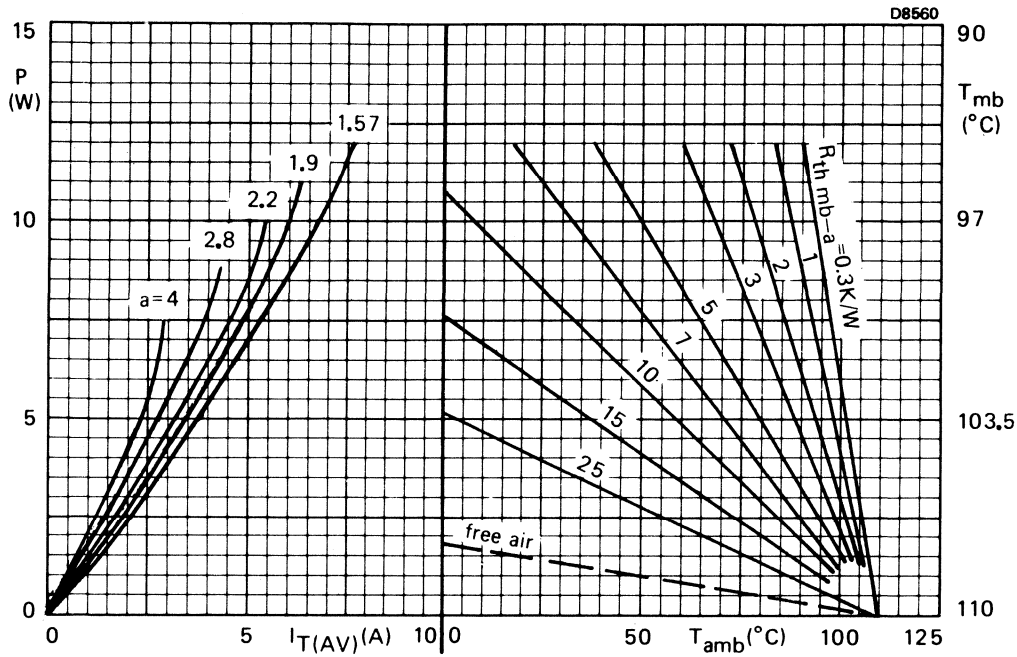

Fig.4 The right-hand part shows the interrelationship between the power (derived from the left-hand part) and the maximum permissible temperatures.

α	a
30°	4
60°	2,8
90°	2,2
120°	1,9
180°	1,57

α = conduction angle per half cycle

$$a = \text{form factor} = \frac{I_{T(RMS)}}{I_{T(AV)}}$$

→ OPERATING NOTES

Dissipation and heatsink considerations:

a. The method of using Fig.4 is as follows:
Starting with the required current on the $I_{T(AV)}$ or $I_{T(RMS)}$ axis, trace upwards to meet the appropriate form factor or conduction angle curve. Trace horizontally and upwards from the appropriate value on the T_{amb} scale. The intersection determines the $R_{th\ mb\text{-}a}$. The heatsink thermal resistance value ($R_{th\ h\text{-}a}$) can now be calculated from:

$R_{th\ h\text{-}a} = R_{th\ mb\text{-}a} - R_{th\ mb\text{-}h}$.

b. Any measurement of heatsink temperature should be made immediately adjacent to the device.

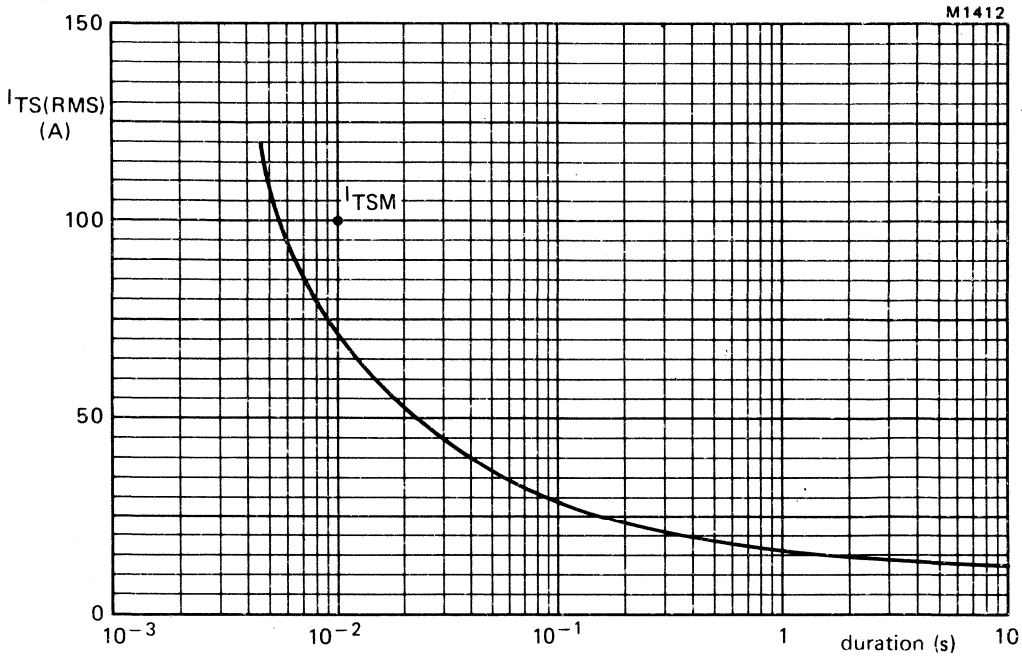

Fig.5 Maximum permissible non-repetitive r.m.s. on-state current based on sinusoidal currents (f = 50 Hz); T_j = 110 °C prior to surge; with reapplied V_{RWMmax}.

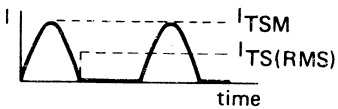

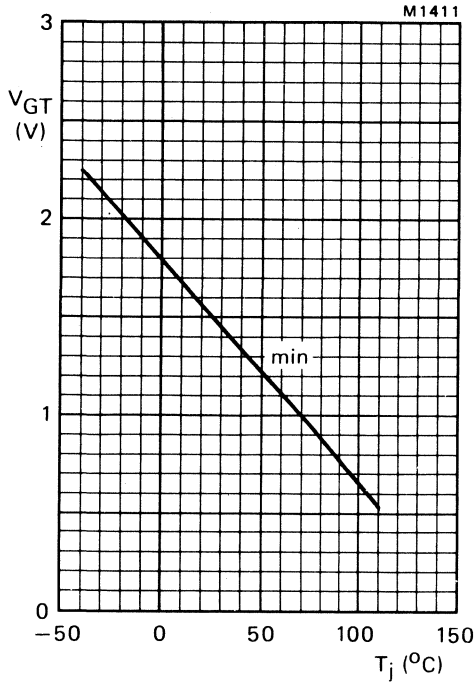

Fig.6 Minimum gate voltage that will trigger all devices as a function of junction temperature.

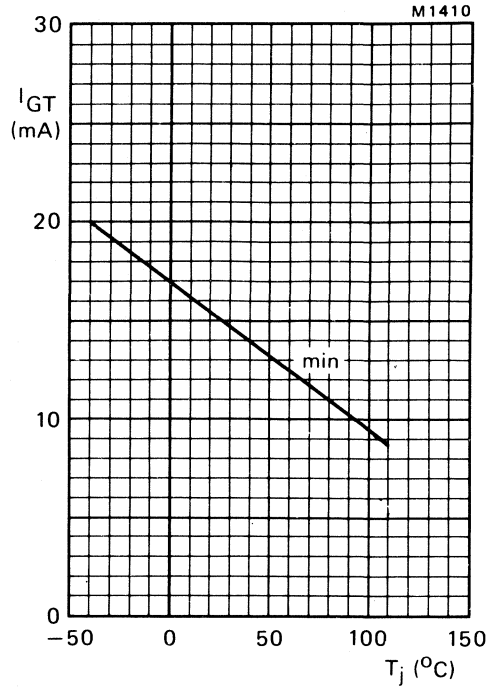

Fig.7 Minimum gate current that will trigger all devices as a function of junction temperature.

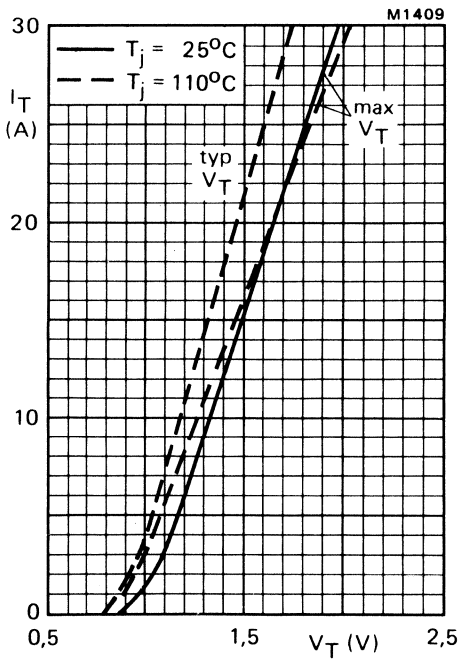

Fig.8 On-state voltage drop versus on-state current.

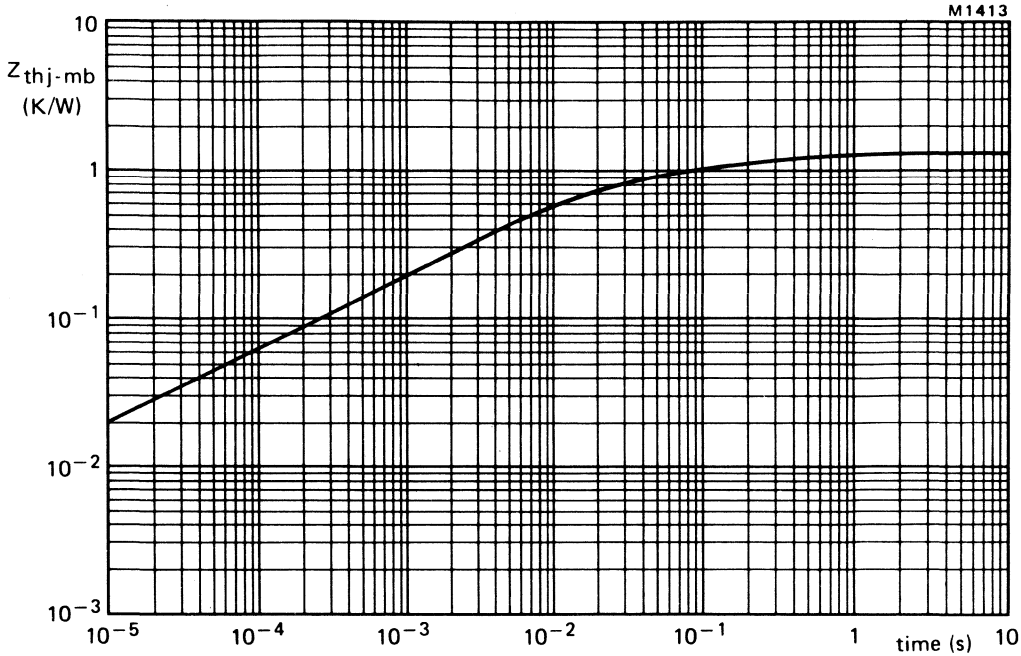

Fig.9 Thermal impedance as a function of dissipation time.

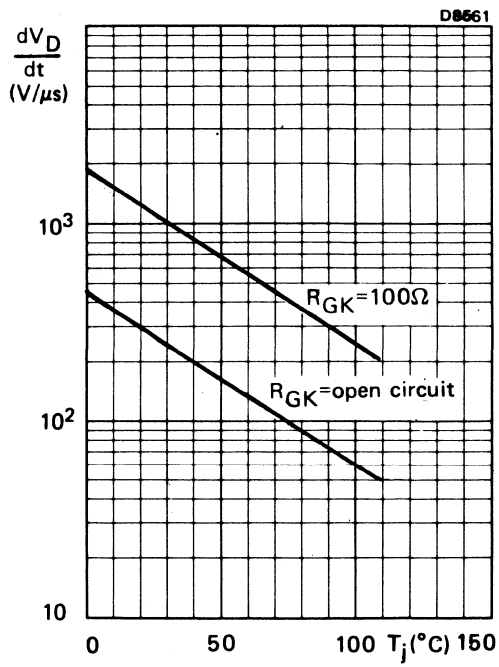

Fig.10 Maximum rate of rise of off-state voltage that will not trigger any device (exponential method) as a function of junction temperature.

FULL-PACK THYRISTORS

Glass-passivated thyristors in SOT-186 envelopes, incorporating electrical isolation between the mounting base and all three terminals. Applications include temperature control, motor control, regulators in transformerless power supply applications, relay and coil pulsing and power supply crowbar protection circuits.

QUICK REFERENCE DATA

			BT151F-500	650	800	
Repetitive peak voltages	V_{DRM}/V_{RRM}	max.	500	650	800	V
Average on-state current	$I_{T(AV)}$	max.		5.7		A
R.M.S. on-state current	$I_{T(RMS)}$	max.		9		A
Non-repetitive peak on-state current	I_{TSM}	max.		100		A

MECHANICAL DATA

Dimensions in mm

Fig.1 SOT-186

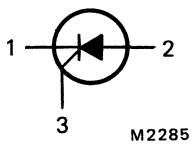

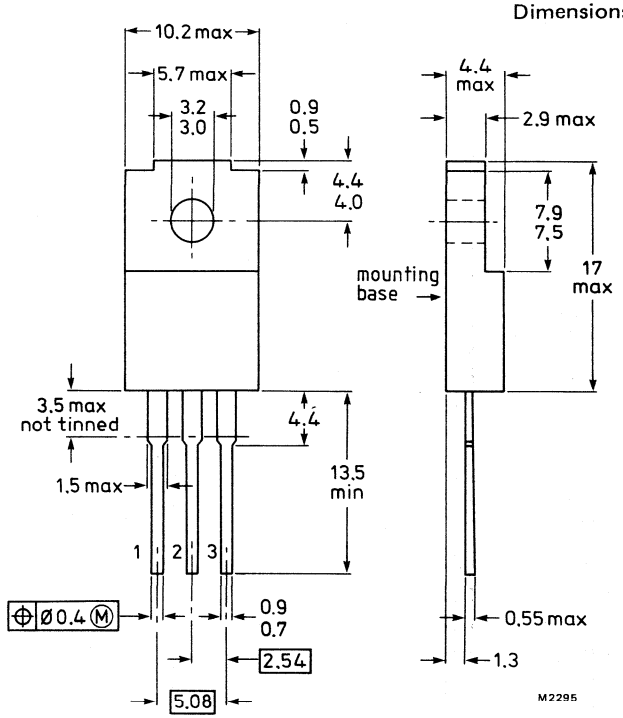

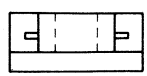

top view

Net mass: 2 g.

The mounting base is electrically isolated from all terminals.

Accessories supplied on request (see data sheets Mounting instructions for F-pack devices and Accessories for SOT-186 envelopes).

RATINGS

Limiting values in accordance with the Absolute Maximum System (IEC 134)

Anode to cathode			BT151F-500	650	800	
Non-repetitive peak voltages ($t \leqslant 10$ ms)	V_{DSM}/V_{RSM}	max.	500	650	800	V*
Repetitive peak voltages ($\delta \leqslant 0.01$)	V_{DRM}/V_{RRM}	max.	500	650	800	V
Crest working voltages	V_{DWM}/V_{RWM}	max.	400	400	400	V
Continuous voltages	V_D/V_R	max.	400	400	400	V
Average on-state current (averaged over any 20 ms period) up to T_h = 74 °C	$I_{T(AV)}$	max.		5.7		A
R.M.S. on-state current	$I_{T(RMS)}$	max.		9		A
Repetitive peak on-state current	I_{TRM}	max.		65		A
Non-repetitive peak on-state current t = 10 ms; half-sinewave; T_j = 110 °C prior to surge; with reapplied V_{RWMmax}	I_{TSM}	max.		100		A
I^2t for fusing (t = 10 ms)	I^2t	max.		50		A^2s
Rate of rise of on-state current after triggering with I_G = 50 mA to I_T = 20 A; dI_G/dt = 50 mA/μs	dI_T/dt	max.		50		A/μs
Gate to cathode						
Reverse peak voltage	V_{RGM}	max.		5		V
Average power dissipation (averaged over any 20 ms period)	$P_{G(AV)}$	max.		0.5		W
Peak power dissipation	P_{GM}	max.		5		W
Temperatures						
Storage temperature	T_{stg}			−40 to +125		°C
Operating junction temperature	T_j	max.		110		°C

ISOLATION

From all three terminals to external heatsink (peak)**	$V_{(isol)M}$	max.	1500	V
Capacitance from anode to external heatsink	$C_{(isol)}$	typ.	12	pF

*Although not recommended, higher off-state voltages may be applied without damage, but the thyristor may switch into the on-state. The rate of rise of on-state current should not exceed 15 A/μs.

**Measured with relative humidity < 65% under clean and dust-free conditions.

THERMAL RESISTANCE

1. Heatsink-mounted with clip (see mounting instructions)

   Thermal resistance from junction to external heatsink

With heatsink compound	$R_{th\ j\text{-}h}$	=	4.5	K/W
Without heatsink compound	$R_{th\ j\text{-}h}$	=	6.5	K/W

2. Free-air operation

   The quoted values of $R_{th\ j\text{-}a}$ should be used only when no leads of other dissipating components run to the same tie-point.

   Thermal resistance from junction to ambient in free air; mounted on a printed-circuit board at any lead length and with copper laminate $R_{th\ j\text{-}a}$ = 55 K/W

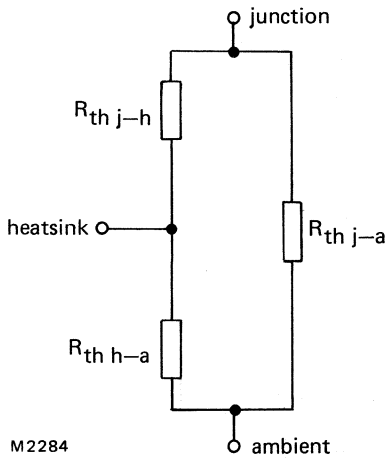

Fig.2 Components of thermal resistance.

CHARACTERISTICS

Anode to cathode

On-state voltage				
I_T = 23 A; T_j = 25 °C	V_T	<	1.75	V*
Rate of rise of off-state voltage that will not trigger any device; T_j = 110 °C; see Fig.10				
R_{GK} = open circuit	dV_D/dt	<	50	V/µs
R_{GK} = 100 Ω	dV_D/dt	<	200	V/µs
Reverse current				
$V_R = V_{RWMmax}$; T_j = 110 °C	I_R	<	0.5	mA
Off-state current				
$V_D = V_{DWMmax}$; T_j = 110 °C	I_D	<	0.5	mA
Latching current; T_j = 25 °C	I_L	<	40	mA
Holding current; T_j = 25 °C	I_H	<	20	mA

Gate to cathode

Voltage that will trigger all devices				
→ V_D = 12 V; T_j = 25 °C	V_{GT}	>	1.5	V
→ V_D = 12 V; T_j = −40 °C	V_{GT}	>	2.3	V
Voltage that will not trigger any device				
$V_D = V_{DRMmax}$; T_j = 110 °C	V_{GD}	<	250	mV
Current that will trigger all devices				
→ V_D = 12 V; T_j = 25 °C	I_{GT}	>	15	mA
→ V_D = 12 V; T_j = −40 °C	I_{GT}	>	20	mA

Switching characteristics

Gate-controlled turn-on time ($t_{gt} = t_d + t_r$) when switched from $V_D = V_{DRMmax}$ to I_T = 40 A; I_{GT} = 100 mA; dI_G/dt = 5 A/µs; T_j = 25 °C	t_{gt}	typ.	2	µs

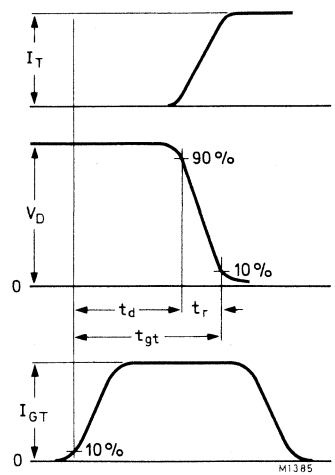

Fig.3 Gate controlled turn-on time definition.

*Measured under pulse conditions to avoid excessive dissipation.

MOUNTING INSTRUCTIONS

1. The device may be soldered directly into the circuit, but the maximum permissible temperature of the soldering iron or bath is 275 °C; it must not be in contact with the joint for more than 5 seconds. Soldered joints must be at least 4.7 mm from the seal.
2. The leads should not be bent less than 2.4 mm from the seal, and should be supported during bending. The leads can be bent, twisted or straightened by 90° maximum. The minimum bending radius is 1 mm.
3. Mounting by means of a spring clip is the best mounting method because it offers good thermal contact under the crystal area and slightly lower $R_{th\ j\text{-}h}$ values than screw mounting. However, if a screw is used, it should be M3 cross-recess pan-head. Care should be taken to avoid damage to the plastic body.
4. For good thermal contact heatsink compound should be used between mounting base and heatsink. Values of $R_{th\ j\text{-}h}$ given for mounting with heatsink compound refer to the use of a metallic-oxide loaded compound. Ordinary silicone grease is not recommended.
5. Rivet mounting is not recommended.
6. The heatsink must have a flatness in the mounting area of 0.02 mm maximum per 10 mm. Mounting holes must be deburred.

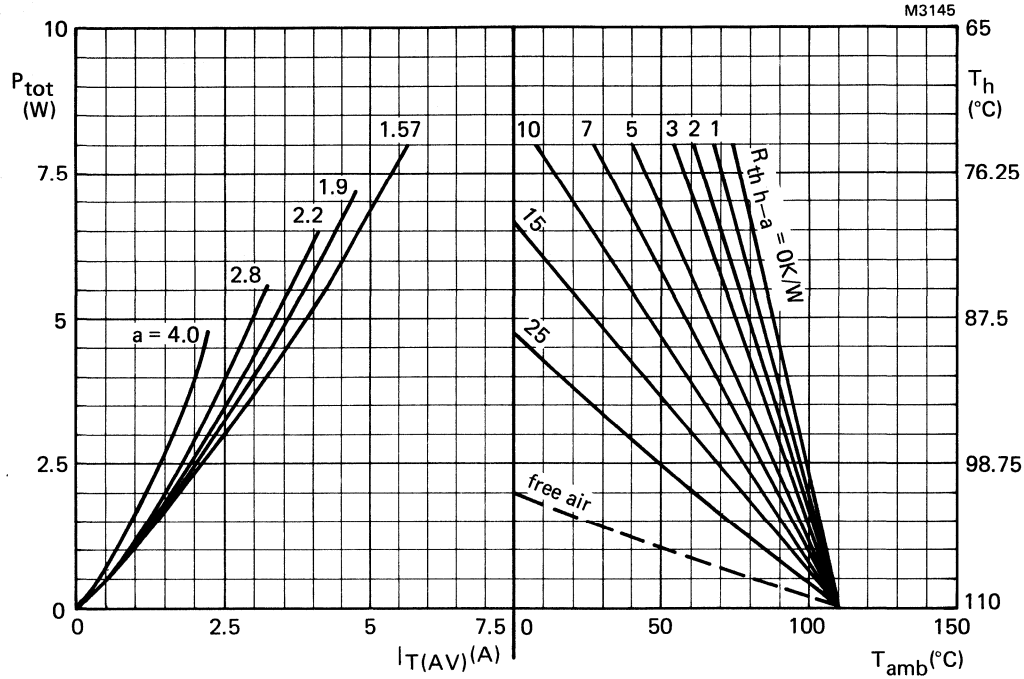

Fig.4 The right-hand part shows the interrelationship between the power (derived from the left-hand part) and the maximum permissible temperature. With heatsink compound.

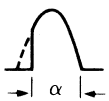

α	a
30°	4
60°	2.8
90°	2.2
120°	1.9
180°	1.57

α = conduction angle per half cycle

$$a = \text{form factor} = \frac{I_{T(RMS)}}{I_{T(AV)}}$$

OPERATING NOTES

Dissipation and heatsink considerations:

a. The method of using Figs.4 and 5 is as follows:

Starting with the required current on the $I_{T(AV)}$ axis, trace upwards to meet the appropriate form factor or conduction angle curve. Trace horizontally and upwards from the appropriate value on the T_{amb} scale. The intersection determines the $R_{th\ mb-a}$. The heatsink thermal resistance value ($R_{th\ h-a}$) can now be calculated from:

$$R_{th\ h-a} = R_{th\ mb-a} - R_{th\ mb-h}.$$

b. Any measurement of heatsink temperature should be made immediately adjacent to the device.

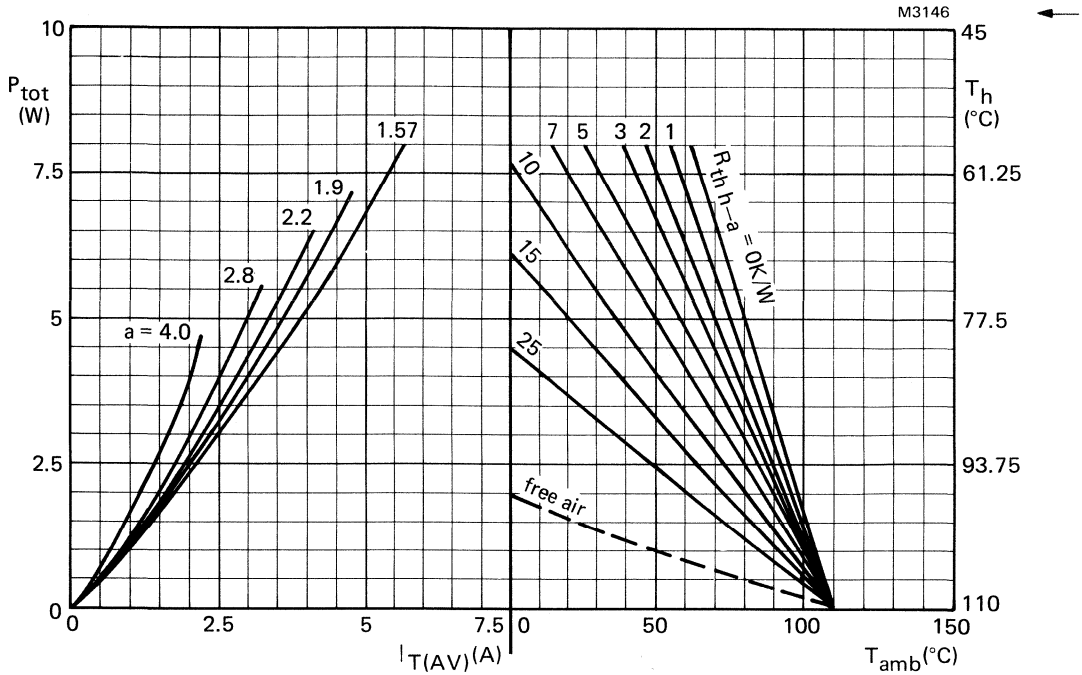

Fig. 5 The right-hand part shows the interrelationship between the power (derived from the left-hand part) and the maximum permissible temperatures. Without heatsink compound.

α	a
30°	4
60°	2.8
90°	2.2
120°	1.9
180°	1.57

α = conduction angle per half cycle

$$a = \text{form factor} = \frac{I_{T(RMS)}}{I_{T(AV)}}$$

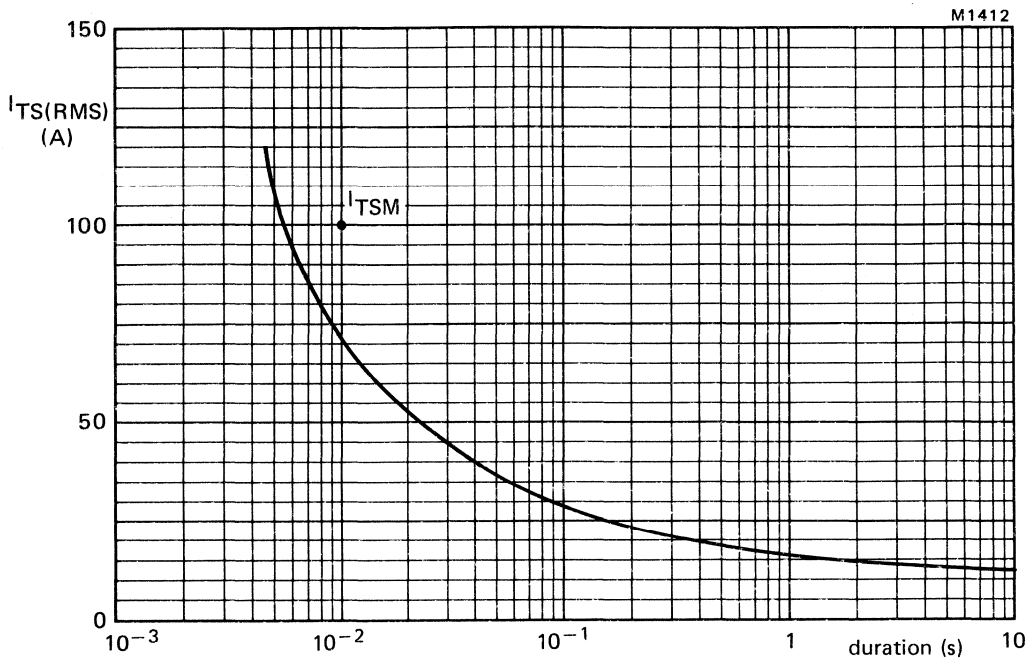

Fig.6 Maximum permissible non-repetitive r.m.s. on-state current based on sinusoidal currents (f = 50 Hz); T_j = 110 °C prior to surge; with reapplied V_{RWMmax}.

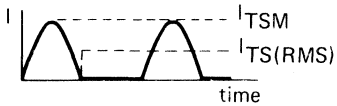

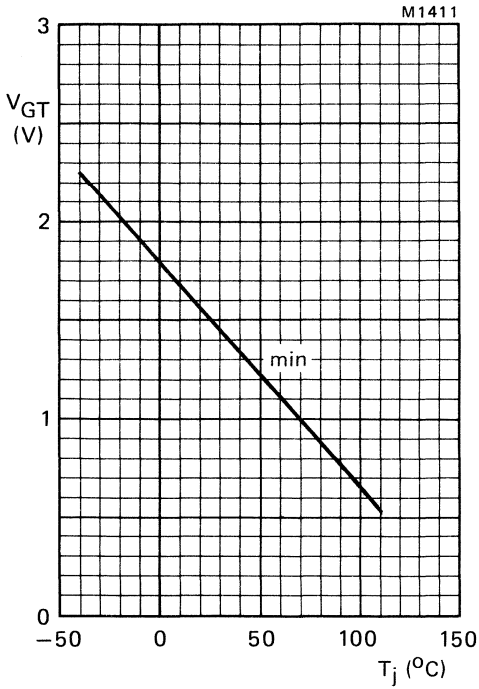

Fig.7 Minimum gate voltage that will trigger all devices as a function of junction temperature.

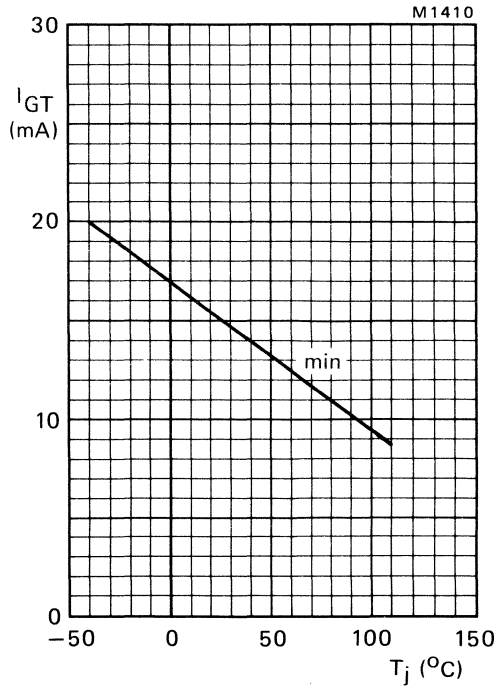

Fig.8 Minimum gate current that will trigger all devices as a function of junction temperature.

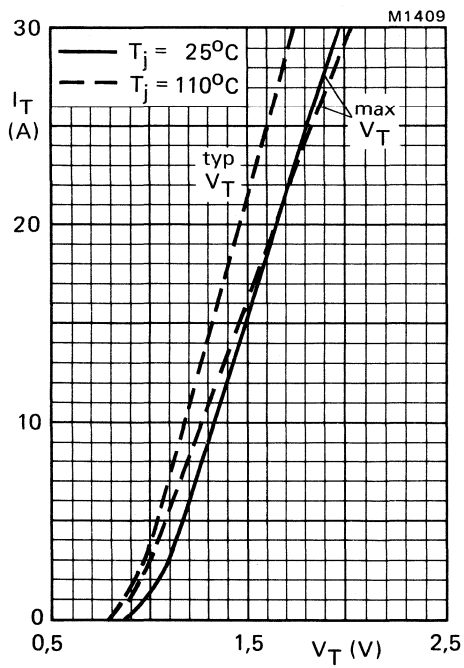

Fig.9 On-state voltage drop versus on-state current.

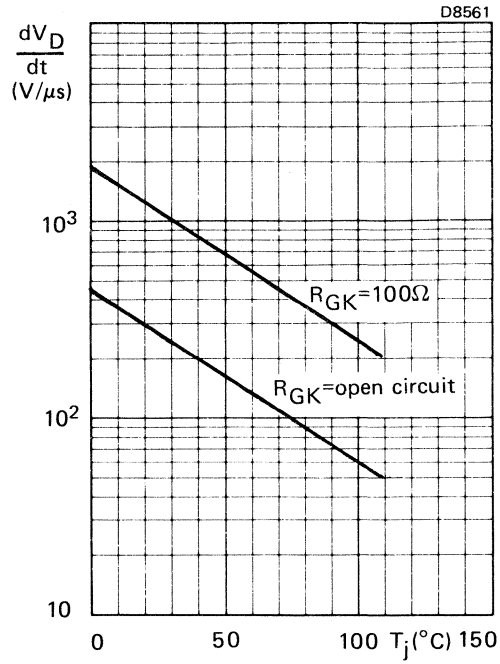

Fig.10 Maximum rate of rise of off-state voltage that will not trigger any device (exponential method) as a function of junction temperature.

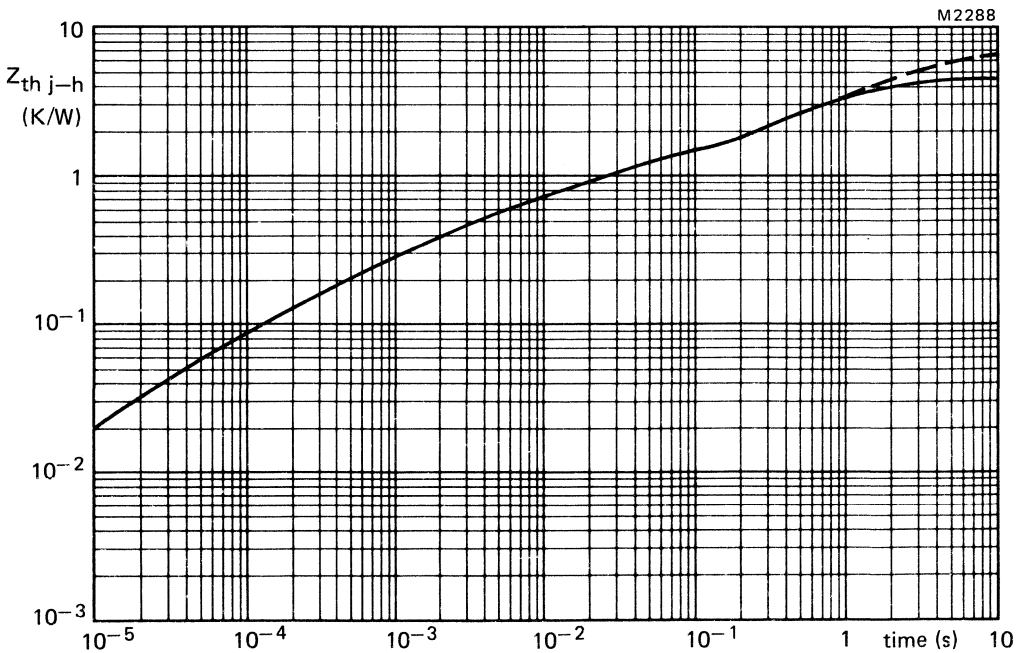

Fig.11 Transient thermal impedance; ——— with heatsink compound; — — — without heatsink compound.

THYRISTORS

Glass-passivated thyristors in TO–220AB envelopes, which are particularly suitable in situations creating high fatigue stresses involved in thermal cycling and repeated switching. Applications include temperature control, motor control, regulators in transformerless power supply applications, relay and coil pulsing and power supply crowbar protection circuits.

QUICK REFERENCE DATA

			BT152–400R	600R	800R	
Repetitive peak voltages	V_{DRM}/V_{RRM}	max.	400	600	800	V
Average on-state current	$I_{T(AV)}$	max.		13		A
R.M.S. on-state current	$I_{T(RMS)}$	max.		20		A
Non-repetitive peak on-state current	I_{TSM}	max.		200		A

MECHANICAL DATA

Dimensions in mm

Fig.1 TO–220AB

Pinning:

1 = Cathode

2 = Anode

3 = Gate

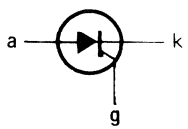

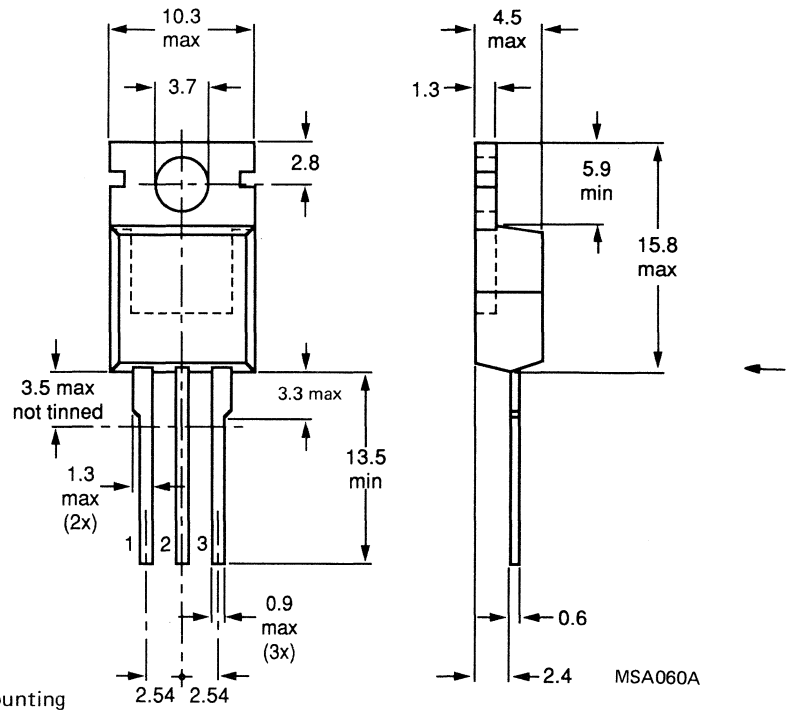

Net mass: 2 g

Note: The exposed metal mounting base is directly connected to the anode

Accessories supplied on request: see data sheets Mounting instructions and accessories for TO–220 envelopes.

Products approved to CECC 50 011-011 available on request.

RATINGS

Limiting values in accordance with the Absolute Maximum System (IEC 134)

Anode to cathode

			BT152–400R	600R	800R	
Non-repetitive peak voltages	V_{DSM}/V_{RSM}	max.	450	650	850	V
Repetitive peak voltages	V_{DRM}/V_{RRM}	max.	400	600	800	V
Crest working voltages	V_{DWM}/V_{RWM}	max.	400	400	400	V

Average on-state current (averaged over any 20 ms period) up to T_{mb} = 93 °C	$I_{T(AV)}$	max.	13	A
R.M.S. on-state current	$I_{T(RMS)}$	max.	20	A
Repetitive peak on-state current	I_{TRM}	max.	200	A
Non-repetitive peak on-state current; t = 10 ms; half sine-wave; T_j = 115 °C prior to surge; with reapplied V_{RWMmax}	I_{TSM}	max.	200	A
I^2t for fusing (t = 10 ms)	I^2t	max.	200	A^2s
Rate of rise of on-state current after triggering with I_G = 160 mA to I_T = 50 A; dI_G/dt = 160 A/ms	dI_T/dt	max.	200	A/μs

Gate to cathode

Reverse peak voltage	V_{RGM}	max.	5	V
Average power dissipation (averaged over any 20 ms period)	$P_{G(AV)}$	max.	0.5	W
Peak power dissipation; t ⩽ 10 μs	P_{GM}	max.	20	W

Temperature

Storage temperature	T_{stg}		−40 to +150	°C
Junction temperature	T_j	max.	115	°C

THERMAL RESISTANCE

From junction to mounting base	$R_{th\ j\text{-}mb}$	=	1.1	K/W
Transient thermal impedance; t = 1 ms	$Z_{th\ j\text{-}mb}$	=	0.12	K/W

Influence of mounting method

1. Heatsink mounted with clip (see mounting instructions)

Thermal resistance from mounting base to heatsink

a. with heatsink compound	$R_{th\ mb\text{-}h}$	=	0.3	K/W
b. with heatsink compound and 0.06 mm maximum mica insulator	$R_{th\ mb\text{-}h}$	=	1.4	K/W
c. with heatsink compound and 0.1 mm maximum mica insulator (56369)	$R_{th\ mb\text{-}h}$	=	2.2	K/W
d. with heatsink compound and 0.25 mm max. alumina insulator (56367)	$R_{th\ mb\text{-}h}$	=	0.8	K/W
e. without heatsink compound	$R_{th\ mb\text{-}h}$	=	1.4	K/W

2. Free-air operation

The quoted values of $R_{th\ j\text{-}a}$ should be used only when no leads of other dissipating components run to the same tie-point.

Thermal resistance from junction to ambient in free air: mounted on a printed-circuit board at a = any lead length and with copper laminate	$R_{th\ j\text{-}a}$	=	60	K/W

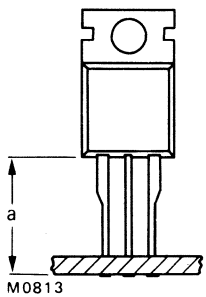

Fig. 2.

CHARACTERISTICS

Anode to cathode

On-state voltage (measured under pulse conditions)				
I_T = 40 A; T_j = 25 °C	V_T	<	1.75	V
Rate of rise of off-state voltage that will not trigger any device				
T_j = 115 °C; R_{GK} = open circuit	dV_D/dt	<	200	V/µs
Reverse current				
$V_R = V_{RWMmax}$; T_j = 115 °C	I_R	<	1.0	mA
Off-state current				
$V_D = V_{DWMmax}$; T_j = 115 °C	I_D	<	1.0	mA
Latching current; T_j = 25 °C	I_L	<	80	mA
Holding current; T_j = 25 °C	I_H	<	60	mA

Gate to cathode

Voltage that will trigger all devices				
V_D = 12 V; T_j = −40 °C	V_{GT}	>	1.5	V
V_D = 12 V; T_j = 25 °C	V_{GT}	>	1.0	V
Voltage that will not trigger any device				
$V_D = V_{DRMmax}$; T_j = 115 °C	V_{GD}	<	0.25	V
Current that will trigger all devices				
V_D = 12 V; T_j = −40 °C	I_{GT}	>	50	mA
V_D = 12 V; T_j = 25 °C	I_{GT}	>	32	mA

Switching characteristics

Gate-controlled turn-on time ($t_{gt} = t_d + t_r$) when switched from $V_D = V_{DRMmax}$ to I_T = 40 A; I_{GT} = 100 mA; dI_G/dt = 5 A/µs; T_j = 25 °C	t_{gt}	typ.	2	µs
Circuit-commutated turn-off time when switched from I_T = 40 A to V_R > 50 V with $-dI_T/dt$ = 10 A/µs; dV_D/dt = 50 V/µs; T_j = 115 °C	t_q	typ.	35	µs

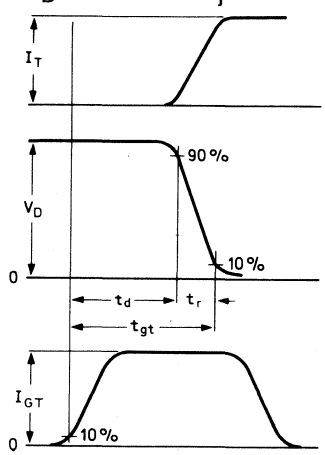

Fig.3a Gate-controlled turn-on time definition.

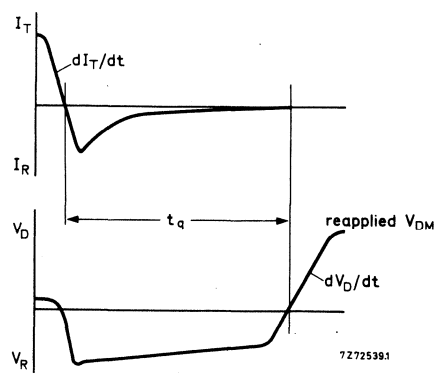

Fig.3b Circuit-commutated turn-off time definition.

MOUNTING INSTRUCTIONS

1. The device may be soldered directly into the circuit, but the maximum permissible temperature of the soldering iron or bath is 275 °C; it must not be in contact with the joint for more than 5 seconds. Soldered joints must be at least 4.7 mm from the seal.
2. The leads should not be bent less than 2.4 mm from the seal, and should be supported during bending. The leads can be bent, twisted or straightened by 90° maximum. The minimum bending radius is 1 mm.
3. It is recommended that the circuit connection be made to the anode tag, rather than direct to the heatsink.
4. Mounting by means of a spring clip is the best mounting method because it offers:
   a. a good thermal contact under the crystal area and slightly lower $R_{th\ mb\text{-}h}$ values than screw mounting.
   b. safe isolation for mains operation.
   However, if a screw is used, it should be M3 cross-recess pan-head. Care should be taken to avoid damage to the plastic body.
5. For good thermal contact, heatsink compound should be used between mounting base and heatsink. Values of $R_{th\ mb\text{-}h}$ given for mounting with heatsink compound refer to the use of a metallic-oxide loaded compound. Ordinary silicone grease is not recommended.
6. Rivet mounting (only possible for non-insulated mounting)

   Devices may be rivetted to flat heatsinks; such a process **must neither** deform the mounting tab, **nor** enlarge the mounting hole.
7. The heatsink must have a flatness in the mounting area of 0.02 mm maximum per 10 mm. Mounting holes must be deburred.

OPERATING NOTES

Dissipation and heatsink considerations:

a. The various components of junction temperature rise above ambient are illustrated in Fig.4.

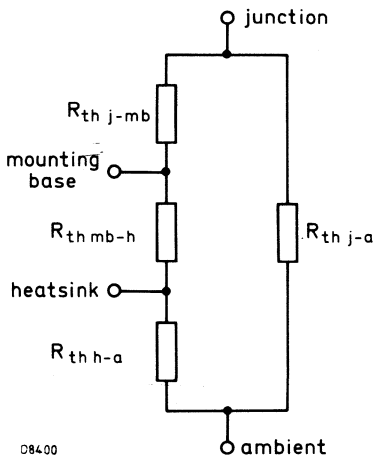

Fig.4

b. The method of using Fig.5 is as follows:
Starting with the required current on the $I_{T(AV)}$ axis, trace upwards to meet the appropriate form factor curve. Trace right horizontally and upwards from the appropriate value on the T_{amb} scale. The intersection determines the $R_{th\ mb\text{-}a}$. The heatsink thermal resistance value ($R_{th\ h\text{-}a}$) can now be calculated from:

$$R_{th\ h\text{-}a} = R_{th\ mb\text{-}a} - R_{th\ mb\text{-}h}.$$

c. Any measurement of heatsink temperature should be made immediately adjacent to the device.

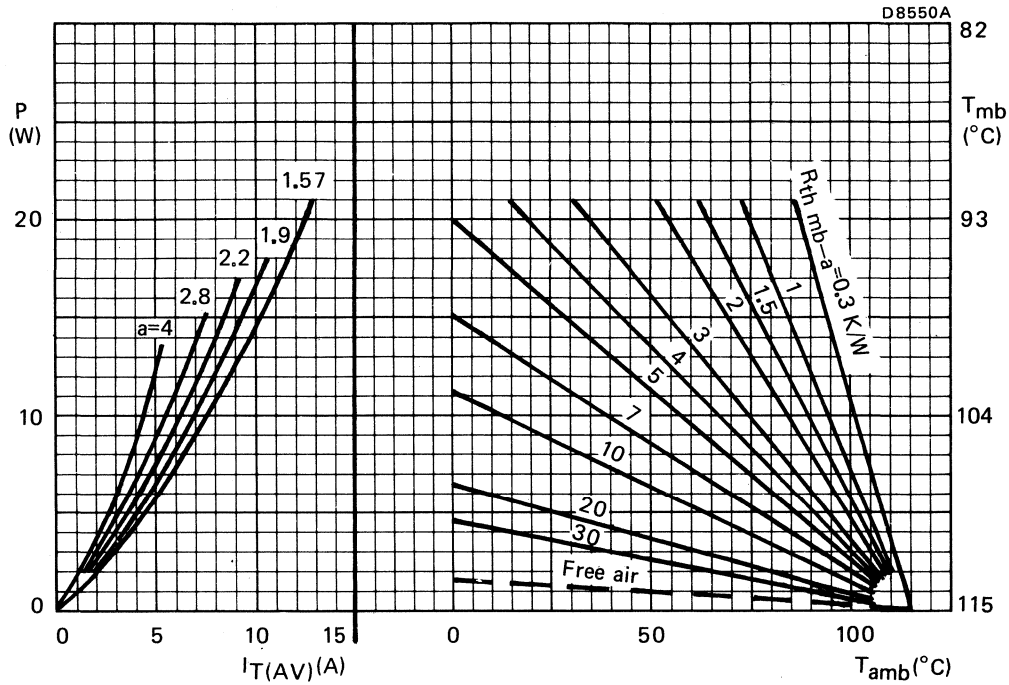

Fig.5 The right-hand part shows the interrelationship between the power (derived from the left-hand part) and the maximum permissible temperatures.

α = conduction angle per half cycle

$$a = \text{form factor} = \frac{I_{T\,(RMS)}}{I_{T(AV)}}$$

α	a
30°	4
60°	2.8
90°	2.2
120°	1.9
180°	1.57

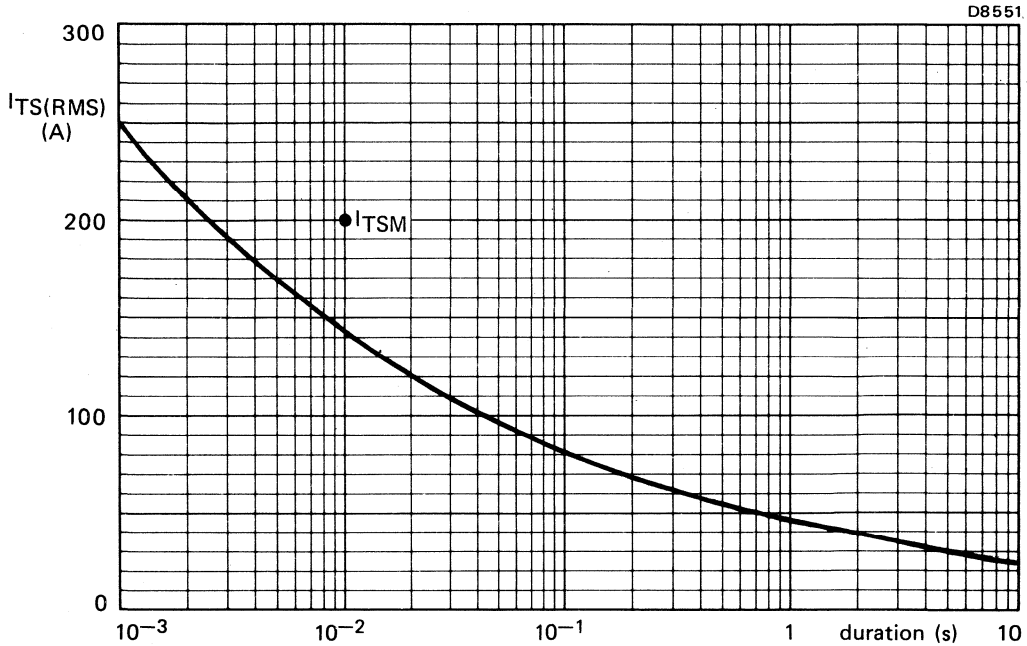

Fig.6 Maximum permissible non-repetitive r.m.s. on-state current based on sinusoidal currents (f = 50 Hz); T_j = 115 °C prior to surge; with reapplied V_{RWMmax}.

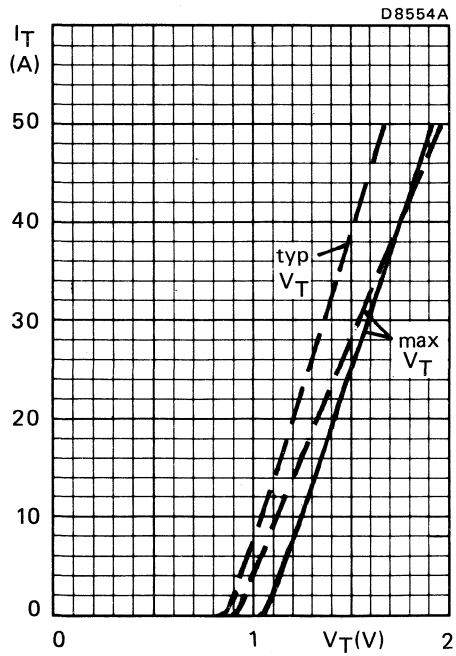

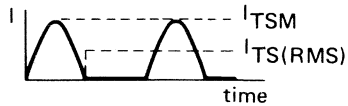

Fig.7 —— T_j = 25 °C; – – – T_j = 115 °C

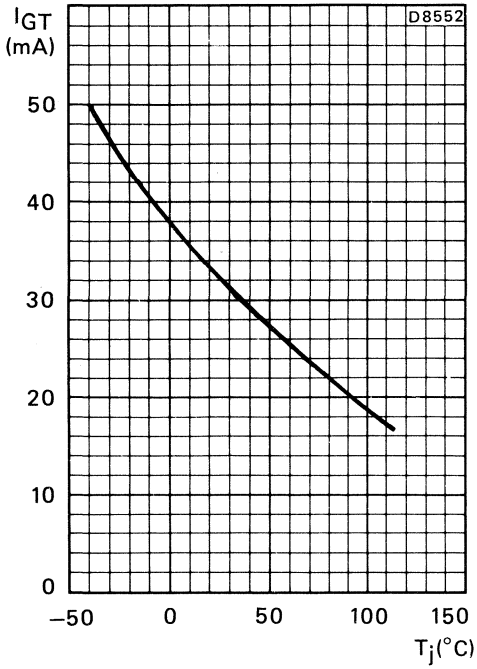

Fig. 8 Minimum gate current that will trigger all devices as a function of junction temperature.

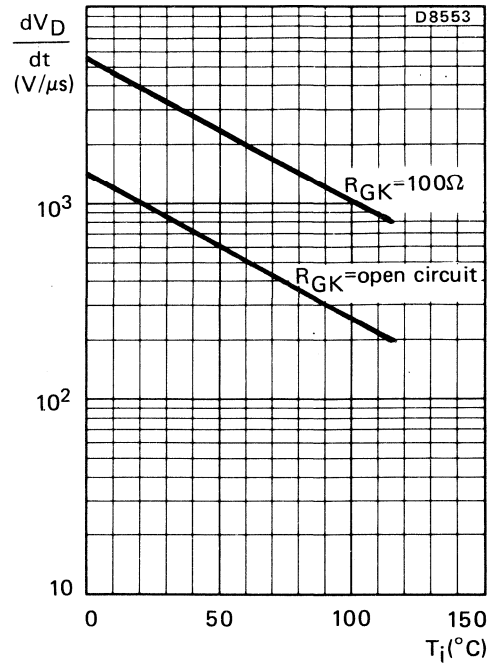

Fig. 9 Maximum rate of rise of off-state voltage that will not trigger any device as a function of junction temperature.

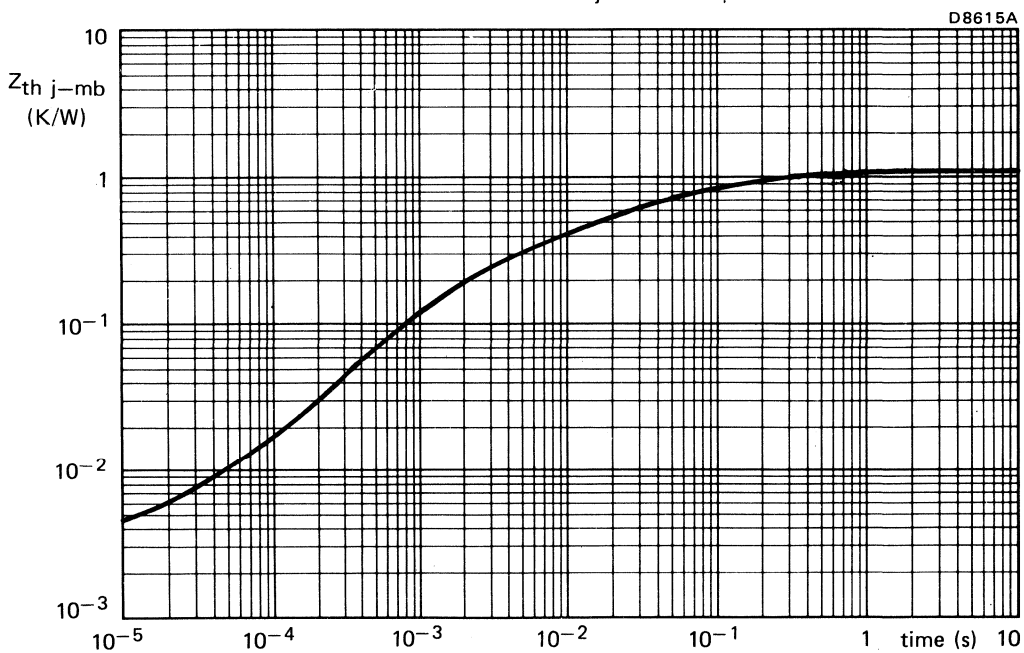

Fig. 10

FAST TURN-OFF THYRISTOR

Glass-passivated fast-turn-off thyristor in a TO-220AB envelope, intended for use in inverter, pulse and switching applications. Its characteristics make the device extremely suitable for use in regulator, vertical deflection, and east/west correction circuits of colour television receivers.

QUICK REFERENCE DATA

Repetitive peak off-state voltage	V_{DRM}	max.	500	V
Average on-state current	$I_{T(AV)}$	max.	4	A
R.M.S. on-state current	$I_{T(RMS)}$	max.	6	A
Repetitive peak on-state current	I_{TRM}	max.	30	A
Circuit-commutated turn-off time	t_q	<	20	μs

MECHANICAL DATA

Dimensions in mm

Fig. 1 TO-220AB.

Pinning:

1 = Cathode

2 = Anode

3 = Gate

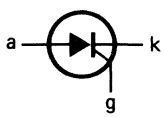

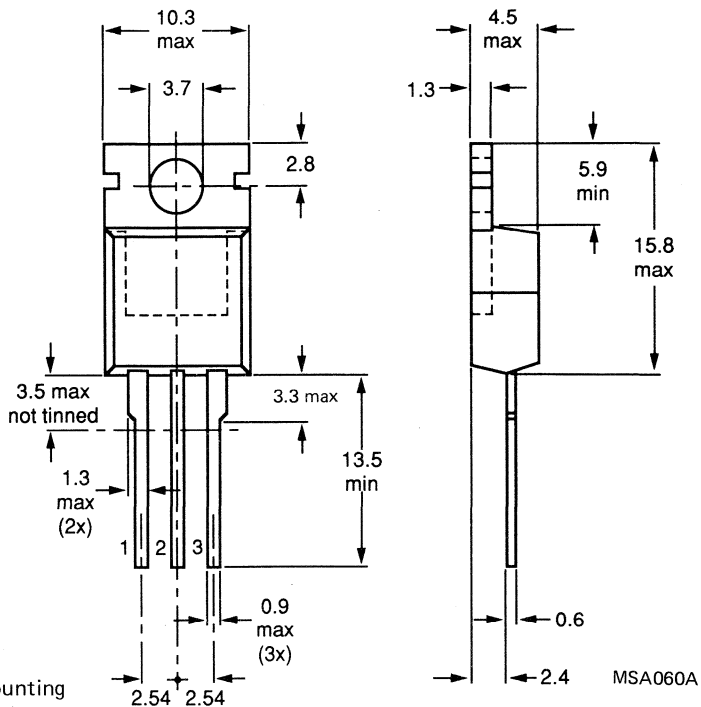

Net mass: 2 g

Note: The exposed metal mounting base is directly connected to the anode.

Accessories supplied on request: see data sheets Mounting instructions and accessories for TO-220 envelopes.

RATINGS

Limiting values in accordance with the Absolute Maximum System (IEC 134)

Anode to cathode

Non-repetitive peak voltages ($t \leqslant 10$ ms)	V_{DSM}/V_{RSM}	max.	550	V
Repetitive peak voltages	V_{DRM}/V_{RRM}	max.	500	V
Working voltages	V_{DW}/V_{RW}	max.	400	V *
Average on-state current (averaged over any 20 ms period) up to T_{mb} = 95 °C	$I_{T(AV)}$	max.	4	A
R.M.S. on-state current	$I_{T(RMS)}$	max.	6	A
Working peak on-state current	I_{TWM}	max.	10	A
Repetitive peak on-state current	I_{TRM}	max.	30	A
Non-repetitive peak on-state current; t = 10 ms; half sine-wave; T_j = 110 °C prior to surge; with reapplied V_{RWMmax}	I_{TSM}	max.	40	A
I^2t for fusing; t = 10 ms; T_j = 25 °C	I^2t	max.	10	A^2s
Rate of rise of on-state current after triggering up to f = 20 kHz; V_{DM} = 300 V to I_{TM} = 6 A	dI_T/dt	max.	200	A/μs

Gate to cathode

Average power dissipation (averaged over any 20 ms period)	$P_{G(AV)}$	max.	1	W
Peak power dissipation; t = 10 μs	P_{GM}	max.	25	W

Temperatures

Storage temperature	T_{stg}		−40 to + 125	°C
Operating junction temperature	T_j	max.	110	°C

* Voltage shapes as occurring in the intended application.

THERMAL RESISTANCE

From junction to mounting base	$R_{th\ j\text{-}mb}$	=	1,5 °C/W
Transient thermal impedance; t = 1 ms	$Z_{th\ j\text{-}mb}$	=	0,2 °C/W

Influence of mounting method

1. Heatsink mounted with clip (see mounting instructions)

Thermal resistance from mounting base to heatsink

a. with heatsink compound	$R_{th\ mb\text{-}h}$	=	0,3 °C/W
b. with heatsink compound and 0,06 mm maximum mica insulator	$R_{th\ mb\text{-}h}$	=	1,4 °C/W
c. with heatsink compound and 0,1 mm maximum mica insulator (56369)	$R_{th\ mb\text{-}h}$	=	2,2 °C/W
d. with heatsink compound and 0,25 mm max. alumina insulator (56367)	$R_{th\ mb\text{-}h}$	=	0,8 °C/W
e. without heatsink compound	$R_{th\ mb\text{-}h}$	=	1,4 °C/W

2. Free-air operation

The quoted values of $R_{th\ j\text{-}a}$ should be used only when no leads of other dissipating components run to the same tie-point.

Thermal resistance from junction to ambient in free air: mounted on a printed-circuit board at a = any lead length and with copper laminate	$R_{th\ j\text{-}a}$	=	60 °C/W

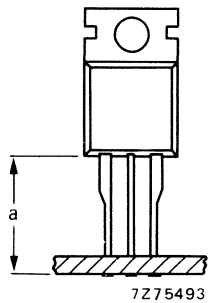

Fig. 2.

CHARACTERISTICS

Anode to cathode

On-state voltage I_T = 10 A; T_j = 25 °C	V_T	<	2,5 V *
Rate of rise of off-state voltage that will not trigger any device; $T_j \leqslant 110$ °C	dV_D/dt	<	200 V/μs
Off-state current $V_D = V_{DRMmax}$; T_j = 110 °C	I_D	<	1,5 mA
Holding current; T_j = 25 °C	I_H	<	100 mA

Gate to cathode

Voltage that will trigger all devices V_D = 6 V; T_j = 25 °C; $t_p \geqslant 5$ μs	V_{GT}	>	2,5 V
Current that will trigger all devices V_D = 6 V; T_j = 25 °C; $t_p \geqslant 5$ μs	I_{GT}	>	40 mA

Switching characteristics

Circuit-commutated turn-off time (in regulating circuits) when switched from I_T = 10 A to $V_R \geqslant 50$ V with $-dI_T/dt$ = 10 A/μs; dV_D/dt = 200 V/μs; V_{DM} = 500 V; R_{GK} = 68 Ω; T_{mb} = 80 °C; $t_p \leqslant 50$ μs	t_q	<	20 μs

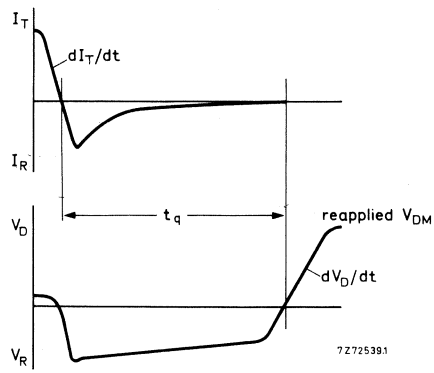

Fig. 3 Circuit-commutated turn-off time definition.

* Measured under pulse conditions to avoid excessive dissipation.

MOUNTING INSTRUCTIONS

1. The device may be soldered directly into the circuit, but the maximum permissible temperature of the soldering iron or bath is 275 °C; it must not be in contact with the joint for more than 5 seconds. Soldered joints must be at least 4.7 mm from the seal.
2. The leads should not be bent less than 2.4 mm from the seal, and should be supported during bending. The leads can be bent, twisted or straightened by 90° maximum. The minimum bending radius is 1 mm.
3. It is recommended that the circuit connection be made to the anode tag, rather than direct to the heatsink.
4. Mounting by means of a spring clip is the best mounting method because it offers:
   a. a good thermal contact under the crystal area and slightly lower $R_{th\ mb\text{-}h}$ values than screw mounting.
   b. safe isolation for mains operation.
   However, if a screw is used, it should be M3 cross-recess pan-head. Care should be taken to avoid damage to the plastic body.
5. For good thermal contact, heatsink compound should be used between mounting base and heatsink. Values of $R_{th\ mb\text{-}h}$ given for mounting with heatsink compound refer to the use of a metallic-oxide loaded compound. Ordinary silicone grease is not recommended.
6. Rivet mounting (only possible for non-insulated mounting)

   Devices may be rivetted to flat heatsinks; such a process **must neither** deform the mounting tab, **nor** enlarge the mounting hole.
7. The heatsink must have a flatness in the mounting area of 0.02 mm maximum per 10 mm. Mounting holes must be deburred.

OPERATING NOTES

Dissipation and heatsink considerations:

a. The various components of junction temperature rise above ambient are illustrated in Fig.4.

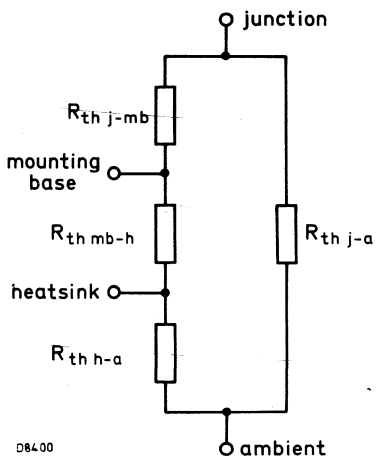

Fig.4

b. The method of using Fig.5 is as follows:
Starting with the required current on the $I_{T(AV)}$ axis, trace upwards to meet the appropriate form factor curve. Trace right horizontally and upwards from the appropriate value on the T_{amb} scale. The intersection determines the $R_{th\ mb\text{-}a}$. The heatsink thermal resistance value ($R_{th\ h\text{-}a}$) can now be calculated from:

$$R_{th\ h\text{-}a} = R_{th\ mb\text{-}a} - R_{th\ mb\text{-}h}.$$

c. Any measurement of heatsink temperature should be made immediately adjacent to the device.

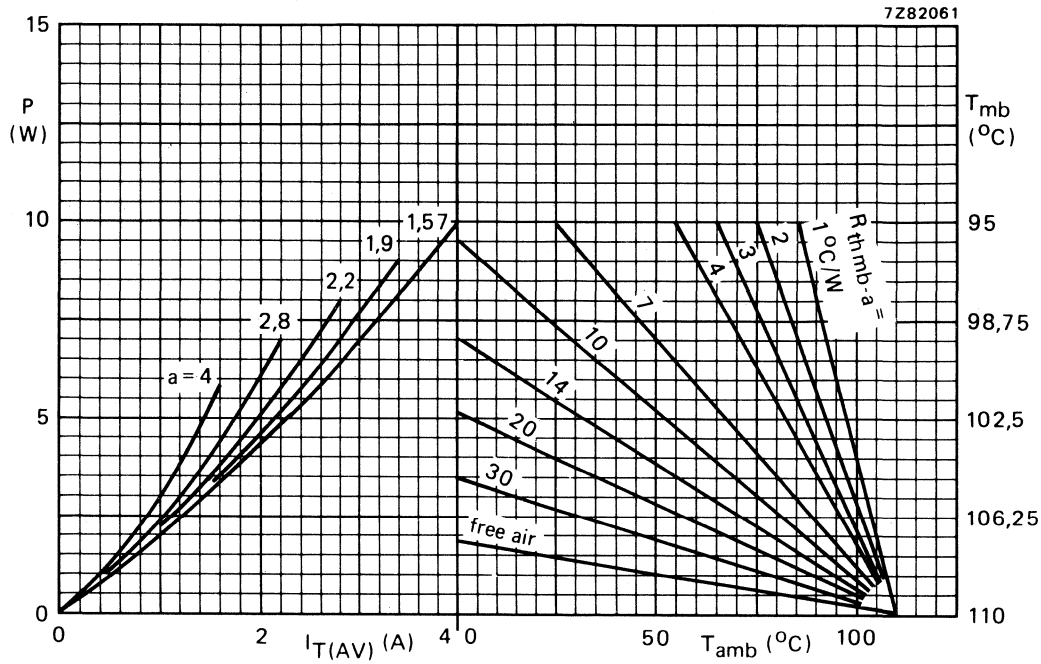

Fig. 5 The right-hand part shows the interrelationship between the power (derived from the left-hand part) and the maximum permissible temperatures.

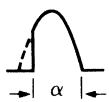

α = conduction angle per half cycle

$$a = \text{form factor} = \frac{I_{T(RMS)}}{I_{T(AV)}}$$

α	a
30°	4
60°	2,8
90°	2,2
120°	1,9
180°	1,57

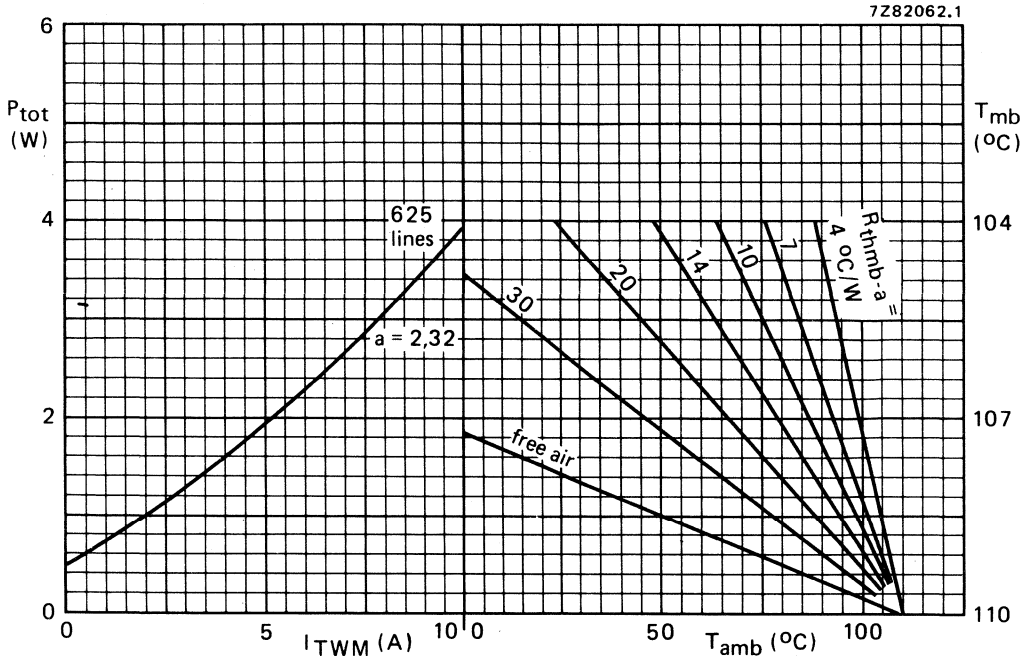

Fig. 6 The right-hand part shows the interrelationship between the power (derived from the left-hand part) and the maximum permissible temperatures.
P_{tot} = maximum power dissipation including gate and switching losses.
I_{TWM} = maximum working peak on-state current.

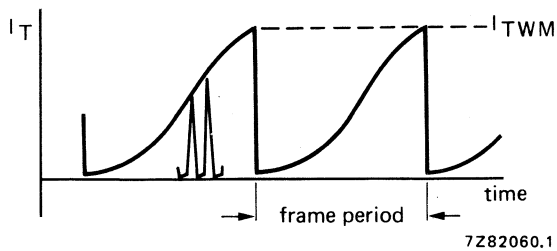

Fig. 7 Waveform defining I_{TWM}.

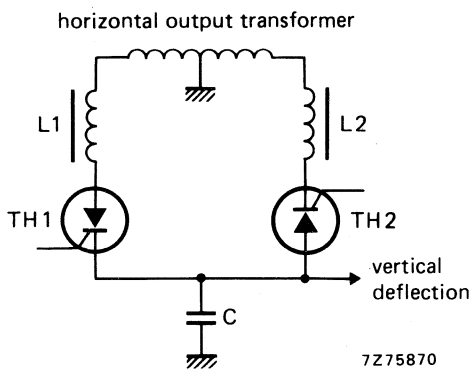

Fig. 8 Basic circuit of a vertical deflection system.

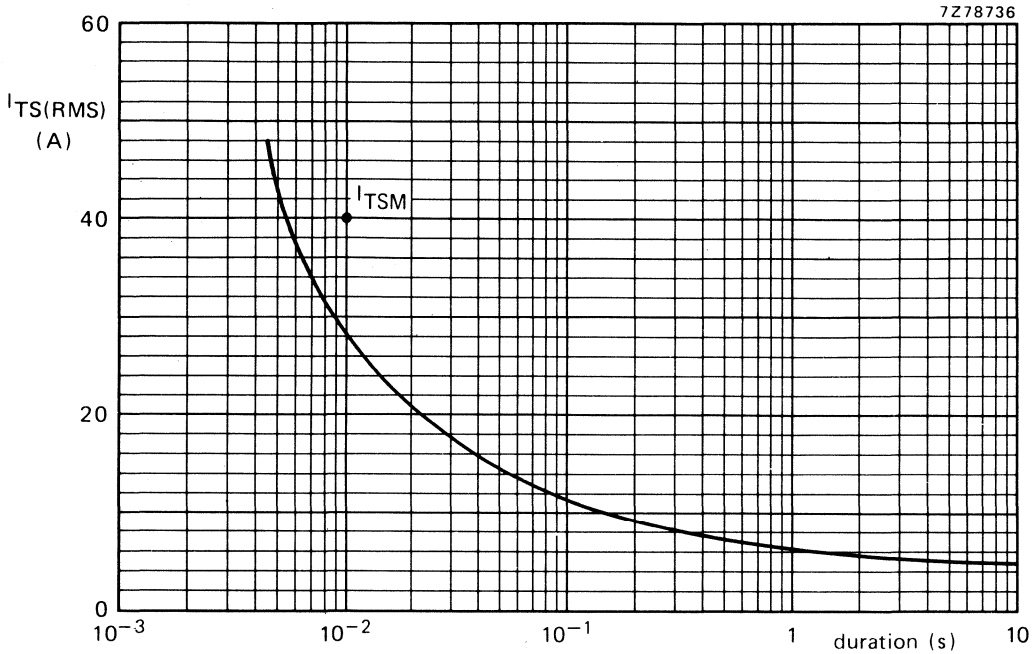

Fig. 9 Maximum permissible non-repetitive r.m.s. on-state current based on sinusoidal currents (f = 50 Hz); T_j = 110 °C prior to surge; with reapplied V_{RWMmax}.

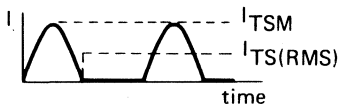

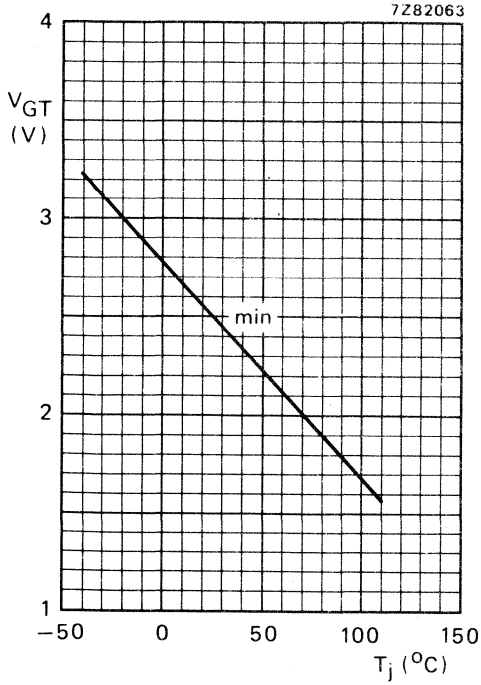

Fig. 10 Minimum gate voltage that will trigger all devices as a function of junction temperature.

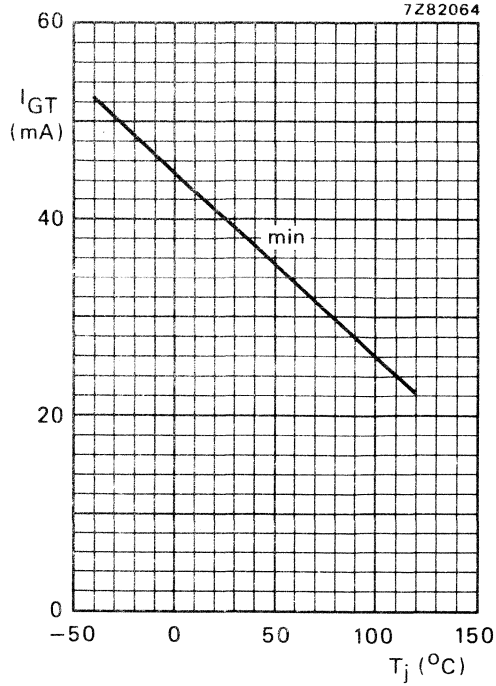

Fig. 11 Minimum gate current that will trigger all devices as a function of junction temperature.

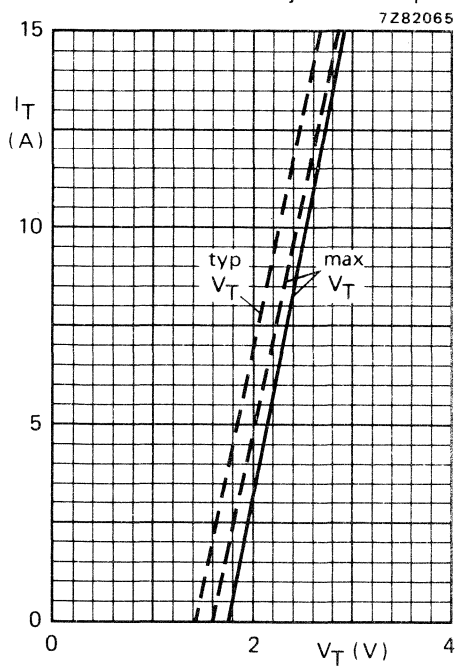

Fig. 12 —— T_j = 25 °C; – – – T_j = 110 °C.

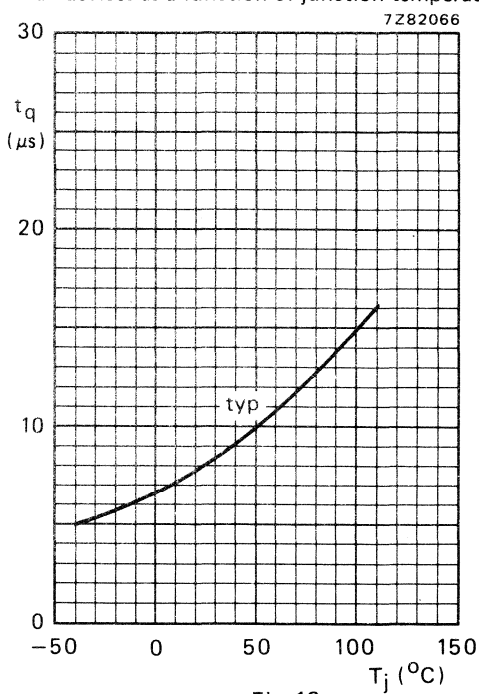

Fig. 13.

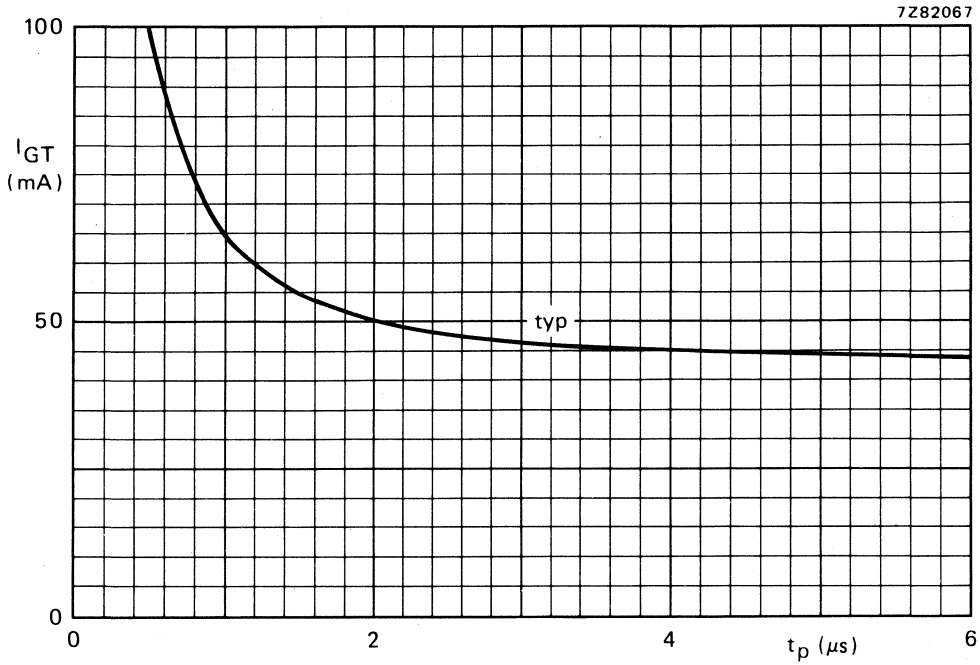

Fig. 14 Gate current that will trigger all devices as a function of rectangular pulse width; T_j = 25 °C.

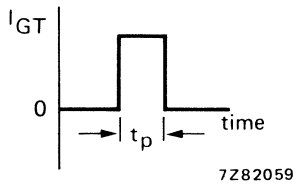

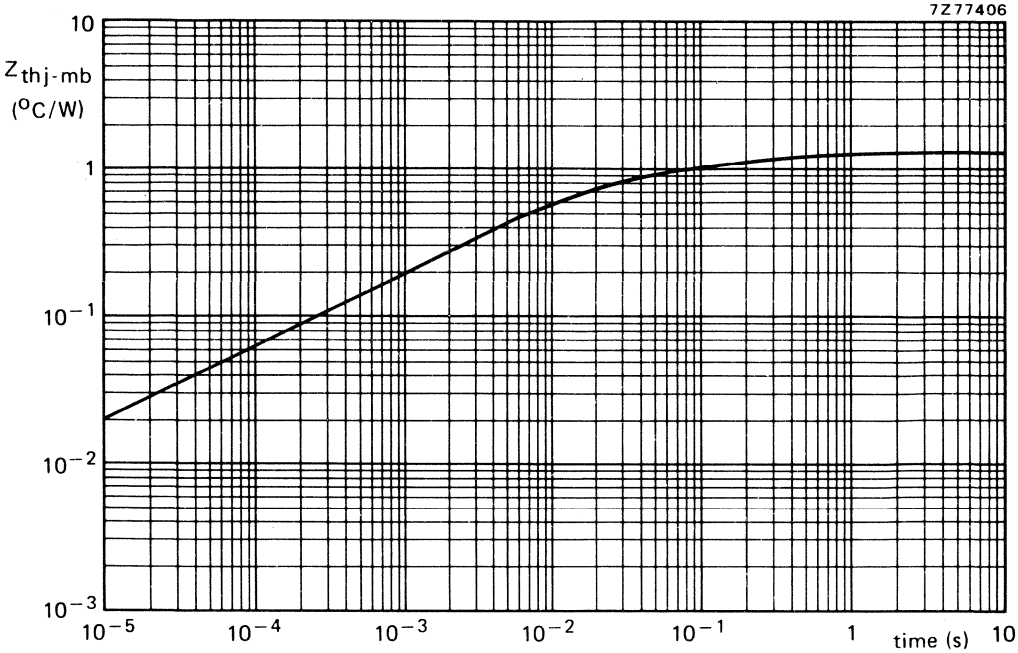
7Z77406
10
Z_{thj-mb}
(°C/W)
1
10^{-1}
10^{-2}
10^{-3}
10^{-5}
10^{-4}
10^{-3}
10^{-2}
10^{-1}
1
time (s)
10

Fig. 15.

THYRISTORS

Fully-diffused thyristors in TO–92 package, with low gate current requirement suitable for driving from IC outputs. Applications include relay and coil pulsing, control of small DC motors, small lamps, etc.

QUICK REFERENCE DATA

			BT169–B	D	E	G	
Repetitive peak voltages	V_{DRM}/V_{RRM}	max.	200	400	500	600	V
Average on-state current	$I_{T(AV)}$	max.	0.5				A
RMS on-state current	$I_{T(RMS)}$	max.	0.8				A
Non-repetitive peak on-state current	I_{TSM}	max.	8				A

MECHANICAL DATA

Dimensions in mm

Fig.1 TO–92 variant

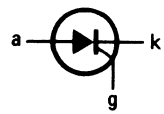

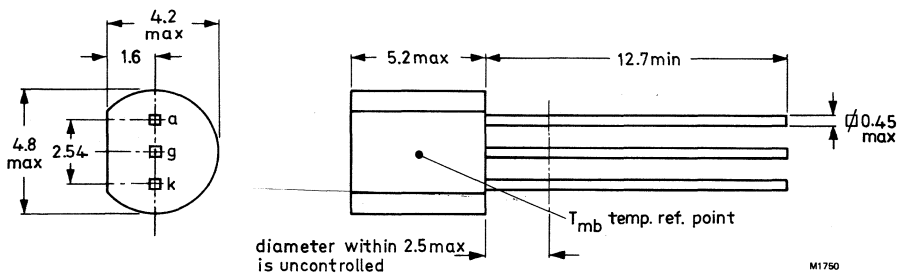

RATINGS

Limiting values in accordance with the Absolute Maximum System (IEC 134).

Anode to cathode			BT169–B	D	E	G	
Non-repetitive peak voltages ($t \leqslant 10$ ms)	V_{DSM}/V_{RSM}	max.	200	400	500	600	V
Repetitive peak voltages ($\delta \leqslant 0.01$)	V_{DRM}/V_{RRM}	max.	200	400	500	600	V
Crest-working off-state voltage	V_{DWM}/V_{RWM}	max.	200	400	400	400	V

Average on-state current (averaged over any 20 ms period up to $T_c = 55$ °C	$I_{T(AV)}$	max.	0.5	A
RMS on-state current	$I_{T(RMS)}$	max.	0.8	A
Repetitive peak on-state current	I_{TRM}	max.	8	A
Non-repetitive peak on-state current; t = 10 ms; half sinewave; $T_j = 125$ °C prior to surge; with reapplied V_{RWMmax}	I_{TSM}	max.	8	A
I^2t for fusing (t = 10 ms)	I^2t	max.	0.32	A^2s
Gate to cathode				
Peak reverse voltage	V_{RGM}	max.	5	V
Average power dissipation (averaged over any 20 ms period)	$P_{G(AV)}$	max.	0.1	W
Peak power dissipation	P_{GM}	max.	2	W
Temperatures				
Storage temperature	T_{stg}		−40 to +150	°C
Operating junction temperature	T_j	max.	125	°C

THERMAL RESISTANCE

From junction to ambient in free air	$R_{th\ j\text{-}a}$	=	150	K/W*

*Device mounted on printed circuit board, max. lead length 4 mm.

CHARACTERISTICS

Anode to cathode

On-state voltage I_T = 1 A; T_j = 25 °C	V_T	<	1.35	V*
Rate of rise of off-state voltage that will not trigger any device; exponential method; V_D = 2/3 $V_{DRM\ max}$; R_{GK} = 1 kΩ; T_j = 125 °C	dV/dt	typ.	25	V/μs
Reverse current V_R = V_{RRMmax}; R_{GK} = 1 kΩ; T_j = 125 °C	I_R	<	0.1	mA
Off-state current V_D = V_{DRMmax}; R_{GK} = 1 kΩ; T_j = 125 °C	I_D	<	0.1	mA
Latching current V_D = 12 V; R_{GK} = 1 kΩ; T_j = 25 °C	I_L	<	6	mA
Holding current V_D = 12 V; R_{GK} = 1 kΩ; T_j = 25 °C	I_H	<	5	mA

Gate to cathode

Voltage that will trigger all devices V_D = 12 V; T_j = 25 °C	V_{GT}	>	0.8	V
Current that will trigger all devices V_D = 12 V; T_j = 25 °C	I_{GT}	>	0.2	mA

*Measured under pulse conditions to avoid excessive dissipation.

TRIACS

Glass-passivated 25 ampere triacs intended for use in applications requiring high bidirectional transient and blocking voltage capability and high thermal cycling performance with very low thermal resistances. These triacs feature a high surge current capability. Typical applications include AC power control applications such as motor, industrial lighting, industrial and domestic heating control and static switching systems.

QUICK REFERENCE DATA

			BTA140–500	600	700	800	
Repetitive peak off-state voltage	V_{DRM}	max.	500	600	700	800	V
RMS on-state current	$I_{T(RMS)}$	max.		25			A
Non-repetitive peak on-state current (50 Hz)							
at 50 Hz	I_{TSM}	max.		180			A
at 60 Hz	I_{TSM}	max.		200			A

MECHANICAL DATA

Fig.1 TO–220AB

Dimensions in mm

Pinning:

1 = Terminal 1

2 = Terminal 2

3 = Gate

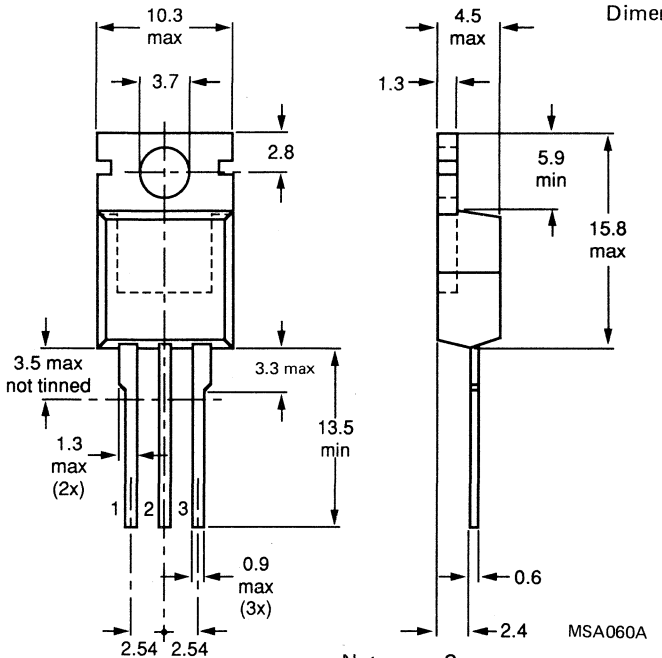

Net mass- 2 g

Note: The exposed metal mounting base is directly connected to terminal T_2.

Accessories supplied on request: see data sheet Mounting instructions and accessories for TO-220 envelopes.

RATINGS

Limiting values in accordance with the Absolute Maximum System (IEC134).

Voltages (in either direction)			BTA140–500	600	700	800	
Non-repetitive peak off-state voltage ($t \leqslant 10$ ms)	V_{DSM}	max.	500*	600*	700*	800	V
Repetitive peak off-state voltage ($\delta \leqslant 0.01$)	V_{DRM}	max.	500	600	700	800	V
Crest working off-state voltage	V_{DWM}	max.	400	400	400	400	V
Currents (in either direction)							
RMS on-state current (conduction angle 360°) up to T_{mb} = 89 °C	$I_{T(RMS)}$	max.	25				A
Average on-state current for half-cycle operation (averaged over any 20 ms period) up to T_{mb} = 85 °C	$I_{T(AV)}$	max.	18				A
Repetitive peak on-state current	I_{TRM}	max.	180				A
Non-repetitive peak on-state current; T_j = 120 °C prior to surge; full sinewave							
t = 20 ms	I_{TSM}	max.	180				A
t = 16.7 ms	I_{TSM}	max.	200				A
I^2t for fusing (t = 10 ms)	I^2t	max.	160				A^2s
Rate of rise of on-state current after triggering with I_G = 200 mA to I_T = 30 A; dI_G/dt = 0.2 A/μs	dI_T/dt	max.	30				A/μs
Gate to terminal 1							
Power dissipation							
Average power dissipation (averaged over any 20 ms period)	$P_{G(AV)}$	max.	0.5				W
Peak power dissipation	P_{GM}	max.	5				W
Temperatures							
Storage temperature	T_{stg}		−40 to +125				°C
Operating junction temperature							
full-cycle operation	T_j	max.	120				°C
half-cycle operation	T_j	max.	110				°C

*Although not recommended, off-state voltages up to 800 V may be applied without damage, but the triac may switch into the on-state. The rate of rise of on-state current should not exceed 15 A/μs.

THERMAL RESISTANCE

From junction to mounting base

full-cycle operation	$R_{th\ j\text{-}mb}$	= 1.0 K/W
half-cycle operation	$R_{th\ j\text{-}mb}$	= 1.4 K/W
Transient thermal impedance; t = 1 ms	$Z_{th\ j\text{-}mb}$	= 0.1 K/W

Influence of mounting method

1. Heatsink mounted with clip (see mounting instructions)

Thermal resistance from mounting base to heatsink

a. with heatsink compound	$R_{th\ mb\text{-}h}$	= 0.3 K/W
b. with heatsink compound and 0.06 mm maximum mica insulator	$R_{th\ mb\text{-}h}$	= 1.4 K/W
c. with heatsink compound and 0.1 mm maximum mica insulator (56369)	$R_{th\ mb\text{-}h}$	= 2.2 K/W
d. with heatsink compound and 0.25 mm maximum alumina insulator (56367)	$R_{th\ mb\text{-}h}$	= 0.8 K/W
e. without heatsink compound	$R_{th\ mb\text{-}h}$	= 1.4 K/W

2. Free-air operation

The quoted values of $R_{th\ j\text{-}a}$ should be used only when no leads of other dissipating components run to the same tie-point.

Thermal resistance from junction to ambient in free air:

mounted on a printed-circuit board at a = any lead length	$R_{th\ j\text{-}a}$	= 60 K/W

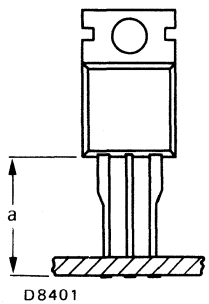

Fig.2

CHARACTERISTICS (T_j = 25 °C unless otherwise stated)

Polarities, positive or negative, are identified with respect to T_1.

Voltages and currents (in either direction)

On-state voltage (measured under pulse conditions to prevent excessive dissipation)				
I_T = 30 A	V_T	<	1.55	V
Rate of rise of off-state voltage that will not trigger any device; T_j = 120 °C; gate open circuit	dV_D/dt	<	100	V/μs
Rate of change of commutating voltage that will not trigger any device when $-dI_{com}/dt$ = 9.0 A/ms $I_{T(RMS)}$ = 25 A; T_{mb} = 75 °C; gate open circuit; $V_D = V_{DWMmax}$	dV_{com}/dt	typ.	10	V/μs
Off-state current $V_D = V_{DWMmax}$; T_j = 120 °C	I_D	<	0.5	mA
Gate voltage that will trigger all devices	V_{GT}	>	1.5	V
Gate voltage that will not trigger any device $V_D = V_{DWMmax}$; T_j = 120 °C; T_2 and G positive or negative	V_{GD}	<	250	mV

			T_2+ G+	T_2+ G−	T_2- G−	T_2- G+	
Gate current that will trigger all devices; G to T_1	I_{GT}	>	35	35	35	70	mA
Holding Current	I_H	<	30	30	30	30	mA
Latching current; V_D = 12 V; T_j = 25 °C	I_L	<	40	60	40	60	mA

MOUNTING INSTRUCTIONS

1. The device may be soldered directly into the circuit, but the maximum permissible temperature of the soldering iron or bath is 275 °C; it must not be in contact with the joint for more than 5 seconds. Soldered joints must be at least 4.7 mm from the seal.
2. The leads should not be bent less than 2.4 mm from the seal, and should be supported during bending. The leads can be bent, twisted or straightened by 90° maximum. The minimum bending radius is 1 mm.
3. It is recommended that the circuit connection be made to tag T_2, rather than direct to the heatsink.
4. Mounting by means of a spring clip is the best mounting method because it offers:
   a. a good thermal contact under the crystal area and slightly lower $R_{th\ mb\text{-}h}$ values than screw mounting.
   b. safe isolation for mains operation.
   However, if a screw is used, it should be M3 cross-recess pan-head. Care should be taken to avoid damage to the plastic body.
5. For good thermal contact, heatsink compound should be used between mounting base and heatsink. Values of $R_{th\ mb\text{-}h}$ given for mounting with heatsink compound refer to the use of a metallic oxide-loaded compound. Ordinary silicone grease is not recommended.
6. Rivet mounting (only possible for non-insulated mounting)
   Devices may be rivetted to flat heatsinks; such a process must neither deform the mounting tab, nor enlarge the mounting hole. The maximum recommended hole size for rivet mounting is 3.5 mm. The pre-formed head of the rivet should be on the device side and any rivet tool used should not damage the plastic body of the device.
7. The heatsink must have a flatness in the mounting area of 0.02 mm maximum per 10 mm. Mounting holes must be deburred.

OPERATING NOTES

Dissipation and heatsink considerations:

a. The various components of junction temperature rise above ambient are illustrated in Fig.3.

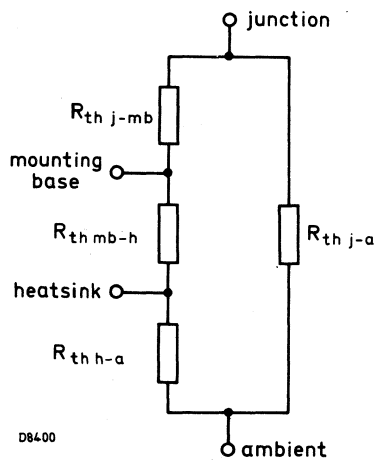

Fig.3.

b. The method of using Fig.4 is as follows:
Starting with the required current on the $I_{T(RMS)}$ axis, trace upwards to meet the appropriate conduction angle curve. Trace right horizontally and upwards from the appropriate value on the T_{amb} scale. The intersection determines the $R_{th\ mb\text{-}a}$. The heatsink thermal resistance value ($R_{th\ h\text{-}a}$) can now be calculated from:

$$R_{th\ h\text{-}a} = R_{th\ mb\text{-}a} - R_{th\ mb\text{-}h}.$$

c. Any measurement of heatsink temperature should be made immediately adjacent to the device.

FULL-CYCLE OPERATION

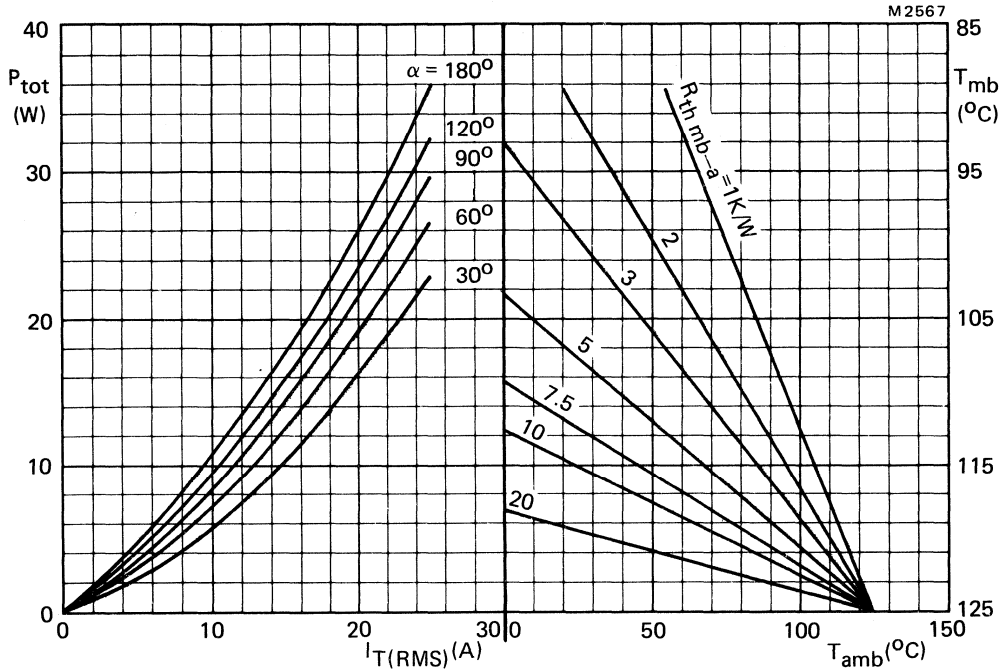

Fig.4 The right-hand part shows the interrelationship between the power (derived from the left-hand part) and the maximum permissible temperatures.

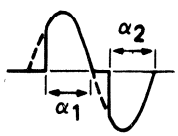

$\alpha = \alpha_1 = \alpha_2$: conduction angle per half cycle

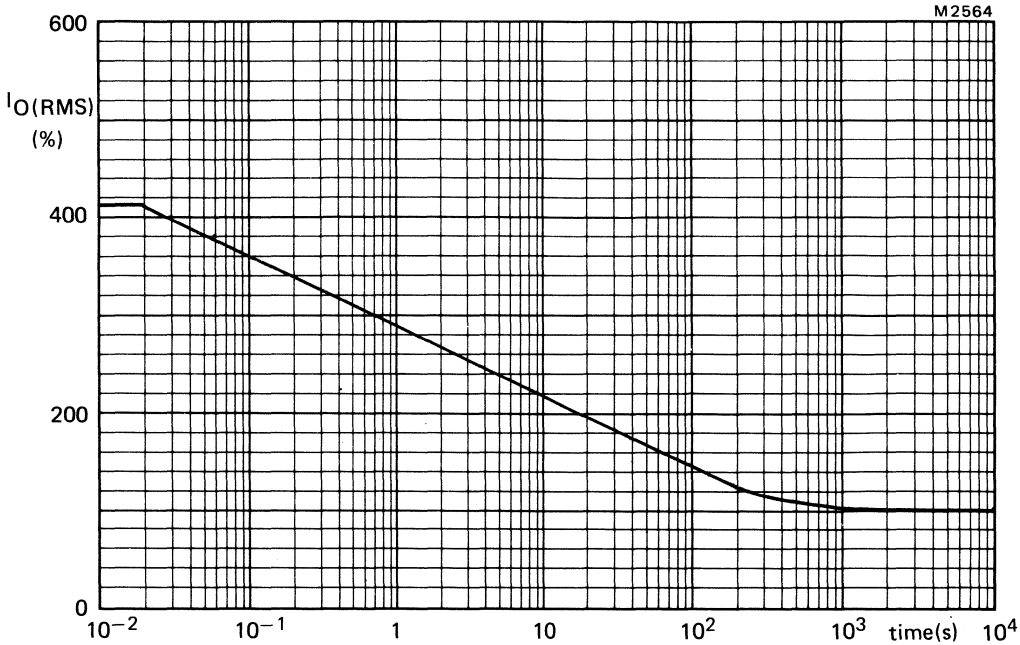

Fig.5 Maximum permissible duration of steady overload (provided that T_{mb} does not exceed 120 °C during and after overload) expressed as a percentage of the steady state r.m.s. rated current. For high r.m.s. overload currents precautions should be taken so that the temperature of the terminals does not exceed 125 °C. During these overload conditions the triac may lose control. Therefore the overload should be terminated by a separate protection device.

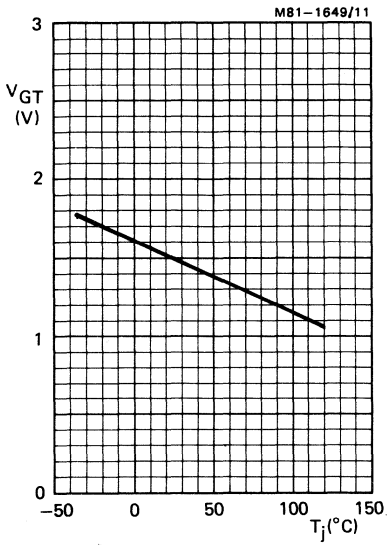

Fig.6 Minimum gate voltage that will trigger all devices; all conditions.

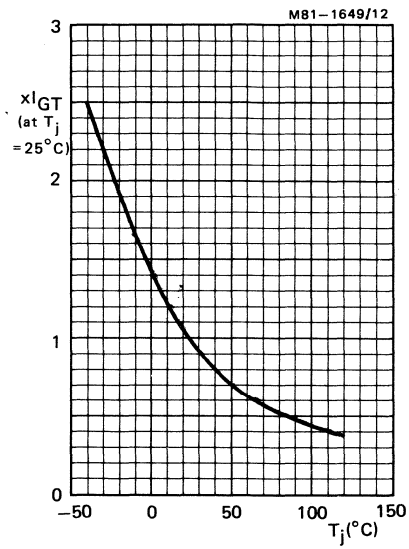

Fig.7 Normalised gate current that will trigger all devices; all conditions.

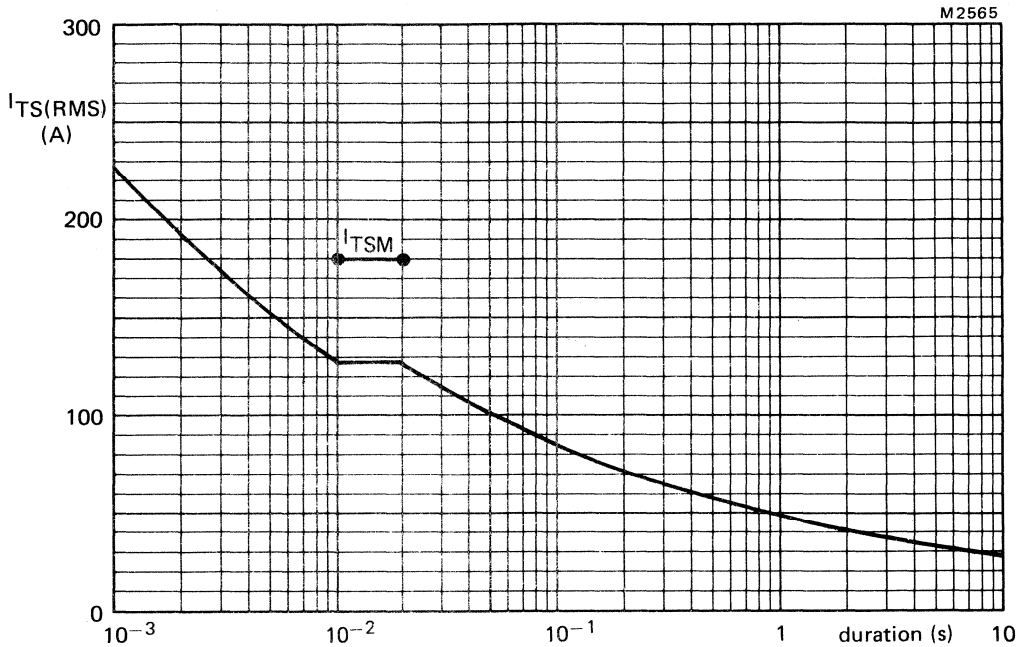

Fig.8 Maximum permissible non-repetitive r.m.s. on-state current based on sinusoidal currents (f = 50 Hz); T_j = 120 °C prior to surge. The triac may temporarily lose control following the surge.

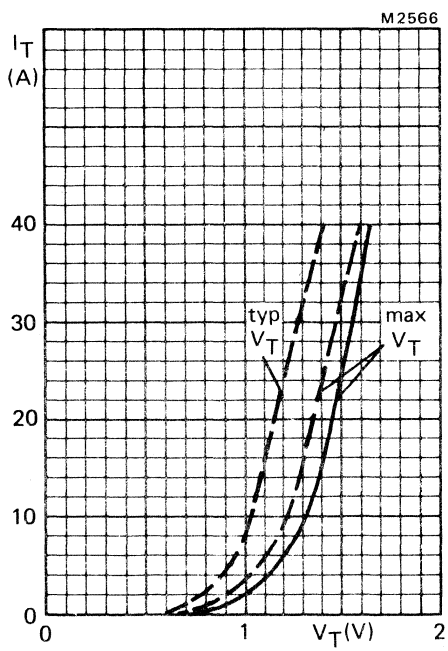

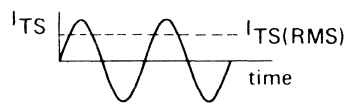

Fig.9—— T_j = 25 °C; ---- T_j = 120 °C.

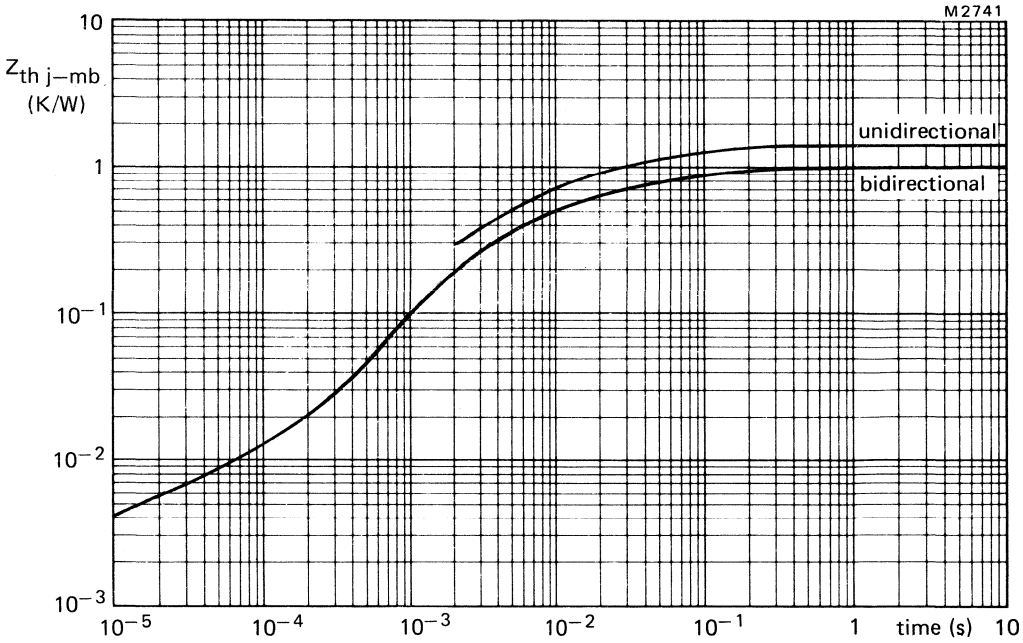

Fig.10 Transient thermal impedance.

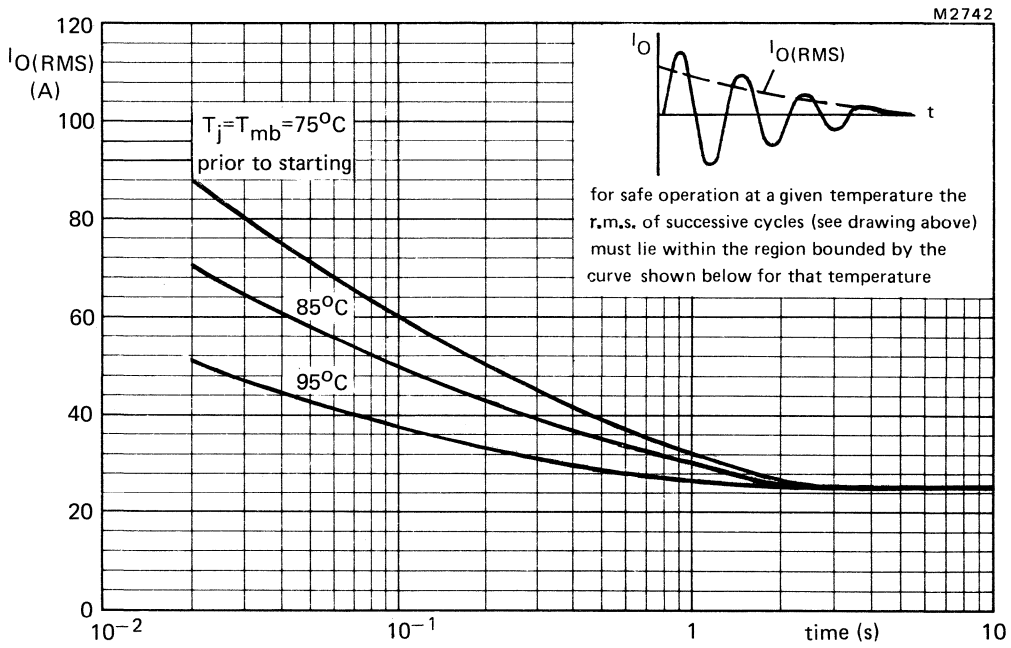

Fig.11 Limits for starting or inrush currents — full-cycle operation

FAST GATE TURN-OFF THYRISTORS

Thyristors in SOT-93 envelopes which are capable of being turned both on and off via the gate, and may be used with gate-assisted turn-off in anode-commutated circuits. They are suitable for use in resonant power supplies, high-frequency inverters, motor control etc. The devices have no reverse blocking capability; for reverse blocking operation use with a series diode, for reverse conducting operation use with an anti-parallel diode. The anode is connected to the mounting base.

QUICK REFERENCE DATA

			BTR59–800R	1300R	
Repetitive peak off-state voltage	V_{DRM}	max.	800	1300	V
Controllable anode current	I_{TCRM}	max.	50		A
Average on-state current	$I_{T(AV)}$	max.	10		A
Circuit commutated turn-off time	t_q	<	1.0		μs

MECHANICAL DATA

Dimensions in mm

Fig.1 SOT93; anode connected to mounting base.

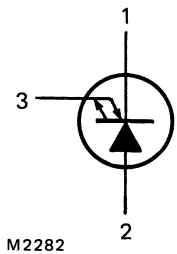

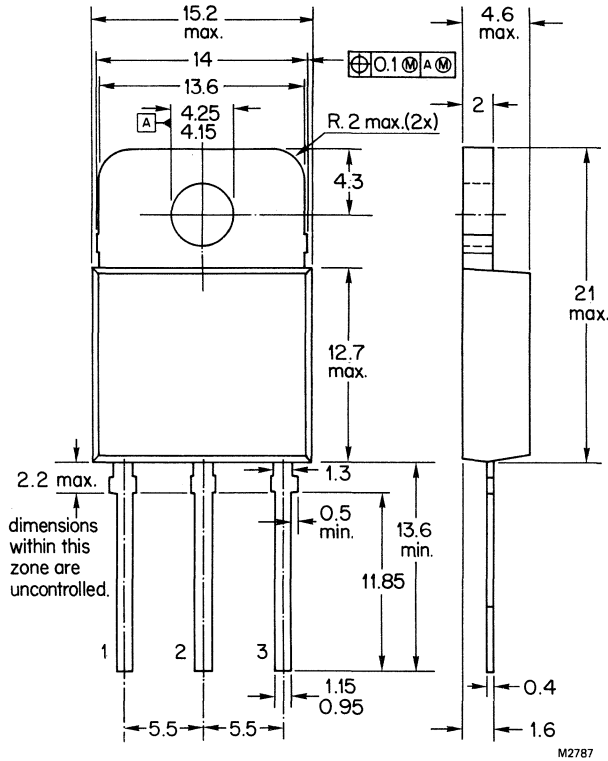

Accessories supplied on request; see data sheets Mounting instructions and accessories for SOT-93 envelopes.

RATINGS

Limiting values in accordance with the Absolute Maximum System (IEC134).

Anode to cathode			BTR59–800R	1300R	
Transient off-state voltage	V_{DSM}	max.	800	1300	V*
Repetitive peak off-state voltage	V_{DRM}	max.	800	1300	V*
Working off-state voltage	V_{DW}	max.	600	1000	V*
Continuous off-state voltage	V_D	max.	400	750	V*
Average on-state current (averaged over any 20 ms period) up to T_{mb} = 85 °C	$I_{T(AV)}$	max.	10		A
R.M.S. on-state current	$I_{T(RMS)}$	max.	16.5		A
Controllable anode current	I_{TCRM}	max.	50		A
Non-repetitive peak on-state current t = 10 ms; half-sinewave; T_j = 120 °C prior to surge	I_{TSM}	max.	100		A
I^2t for fusing; t = 10 ms	I^2t	max.	50		A^2s
Total power dissipation up to T_{mb} = 25 °C	P_{tot}	max.	105		W
Gate to cathode					
Repetitive peak current T_j = 120 °C prior to surge gate-cathode forward; t = 10 ms; half-sinewave	I_{GFM}	max.	25		A
gate-cathode reverse; t = 20 μs	I_{GRM}	max.	25		A
Average power dissipation (averaged over any 20 ms period)	$P_{G(AV)}$	max.	5.0		W
Temperatures					
Storage temperature	T_{stg}		−40 to +125		°C
Operating junction temperature	T_j	max.	120		°C

THERMAL RESISTANCE

From mounting base to heatsink; with heatsink compound	$R_{th\ mb\text{-}h}$	=	0.2	K/W
From junction to mounting base	$R_{th\ j\text{-}mb}$	=	0.9	K/W

*Measured with gate-cathode connected together.

CHARACTERISTICS

Anode to cathode

On-state voltage I_T = 10 A; I_G = 0.5 A; T_j = 120 °C	V_T	<	3.0	V*
Rate of rise of off-state voltage that will not trigger any off-state device; exponential method V_D = 2/3 V_{Dmax}; V_{GR} = 5 V; T_j = 120 °C	dV_D/dt	<	10	kV/μs
Rate of rise of off-state voltage that will not trigger any device following conduction, linear method I_T = 20 A; V_D = V_{DRMmax}; V_{GR} = 10 V; T_j = 120 °C	dV_D/dt	<	1.0	kV/μs
Off-state current V_D = V_{Dmax}; T_j = 120 °C	I_D	<	5.0	mA
Latching current; T_j = 25 °C	I_L	typ.	1.5	A**

Gate to cathode

Voltage that will trigger all devices V_D = 12 V; T_j = 25 °C	V_{GT}	>	1.5	V
Current that will trigger all devices V_D = 12 V; T_j = 25 °C	I_{GT}	>	500	mA
Minimum reverse breakdown voltage I_{GR} = 1.0 mA	$V_{(BR)GR}$	>	10	V

Switching characteristics (resistive load)

Turn-on when switched to I_T = 10 A from V_D = 250 V with I_{GF} = 2.5 A; T_j = 25 °C				
delay time	t_d	<	0.3	μs
rise time	t_r	<	1.5	μs

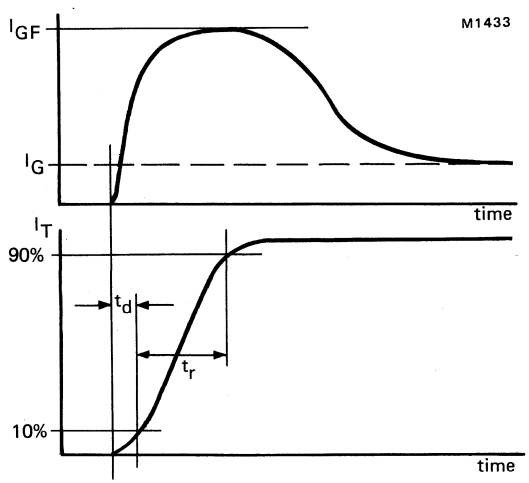

Fig.2 Waveforms.

*Measured under pulse conditions to avoid excessive dissipation.
**Below latching level the device behaves like a transistor with a gain dependent on current.

Switching characteristics (inductive load)

Turn-off when switched from I_T = 10 A to $V_D = V_{Dmax}$;

V_{GR} = 10 V; $L_G \leqslant 0.5\ \mu H$; $L_S \leqslant 0.25\ \mu H$; $C_S \geqslant 20$ nF; T_j = 85 °C

storage time	t_s	<	0.60	μs
fall time	t_f	<	0.25	μs
peak reverse gate current	I_{GR}	<	10	A

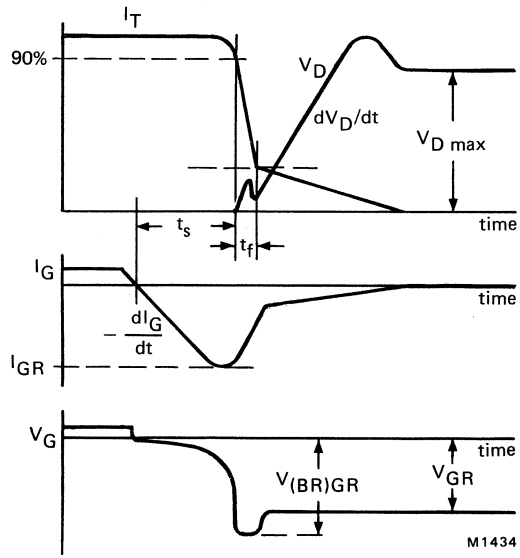

Fig.3 Waveforms.

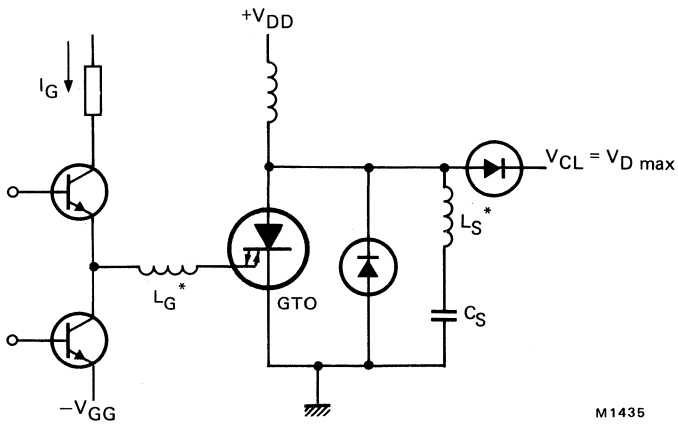

Fig.4 Inductive load test circuit.

*Indicates stray series inductance only.

Switching characteristics (circuit-commutated)*

Turn-off time I_T = 50 A; $-dI_T/dt$ = 10 A/μs; dV_D/dt = 200 V/μs; V_{GR} = 5 V; T_j = 120 °C	t_q	<	1.0	μs

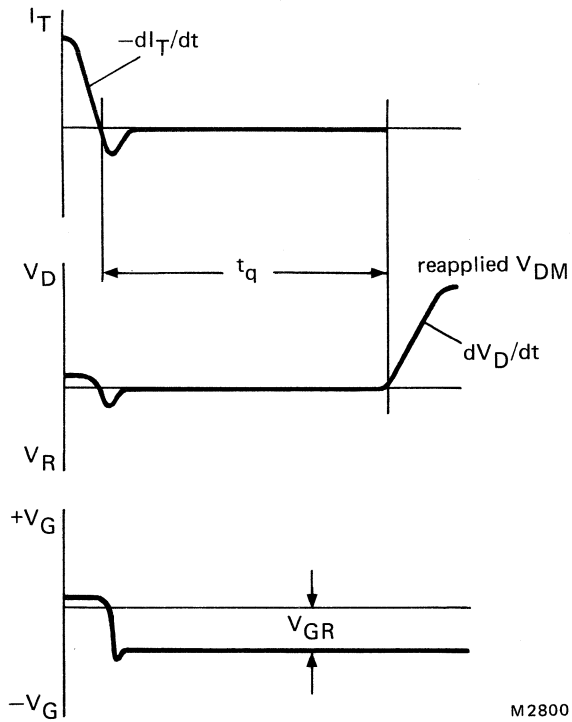

Fig.5 Circuit-commutated turn-off time definition.

*Figs. 7, 11, 12, 13, 15, 16, 17 do not apply to commutated turn-off.

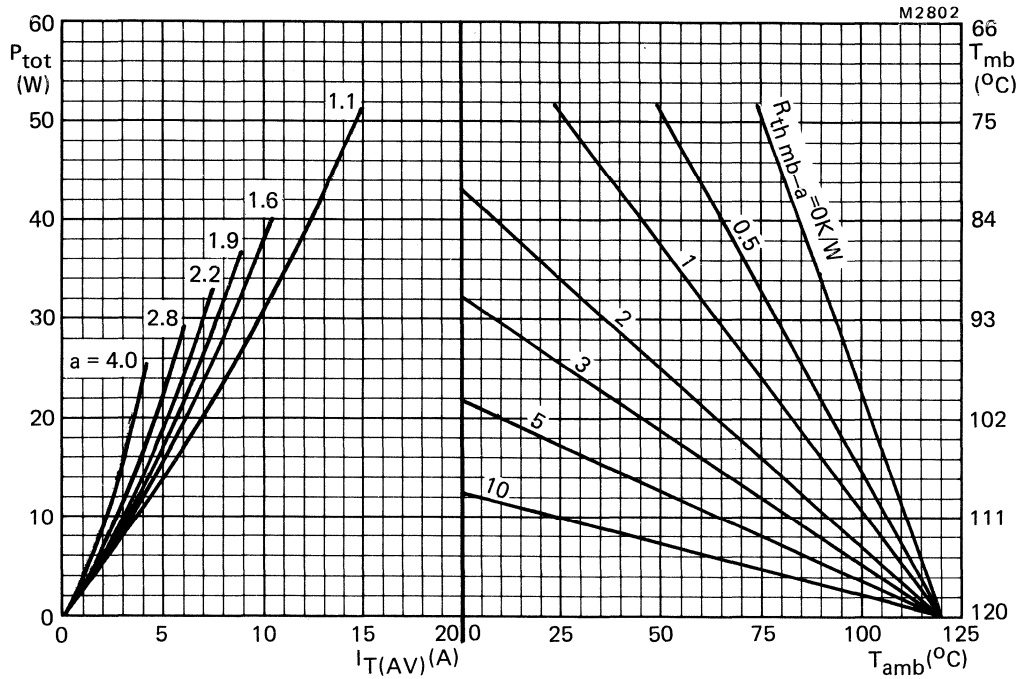

Fig.6 The right hand part shows the interrelationship between the power (derived from the left-hand part) and the maximum permissible temperatures.

$$a = \text{form factor} = \frac{I_{T(RMS)}}{I_{T(AV)}}$$

P = power excluding switching losses.

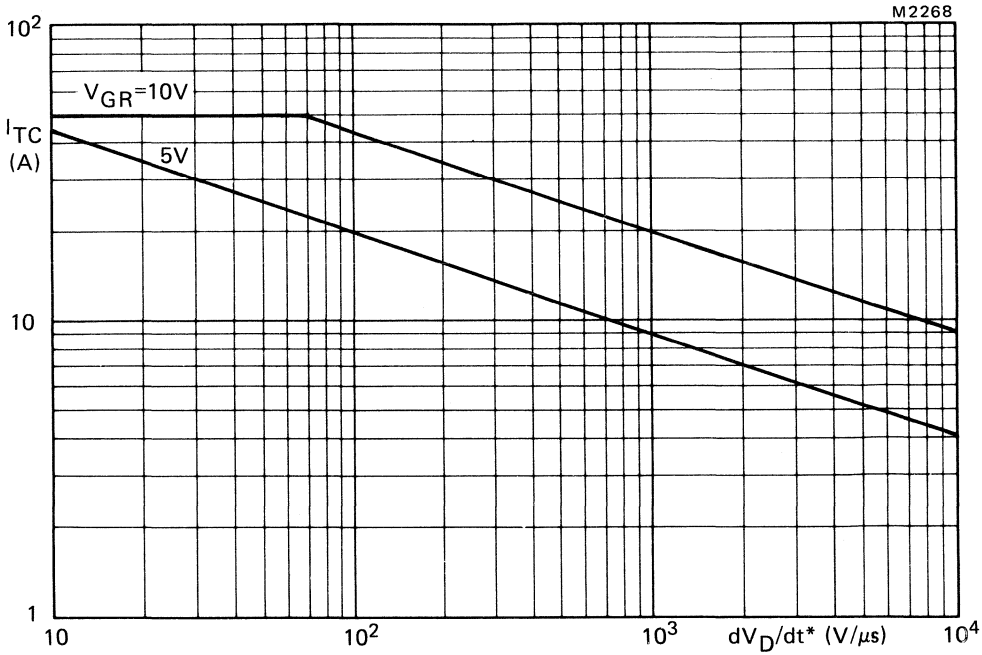

Fig.7 Anode current which can be turned off versus applied dV_D/dt^*; inductive load; $L_G \leqslant 0.5\ \mu H$; $L_S \leqslant 0.25\ \mu H$; T_j = 120 °C.

*dV_D/dt is calculated from I_T/C_S.

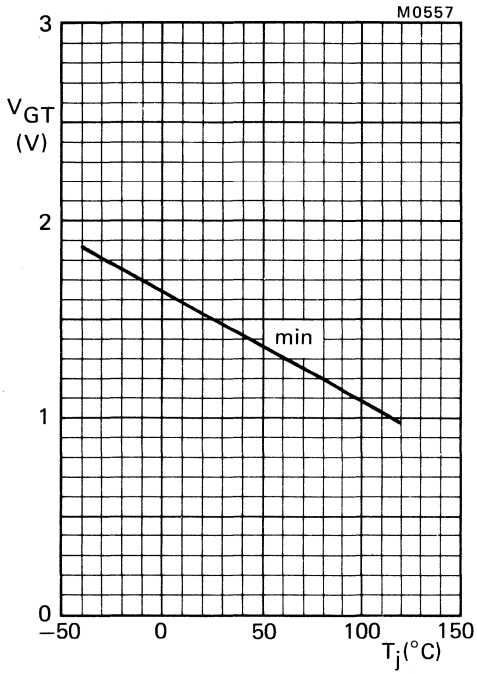

Fig.8 Minimum gate voltage that will trigger all devices as a function of junction temperature; V_D = 12 V.

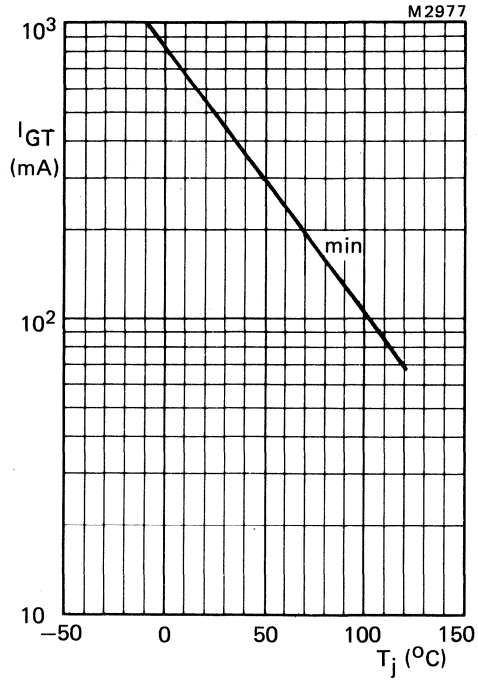

Fig.9 Minimum gate current that will trigger all devices as a function of junction temperature; V_D = 12 V.

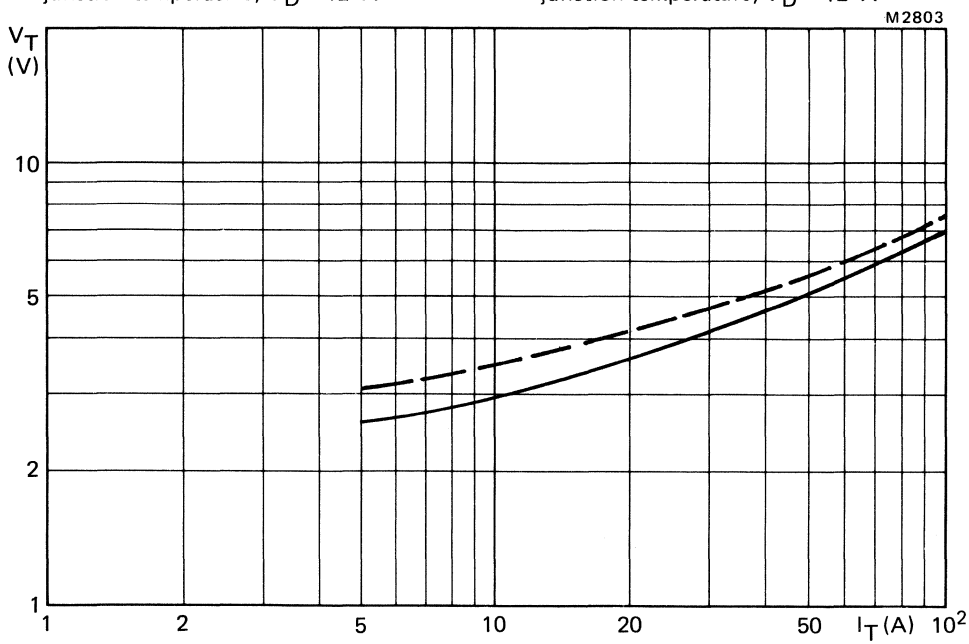

Fig.10 Maximum V_T versus I_T; – – – T_j = 25 °C; —— T_j = 120 °C; I_G = 0.5 A.

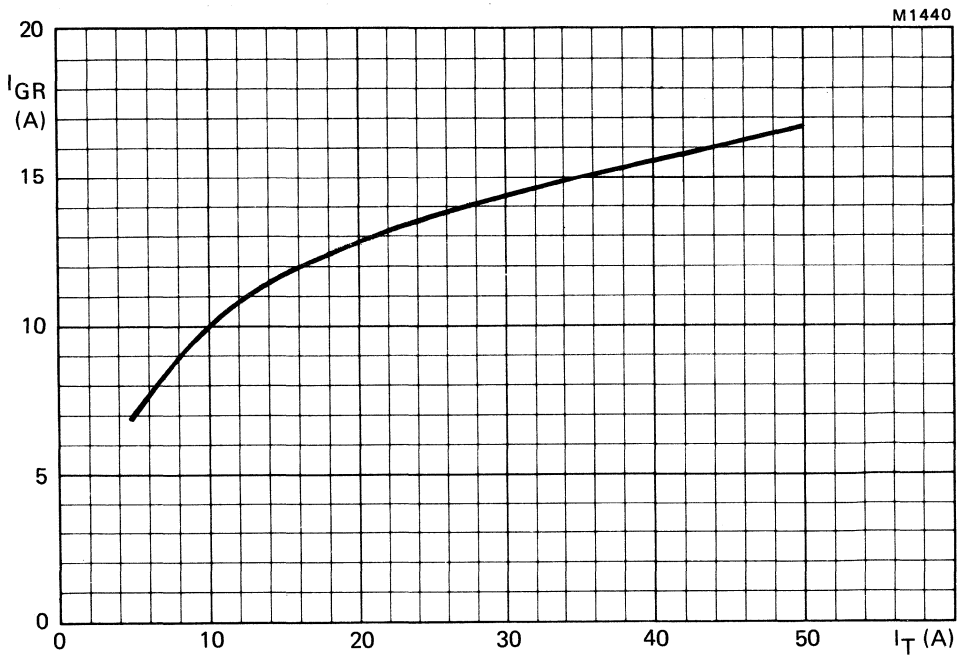

Fig.11 Peak reverse gate current versus anode current at turn-off; inductive load; V_{GR} = 10 V; I_G = 0.5 A; L_G = 0.4 μH; T_j = 120 °C; maximum values.

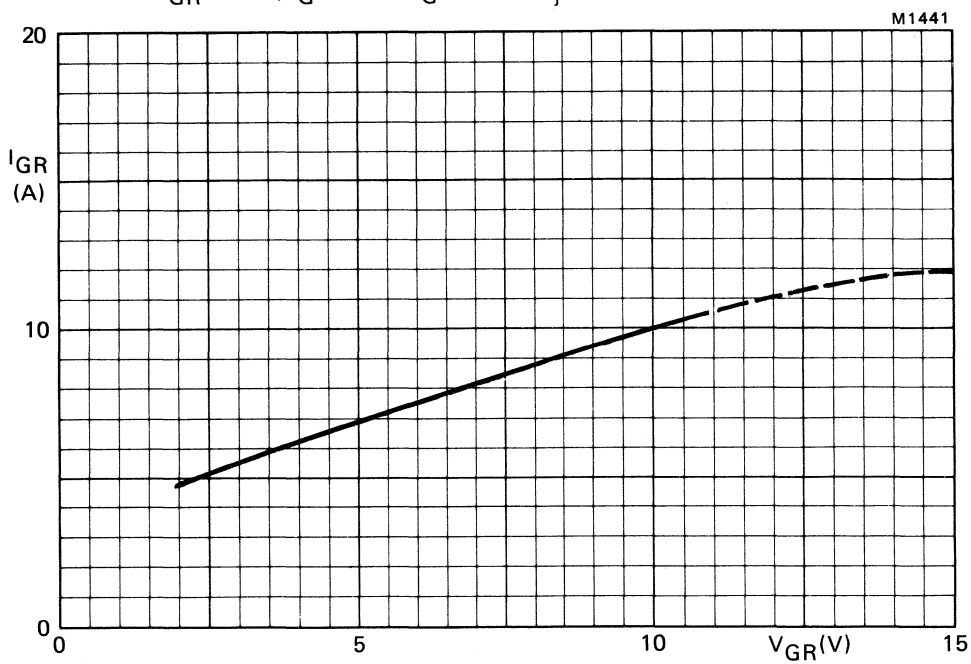

Fig.12 Peak reverse gate current versus applied reverse gate voltage; inductive load; I_T = 10 A; I_G = 0.5 A; L_G = 0.4 μH; T_j = 120 °C; maximum values.

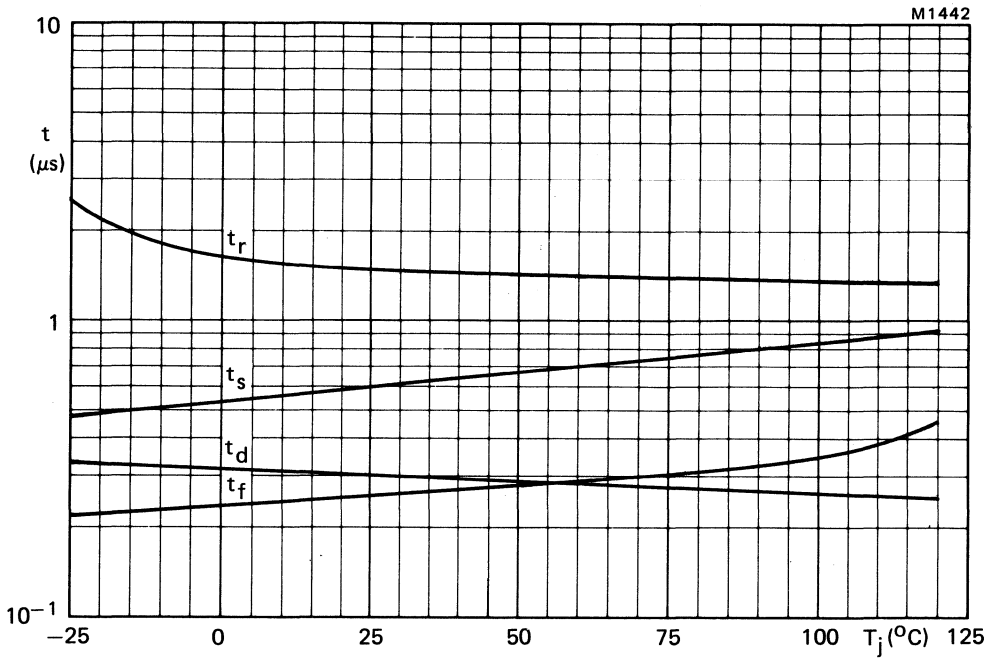

Fig.13 Switching times as a function of junction temperature; $V_D \geqslant 250$ V; $I_T = 10$ A; $I_{GF} = 1.0$ A; $V_{GR} = 10$ V; $I_G = 0.5$ A; $L_G = 0.4$ μH; maximum values.

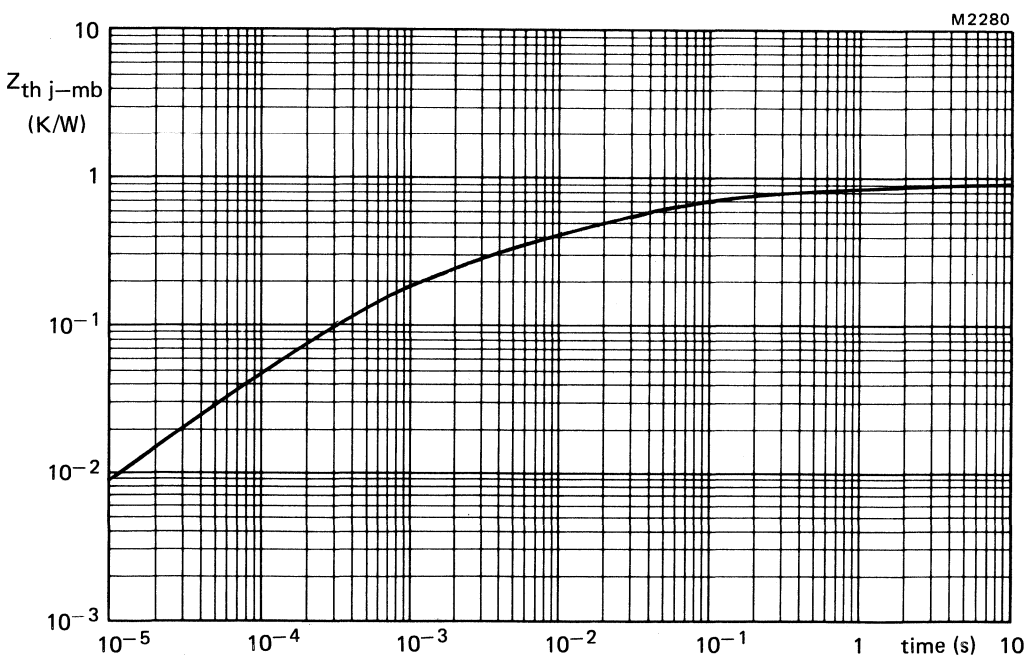

Fig.14 Transient thermal impedance.

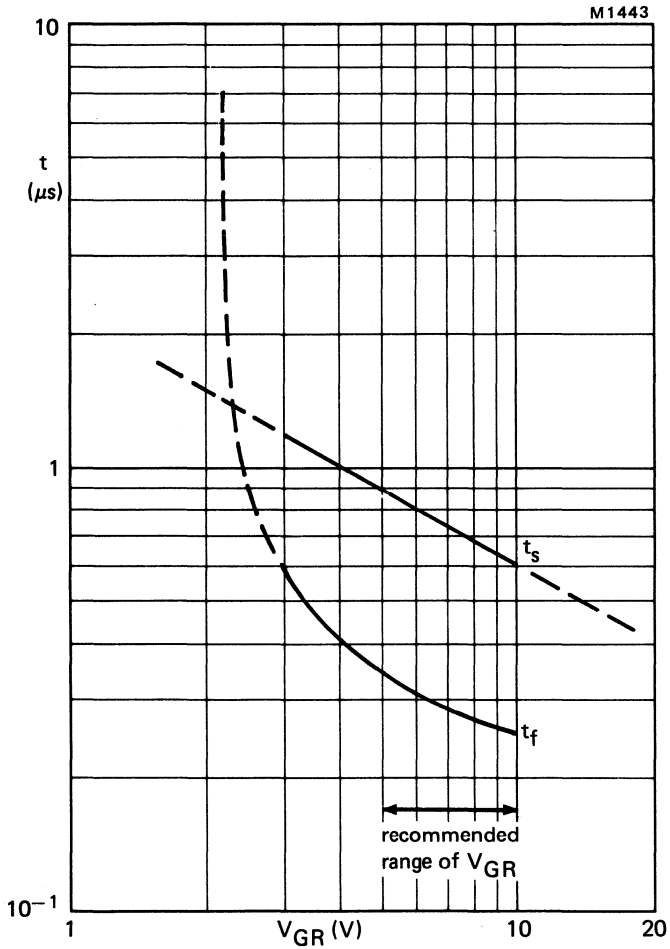

Fig.15 Storage and fall times versus applied reverse gate voltage; inductive load, I_T = 10 A; I_G = 0.5 A; L_G = 0.4 μH; T_j = 25 °C; maximum values.

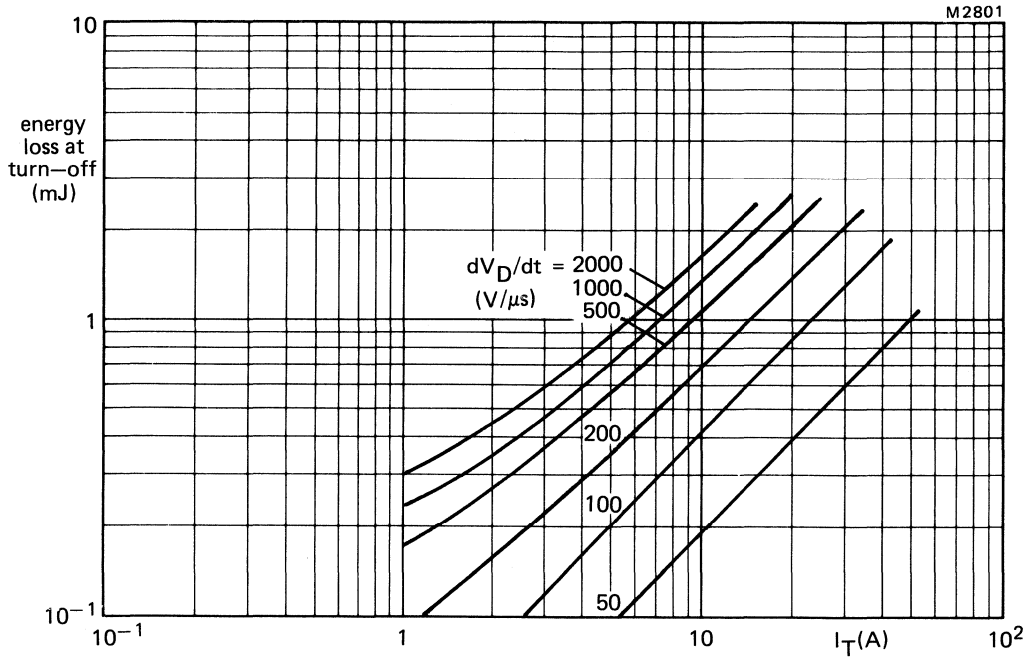

Fig.16 Maximum energy loss at turn-off (per cycle) as a function of anode current and applied dV_D/dt (calculated from I_T/C_S); dV_D/dt linear up to $V_D = V_{DWmax}$; V_{GR} = 10 V; I_G = 0.5 A; $L_G < 0.5$ μH; $L_S < 0.25$ μH; T_j = 120 °C.

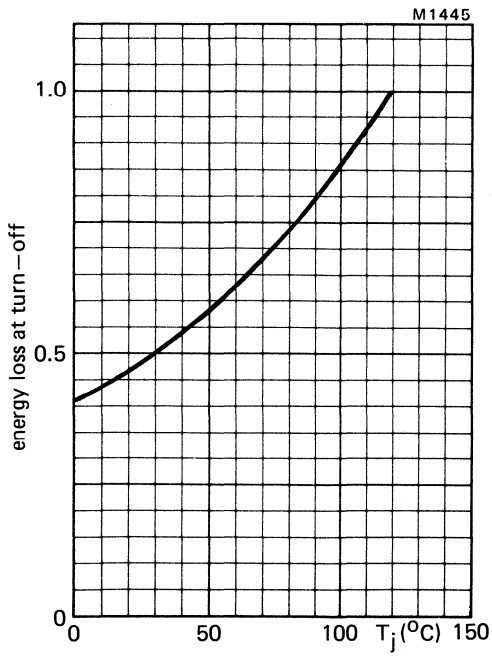

Fig.17 Energy loss at turn-off as a function of junction temperature; I_G = 0.5 A; V_{GR} = 10 V. Normalised to T_j = 120 °C.

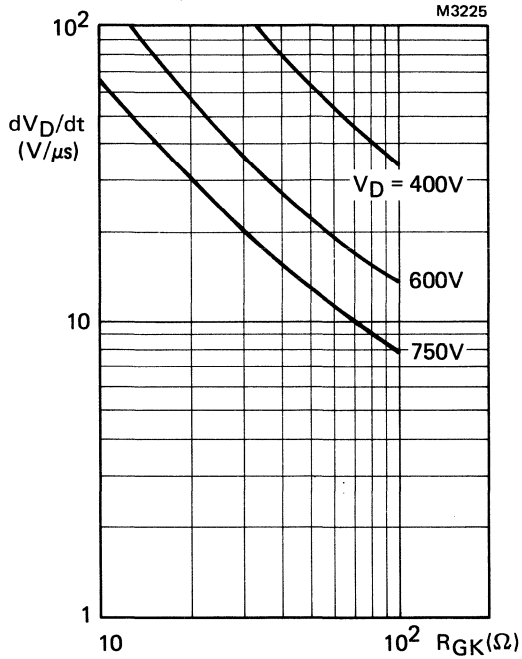

Fig.18 Linear rate of rise of off-state voltage versus gate-cathode resistance; T_j = 25 °C; typical values.

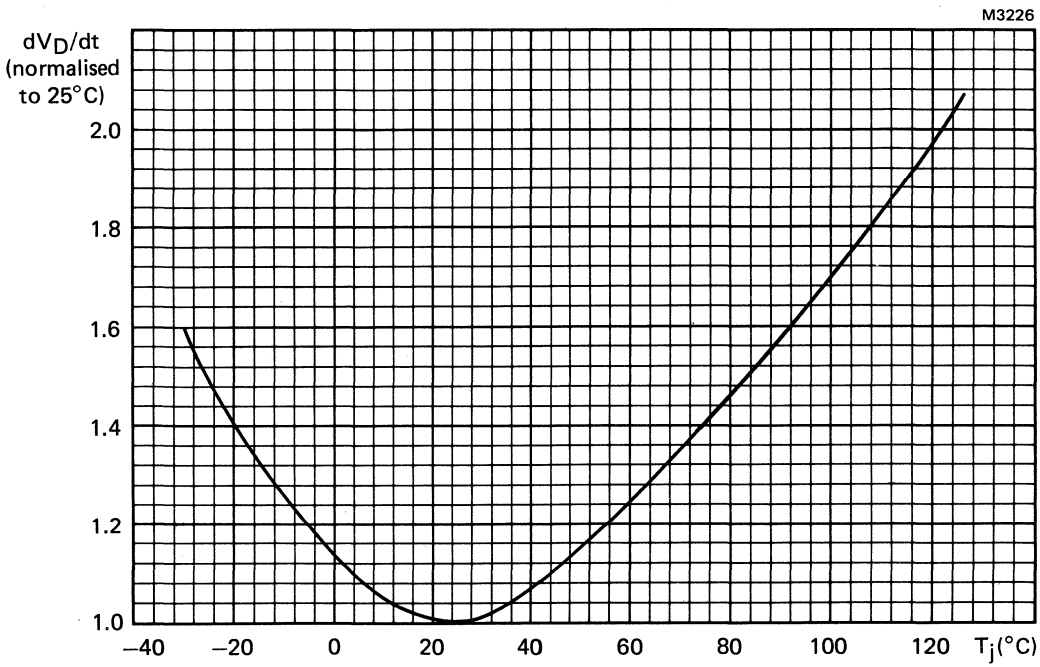

Fig.19 Rate of rise of off-state voltage versus junction temperature, normalised to 25 °C; V_{Dmax} = 750V; R_{GK} = 22 Ω; typical values.

FAST GATE TURN-OFF THYRISTORS

Thyristors in SOT-93 envelopes capable of being turned both on and off via the gate. They are suitable for use in high-frequency inverters, power supplies, motor control etc. The devices have no reverse blocking capability; for reverse blocking operation use with a series diode, for reverse conducting operation use with an anti-parallel diode. The anode is connected to the mounting base.

QUICK REFERENCE DATA

			BTS59-850R	1000R	1200R	
Repetitive peak off-state voltage	V_{DRM}	max.	850	1000	1200	V
Non-repetitive peak on-state current	I_{TSM}	max.		100		A
Controllable anode current	I_{TCRM}	max.		50		A
Average on-state current	$I_{T(AV)}$	max.		15		A
Fall time	t_f	<		250		ns

MECHANICAL DATA

Dimensions in mm

Fig.1 SOT-93; anode connected to mounting base

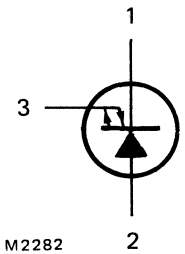

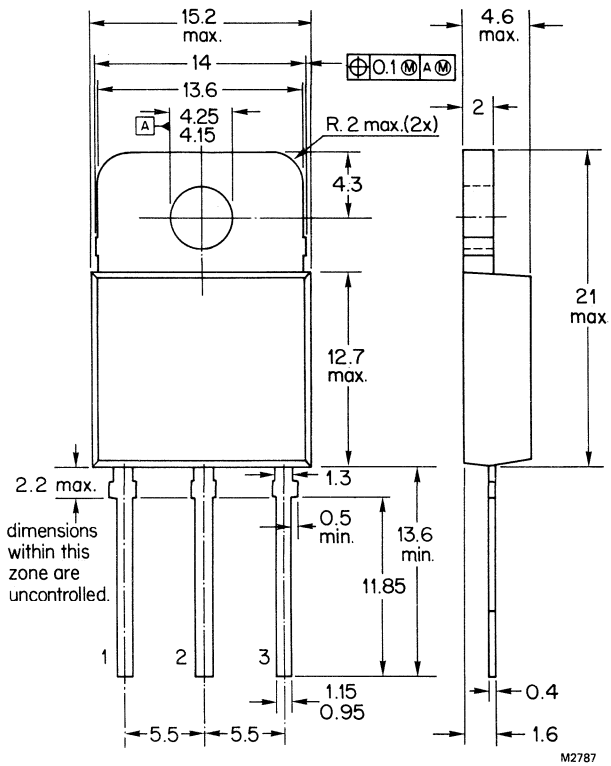

Accessories supplied on request: see data sheets Mounting instructions and accessories for SOT-93 envelopes.

RATINGS

Limiting values in accordance with the Absolute Maximum System (IEC134)

Anode to cathode			BTS59-850R	1000R	1200R	
Transient off-state voltage	V_{DSM}	max.	1000	1100	1300	V*
Repetitive peak off-state voltage	V_{DRM}	max.	850	1000	1200	V*
Working off-state voltage	V_{DW}	max.	600	800	1000	V*
Continuous off-state voltage	V_D	max.	500	650	750	V*
Average on-state current (averaged over any 20 ms period) up to T_{mb} = 85 °C	$I_{T(AV)}$	max.		15		A
Controllable anode current	I_{TCRM}	max.		50		A
Non-repetitive peak on-state current t = 10 ms; half-sinewave; T_j = 120 °C prior to surge	I_{TSM}	max.		100		A
I^2t for fusing; t = 10 ms	I^2t	max.		50		A^2s
Total power dissipation up to T_{mb} = 25 °C	P_{tot}	max.		105		W
Gate to cathode						
Repetitive peak current T_j = 120 °C prior to surge gate-cathode forward; t = 10 ms; half-sinewave	I_{GFM}	max.		25		A
gate-cathode reverse; t = 20 μs	I_{GRM}	max.		25		A
Average power dissipation (averaged over any 20 ms period)	$P_{G(AV)}$	max.		5.0		W
Temperatures						
Storage temperature	T_{stg}			−40 to +125		°C
Operating junction temperature	T_j	max.		120		°C

THERMAL RESISTANCE

From mounting base to heatsink; with heatsink compound	$R_{th\ mb\text{-}h}$	=	0.2	K/W
From junction to mounting base	$R_{th\ j\text{-}mb}$	=	0.9	K/W

* Measured with gate-cathode connected together.

CHARACTERISTICS

Anode to cathode

On-state voltage I_T = 10 A; I_G = 0.5 A; T_j = 120 °C	V_T	<	2.3	V*
Rate of rise of off-state voltage that will not trigger any off-state device; exponential method V_D = 2/3 V_{Dmax}; V_{GR} = 5 V; T_j = 120 °C	dV_D/dt	<	10	kV/μs
Rate of rise of off-state voltage that will not trigger any device following conduction, linear method I_T = 20 A; V_D = V_{DRMmax}; V_{GR} = 10 V; T_j = 120 °C	dV_D/dt	<	1.0	kV/μs
Off-state current V_D = V_{Dmax}; T_j = 120 °C	I_D	<	5.0	mA
Latching current; T_j = 25 °C	I_L	typ.	1.5	A**

Gate to cathode

Voltage that will trigger all devices V_D = 12 V; T_j = 25 °C	V_{GT}	>	1.5	V
Current that will trigger all devices V_D = 12 V, T_j = 25 °C	I_{GT}	>	300	mA
Minimum reverse breakdown voltage I_{GR} = 1.0 mA	$V_{(BR)GR}$	>	10	V

Switching characteristics (resistive load)

Turn-on when switched to I_T = 10 A from V_D = 250 V with I_{GF} = 1.5 A; T_j = 25 °C				
delay time	t_d	<	0.3	μs
rise time	t_r	<	1.5	μs

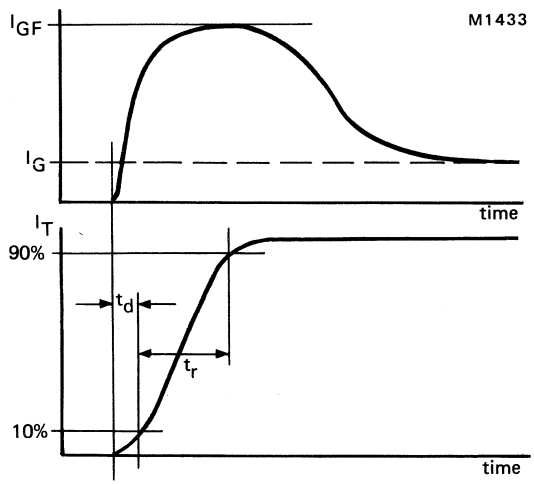

Fig.2 Waveforms

* Measured under pulse conditions to avoid excessive dissipation.

** Below latching level the device behaves like a transistor with a gain dependent on current.

Switching characteristics (inductive load)

Turn-off when switched from I_T = 10 A to $V_D = V_{Dmax}$;

V_{GR} = 10 V; $L_G \leqslant 0.5\ \mu H$; $L_S \leqslant 0.25\ \mu H$; $C_S \geqslant 20$ nF; T_j = 25 °C

storage time	t_s	<	0.60	μs
fall time	t_f	<	0.25	μs
peak reverse gate current	I_{GR}	<	10	A

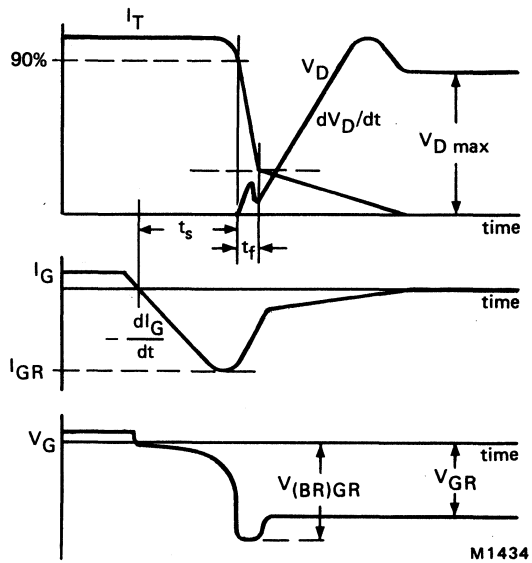

Fig.3 Waveforms.

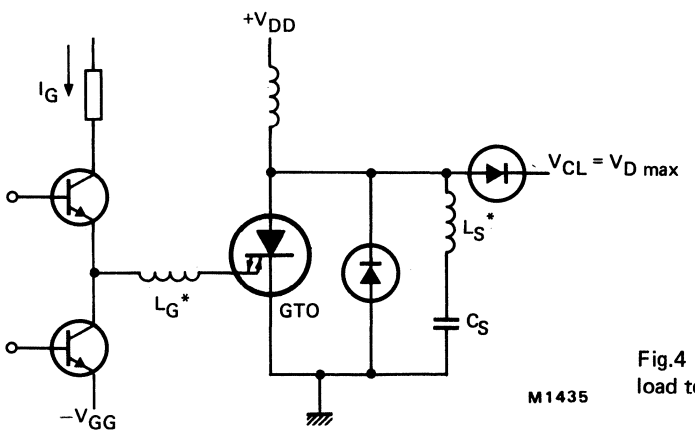

Fig.4 Inductive load test circuit.

*Indicates stray series inductance only

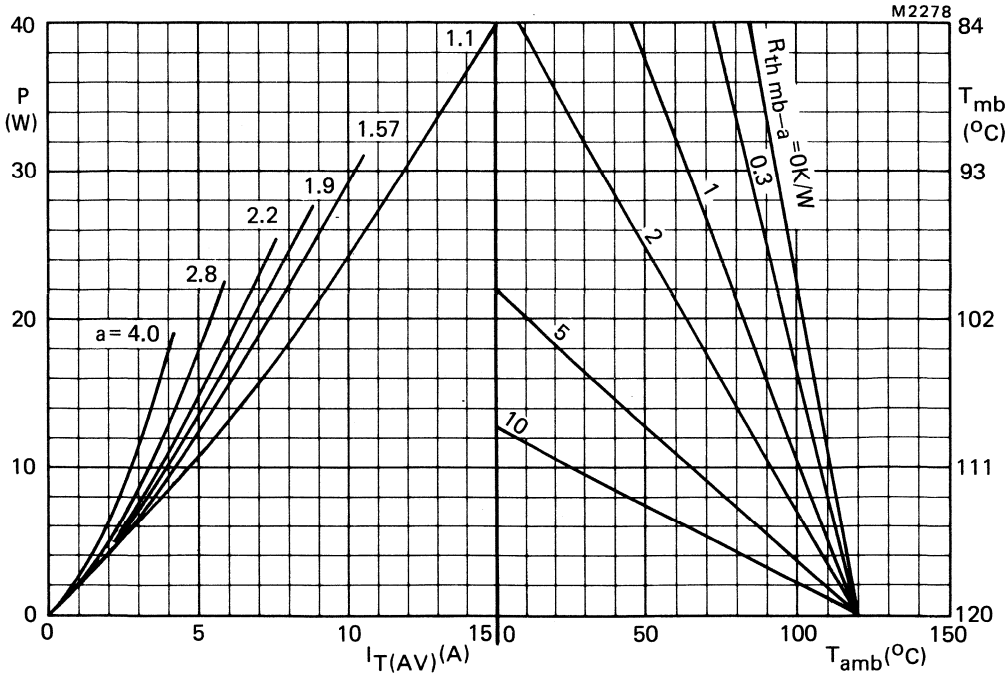

Fig.5 The right hand part shows the interrelationship between the power (derived from the left-hand part) and the maximum permissible temperatures.

$$a = \text{form factor} = \frac{I_{T(RMS)}}{I_{T(AV)}}$$

P = power excluding switching losses.

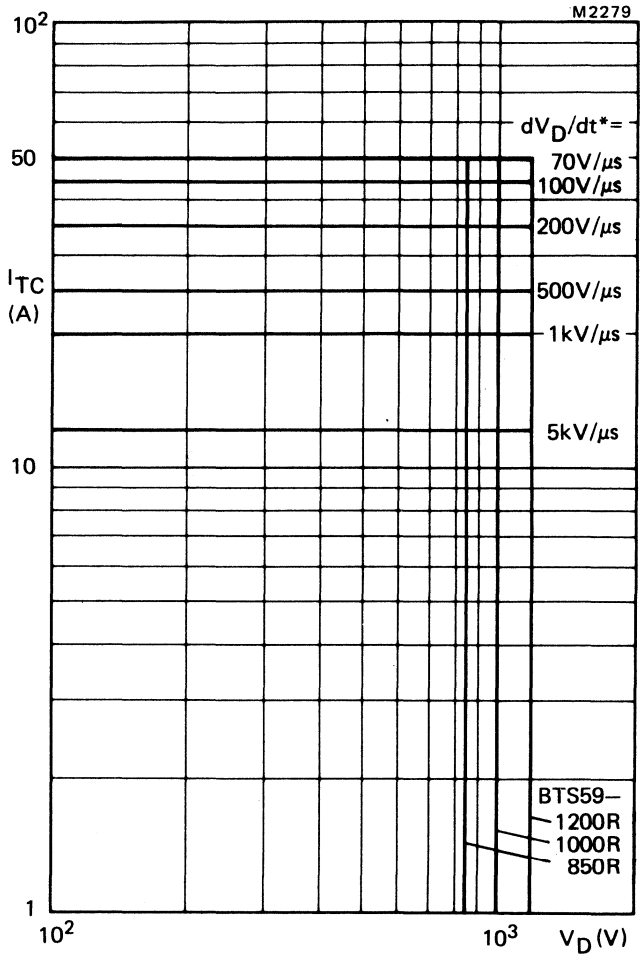

Fig.6 Anode current which can be turned off versus anode voltage; inductive load; V_{GR} = 10 V; $L_G \leqslant 0.5$ μH; $L_S \leqslant 0.25$ μH; T_j = 120 °C.
*dV_D/dt is calculated from I_T/C_S.

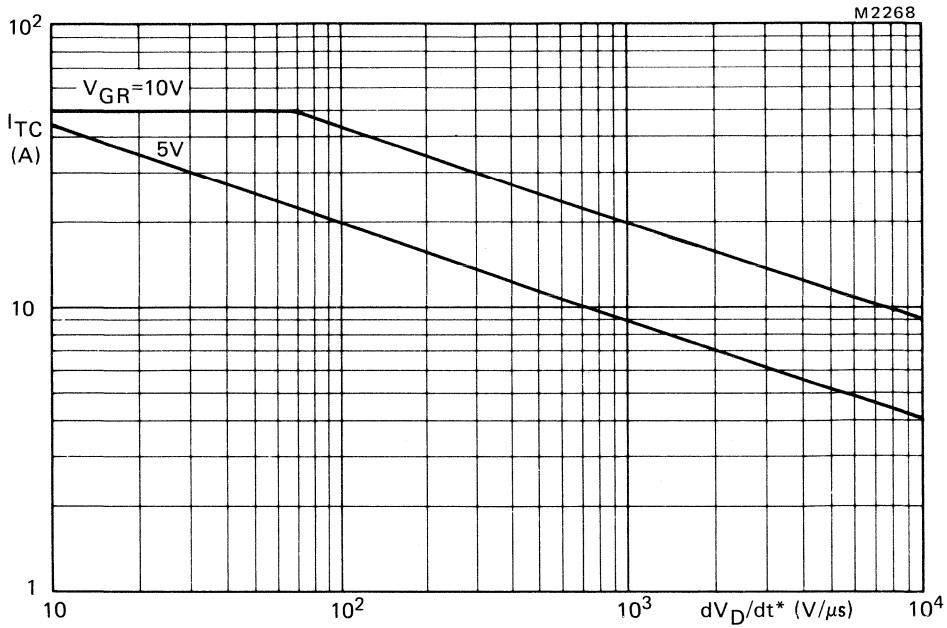

Fig.7 Anode current which can be turned off versus applied dV_D/dt^*; inductive load; $L_G \leqslant 0.5\ \mu H$; $L_S \leqslant 0.25\ \mu H$; $T_j = 120\ ^oC$. $^*dV_D/dt$ is calculated from I_T/C_S.

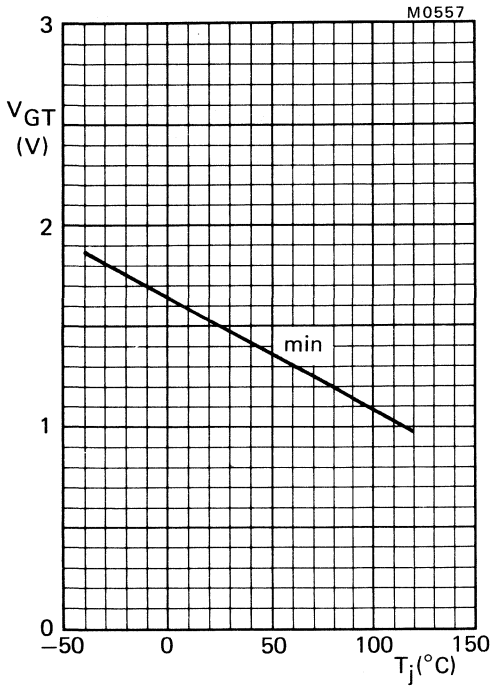

Fig.8 Minimum gate voltage that will trigger all devices as a function of junction temperature; V_D = 12 V.

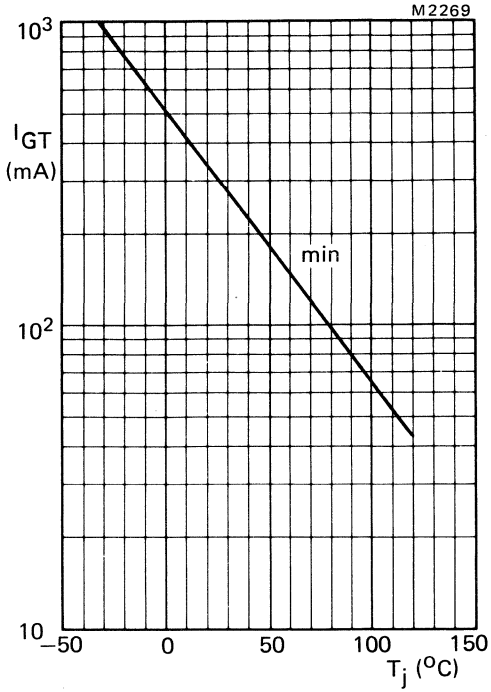

Fig.9 Minimum gate current that will trigger all devices as a function of junction temperature; V_D = 12 V.

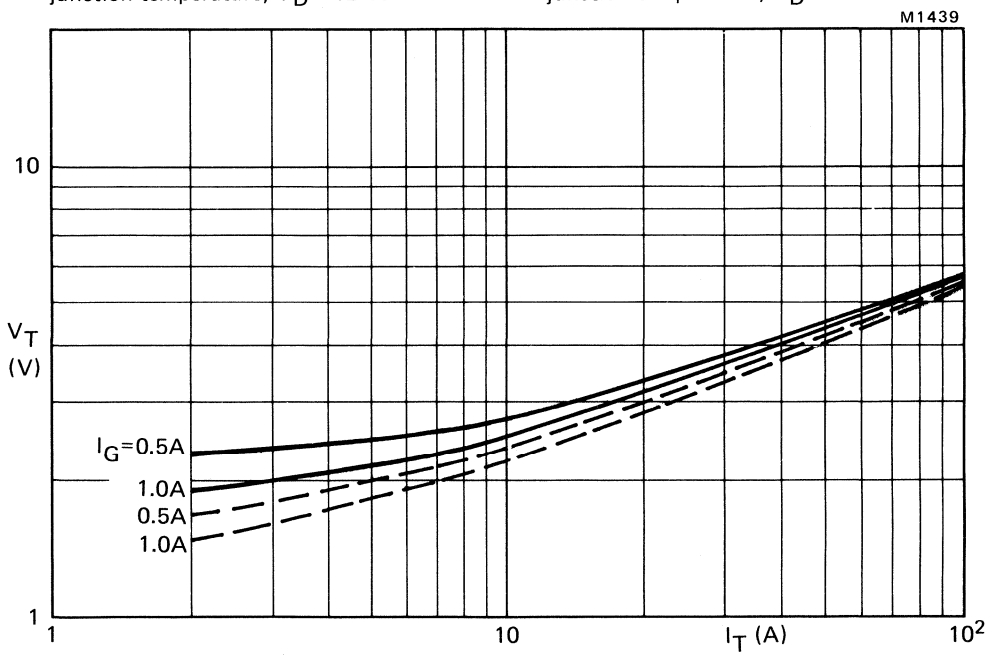

Fig.10 Maximum V_T versus I_T; ——— T_j = 25 °C; – – – – T_j = 120 °C.

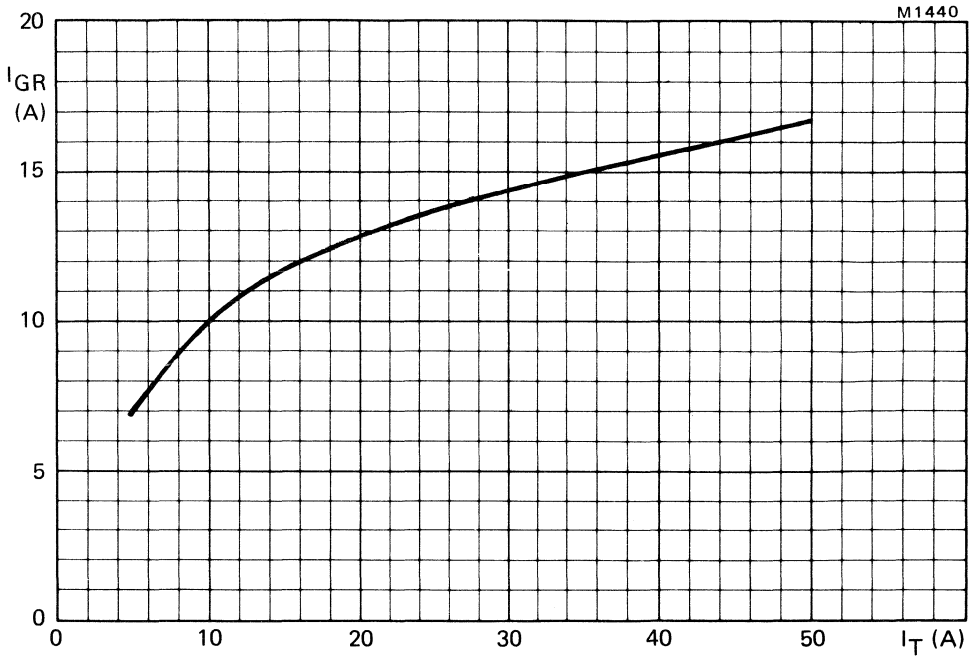

Fig.11 Peak reverse gate current versus anode current at turn-off; inductive load; V_{GR} = 10 V; I_G = 0.5 A; L_G = 0.4 μH; T_j = 120 °C; maximum values.

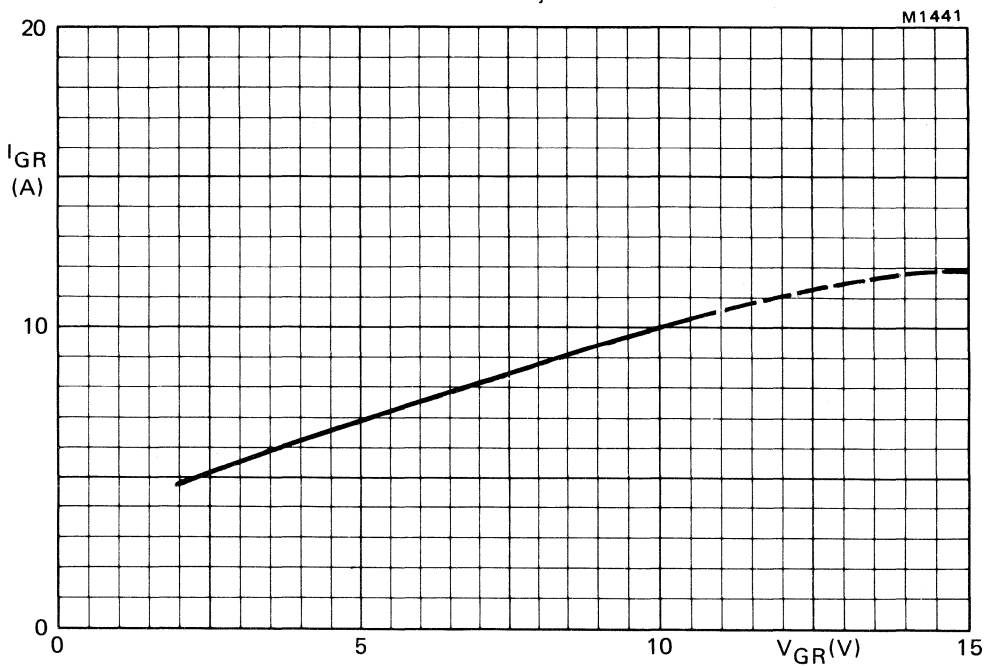

Fig.12 Peak reverse gate current versus applied reverse gate voltage; inductive load; I_T = 10 A; I_G = 0.5 A; L_G = 0.4 μH; T_j = 120 °C; maximum values.

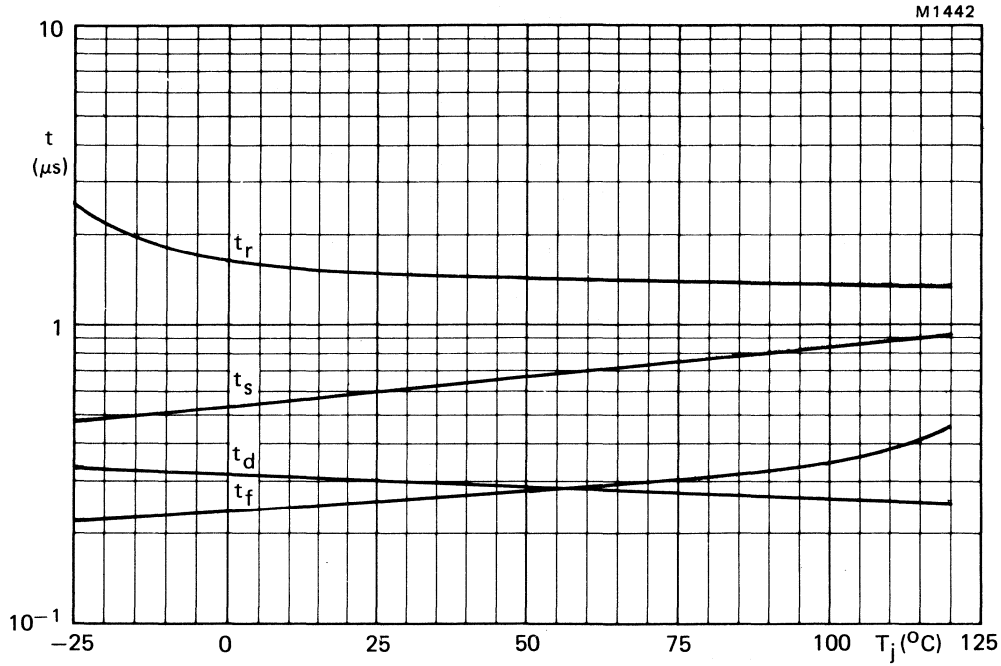

Fig.13 Switching times as a function of junction temperature; $V_D \geqslant 250$ V; $I_T = 10$ A; $I_{GF} = 1.0$ A; $V_{GR} = 10$ V; $I_G = 0.5$ A; $L_G = 0.4$ μH; maximum values.

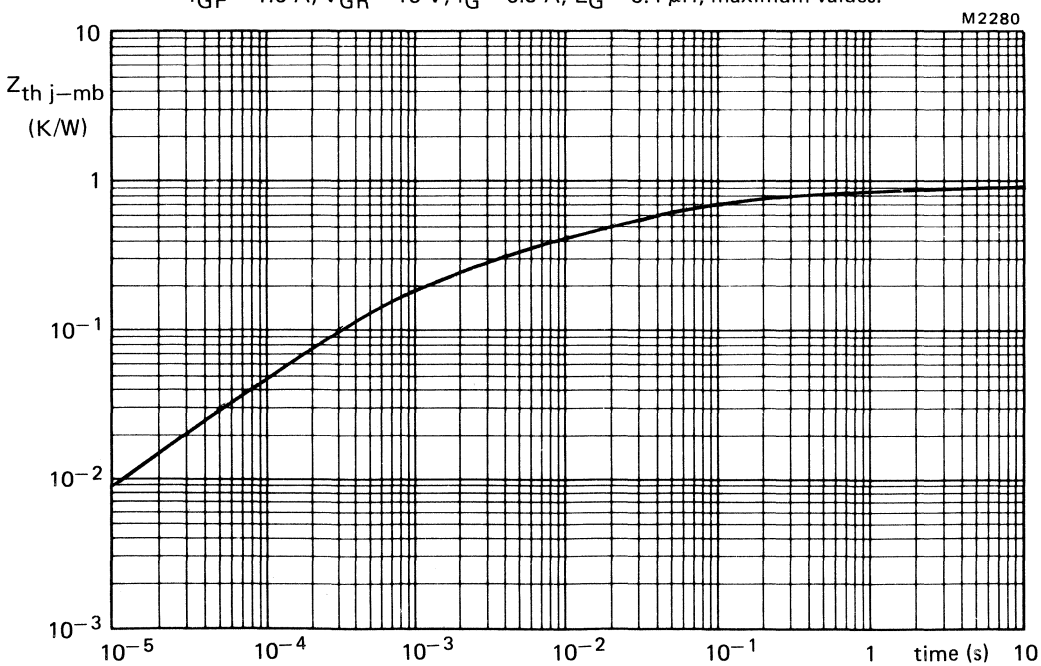

Fig.14 Transient thermal impedance.

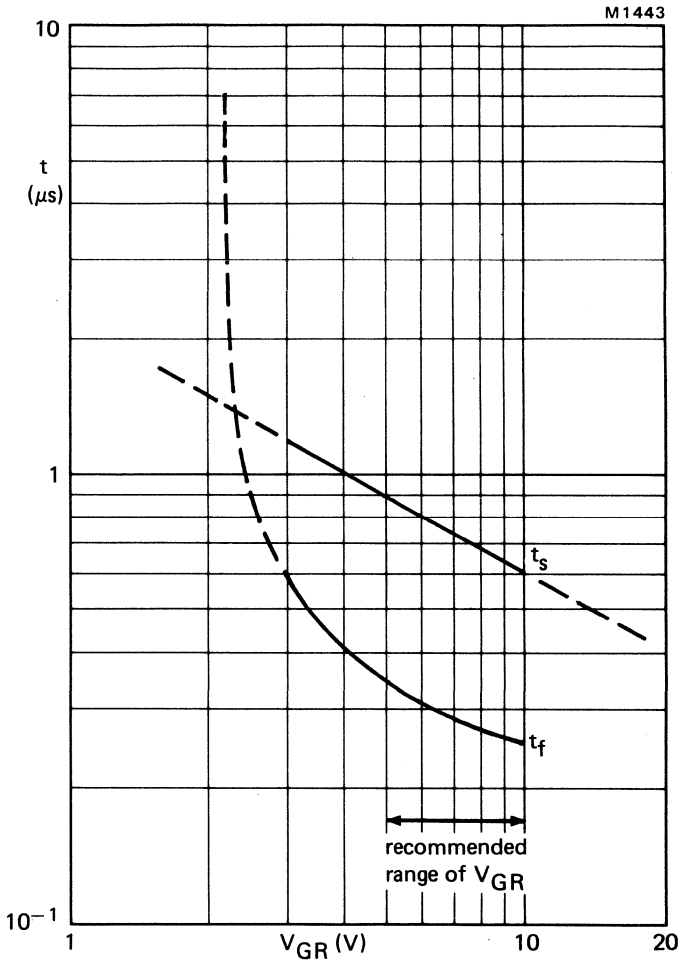

Fig.15 Storage and fall times versus applied reverse gate voltage; inductive load; I_T = 10 A; I_G = 0.5 A; L_G = 0.4 μH; T_j = 25 °C; maximum values.

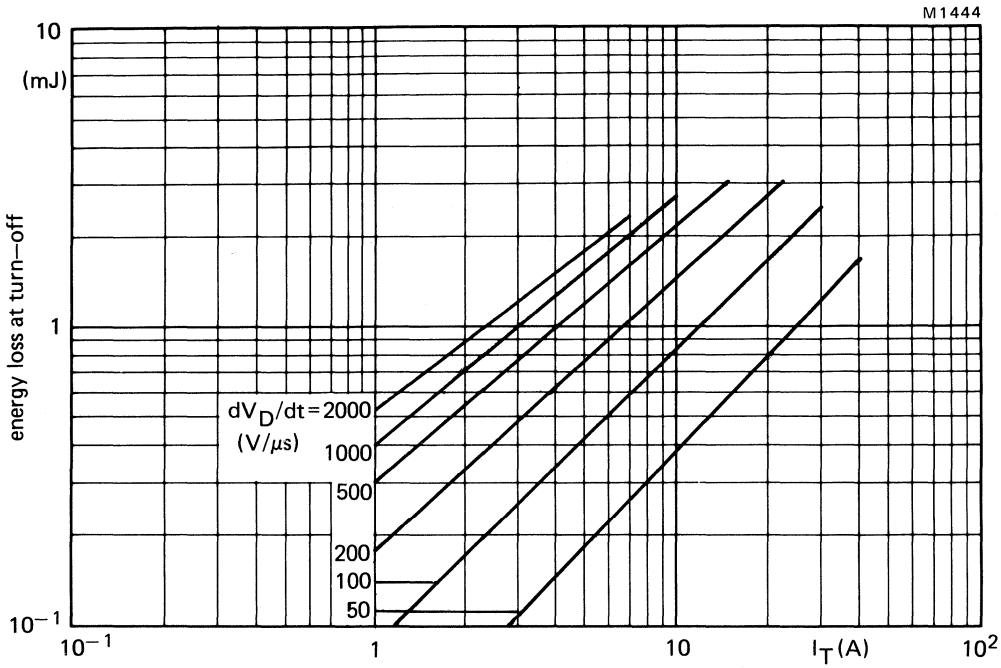

Fig.16 Maximum energy loss at turn-off (per cycle) as a function of anode current and applied dV_D/dt (calculated from I_T/C_S); dV_D/dt linear up to V_{Dmax} = 600 V; V_{GR} = 10 V; I_G = 0.5 A; $L_G \leqslant 0.5$ μH; $L_S \leqslant 0.25$ μH; T_j = 120 °C.

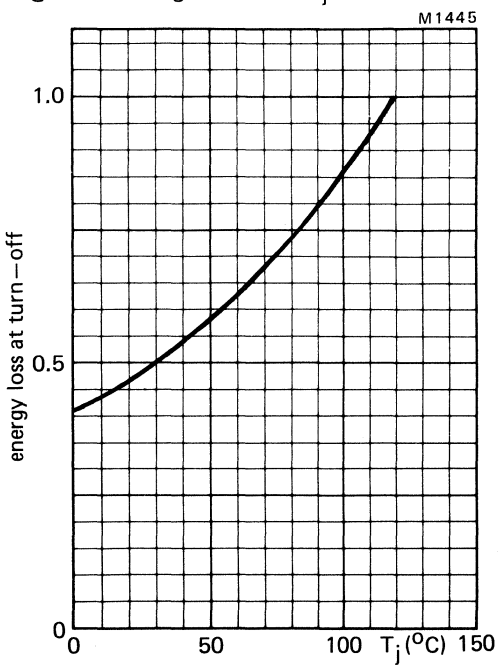

Fig.17 Energy loss at turn off as a function of junction temperature; I_G = 0.5 A; V_{GR} = 10 V. Normalised to T_j = 120 °C.

FAST GATE TURN-OFF THYRISTORS

Thyristors in TO-220AB envelopes capable of being turned both on and off via the gate. They are suitable for use in high-frequency inverters, power supplies, motor control etc. The devices have no reverse blocking capability. For reverse blocking operation use with a series diode, for reverse conducting operation use with an anti parallel diode.

QUICK REFERENCE DATA

			BTV58–600R	850R	1000R	
Repetitive peak off-state voltage	V_{DRM}	max.	600	850	1000	V
Non-repetitive peak on-state current	I_{TSM}	max.	75			A
Controllable anode current	I_{TCRM}	max.	25			A
Average on-state current	$I_{T(AV)}$	max.	10			A
Fall time	t_f	max.	250			ns

MECHANICAL DATA

Dimensions in mm

Fig.1 TO-220AB.

Pinning:
1 = Cathode
2 = Anode
3 = Gate

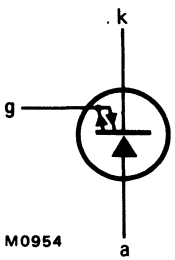

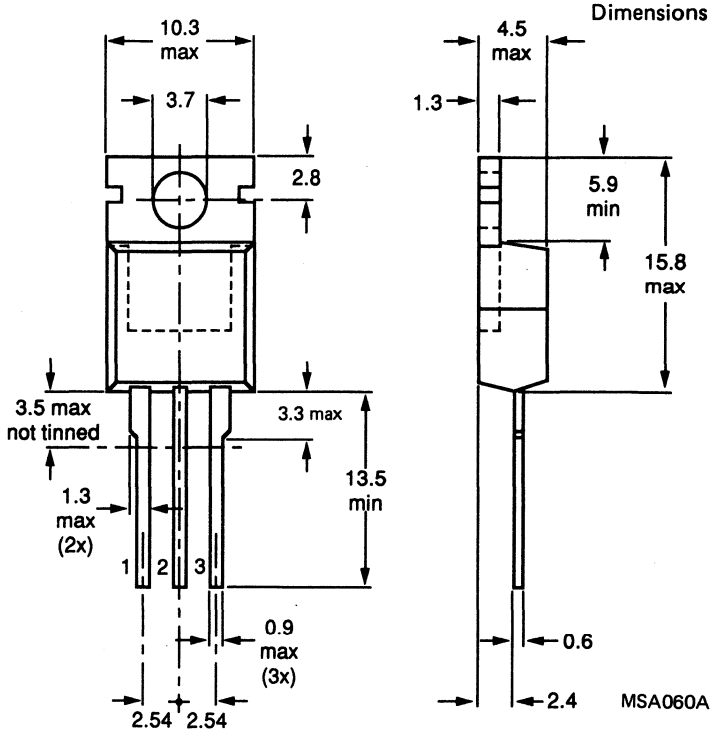

Net mass: 2 g

Note: The exposed metal mounting base is directly connected to the anode.

Accessories supplied on request: see data sheets Mounting instructions and accessories for TO-220 envelopes.

RATINGS

Limiting values in accordance with the Absolute Maximum System (IEC 134)

Anode to cathode			BTV58-600R	850R	1000R	
Transient off-state voltage*	V_{DSM}	max.	750	1000	1100	V
Repetitive peak off-state voltage*	V_{DRM}	max.	600	850	1000	V
Working off-state voltage*	V_{DW}	max.	400	600	800	V
Continuous off-state voltage*	V_D	max.	400	500	650	V
Average on-state current (averaged over any 20 ms period) up to T_{mb} = 80 °C	$I_{T(AV)}$	max.		10		A
Controllable anode current	I_{TCRM}	max.		25		A
Non-repetitive peak on-state current t = 10 ms; half-sinewave; T_j = 120 °C prior to surge	I_{TSM}	max.		75		A
I^2t for fusing; t = 10 ms	I^2t	max.		28		A^2s
Total power dissipation up to T_{mb} = 25 °C	P_{tot}	max.		65		W
Gate to cathode						
Repetitive peak on-state current T_j = 120 °C prior to surge						
gate-cathode forward; t = 10 ms; half-sinewave	I_{GFM}	max.		25		A
gate-cathode reverse; t = 20 μs	I_{GRM}	max.		25		A
Average power dissipation (averaged over any 20 ms period)	$P_{G(AV)}$	max.		2,5		W
Temperatures						
Storage temperature	T_{stg}			−40 to + 150		°C
Operating junction temperature	T_j	max.		120		°C

THERMAL RESISTANCE

From junction to mounting base	$R_{th\ j\text{-}mb}$	=	1,5	K/W
From mounting base to heatsink with heatsink compound	$R_{th\ mb\text{-}h}$	=	0,3	K/W
with 56367 alumina insulator and heatsink compound (clip-mounted)	$R_{th\ mb\text{-}h}$	=	0,8	K/W

* Measured with gate connected to cathode.

CHARACTERISTICS

Anode to cathode

On-state voltage I_T = 5 A; I_G = 0.2 A; T_j = 120 °C	V_T	<	1.8	V*
Rate of rise of off-state voltage that will not trigger any off-state device; exponential method V_D = 2/3 V_{Dmax}; V_{GR} = 5 V; T_j = 120 °C	dV_D/dt	<	10	kV/µs
Rate of rise of off-state voltage that will not trigger any device following conduction, linear method I_T = 5 A; V_D = V_{DRMmax}; V_{GR} = 10 V; T_j = 120 °C	dV_D/dt	<	1.5	kV/µs
Off-state current V_D = V_{Dmax}; T_j = 120 °C	I_D	<	3.0	mA
Latching current; T_j = 25 °C	I_L	typ.	1.0	A**

Gate to cathode

Voltage that will trigger all devices V_D = 12 V; T_j = 25 °C	V_{GT}	>	1.5	V
Current that will trigger all devices V_D = 12 V; T_j = 25 °C	I_{GT}	>	200	mA
Minimum reverse breakdown voltage I_{GR} = 1.0 mA	$V_{(BR)GR}$	>	10	V

Switching characteristics (resistive load)

Turn-on when switched to I_T = 5 A from V_D = 250 V with I_{GF} = 0.5 A; T_j = 25 °C				
delay time	t_d	<	0.25	µs
rise time	t_r	<	1.0	µs

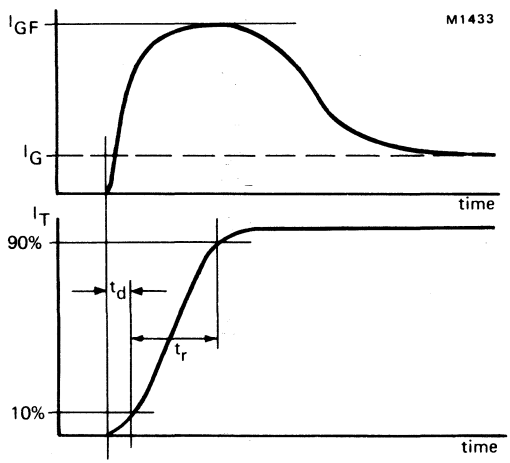

Fig.2 Waveforms

* Measured under pulse conditions to avoid excessive dissipation.

** Below latching level the device behaves like a transistor with a gain dependent on current.

Switching characteristics (inductive load)

Turn-off when switched from I_T = 5 A to $V_D = V_{Dmax}$;

V_{GR} = 10 V; $L_G \leqslant 1.0\ \mu H$; $L_S \leqslant 0.25\ \mu H$; T_j = 25 °C

storage time	t_s	<	0.5	μs
fall time	t_f	<	0.25	μs
peak reverse gate current	I_{GR}	<	6	A

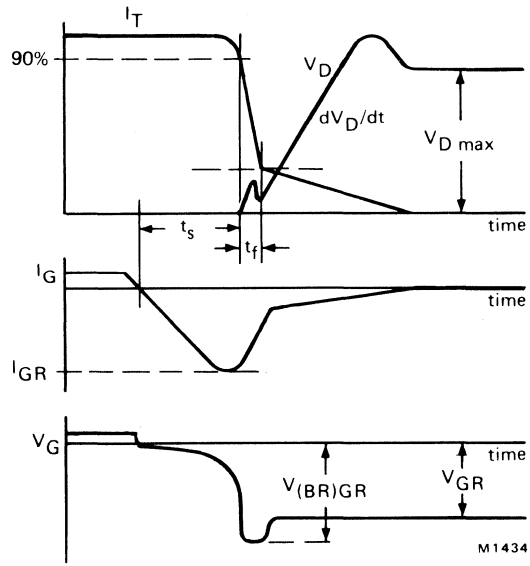

Fig.3 Waveforms.

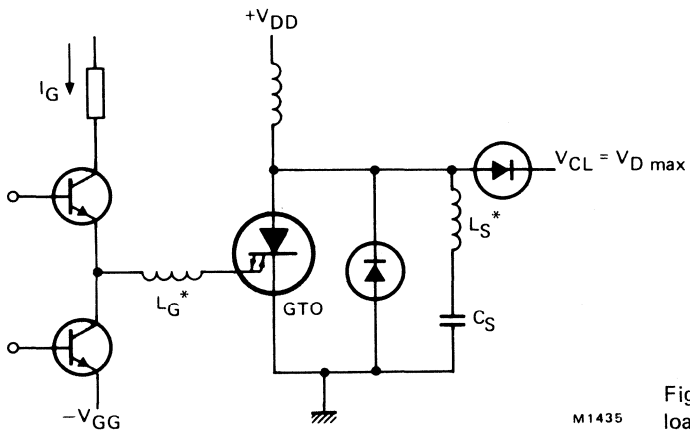

Fig.4 Inductive load test circuit.

*indicates stray series inductance only.

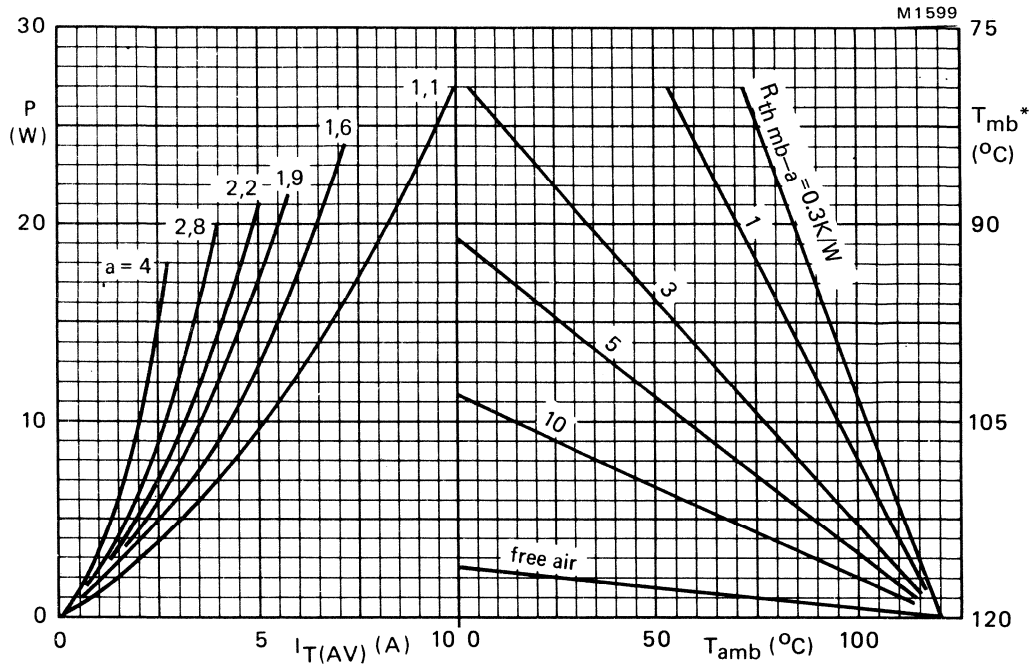

Fig.5 The right-hand part shows the interrelationship between the power (derived from the left-hand part) and the maximum permissible temperatures.

$$a = \text{form factor} = \frac{I_{T(RMS)}}{I_{T(AV)}}$$

P = power excluding switching losses.

*Mounting-base temperature scale is for comparison purposes and is correct only for $R_{th\ mb\text{-}a} < 9.6$ K/W.

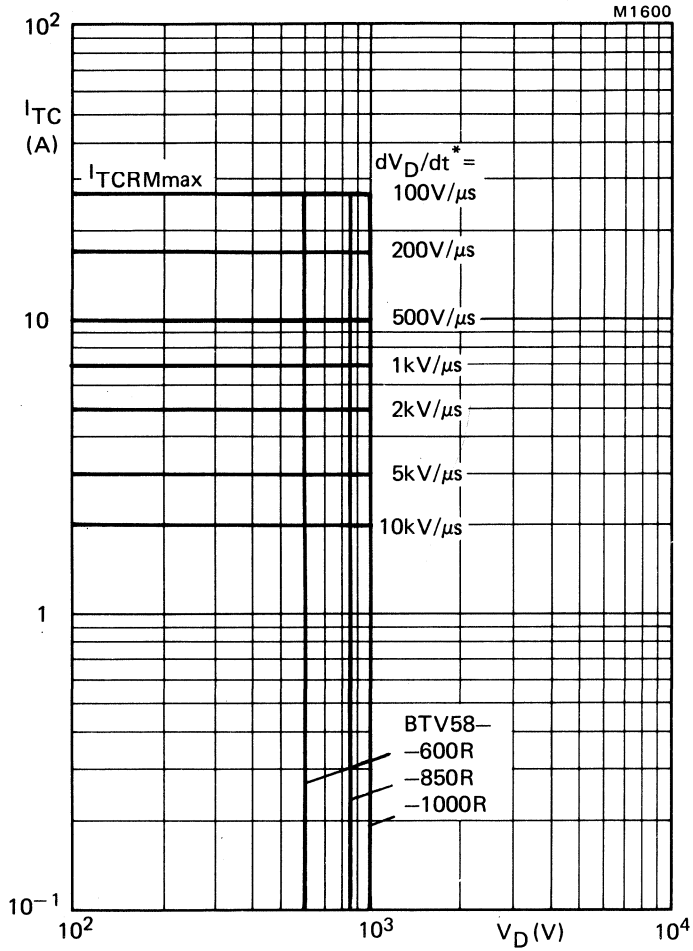

Fig.6 Anode current which can be turned off versus anode voltage; inductive load; V_{GR} = 10 V; $L_G \leqslant 1.0\ \mu H$; $L_S \leqslant 0.25\ \mu H$; T_j = 85 °C.
*dV_D/dt is calculated from I_T/C_S.

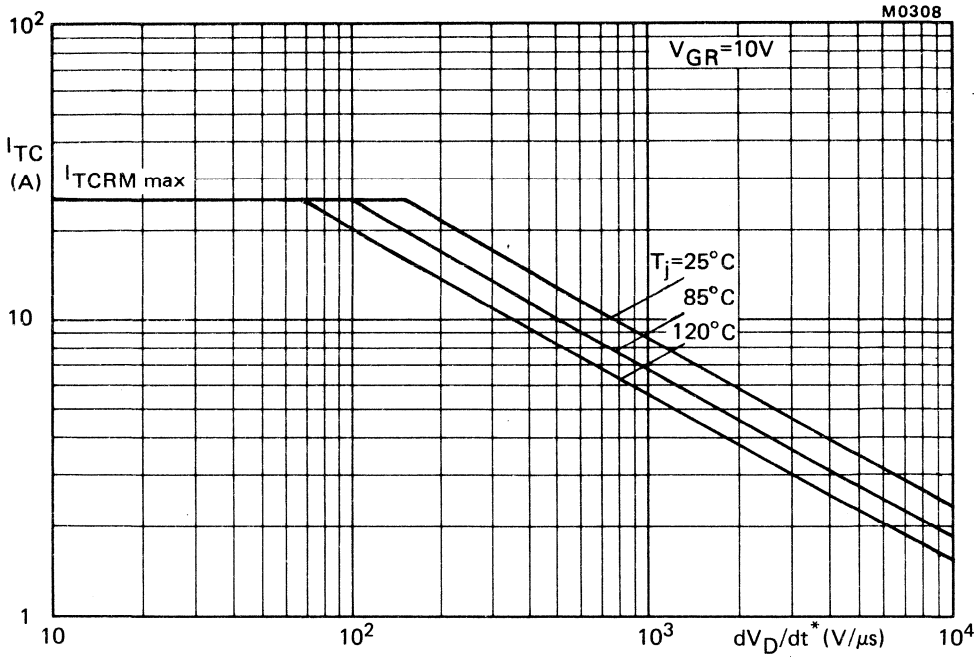

Fig.7 Anode current which can be turned off versus applied dV_D/dt^*; inductive load; V_{GR} = 10 V. $L_G \leqslant 1.0\ \mu H$; $L_S \leqslant 0.25\ \mu H$. *$dV_D/dt$ is calculated from I_T/C_S.

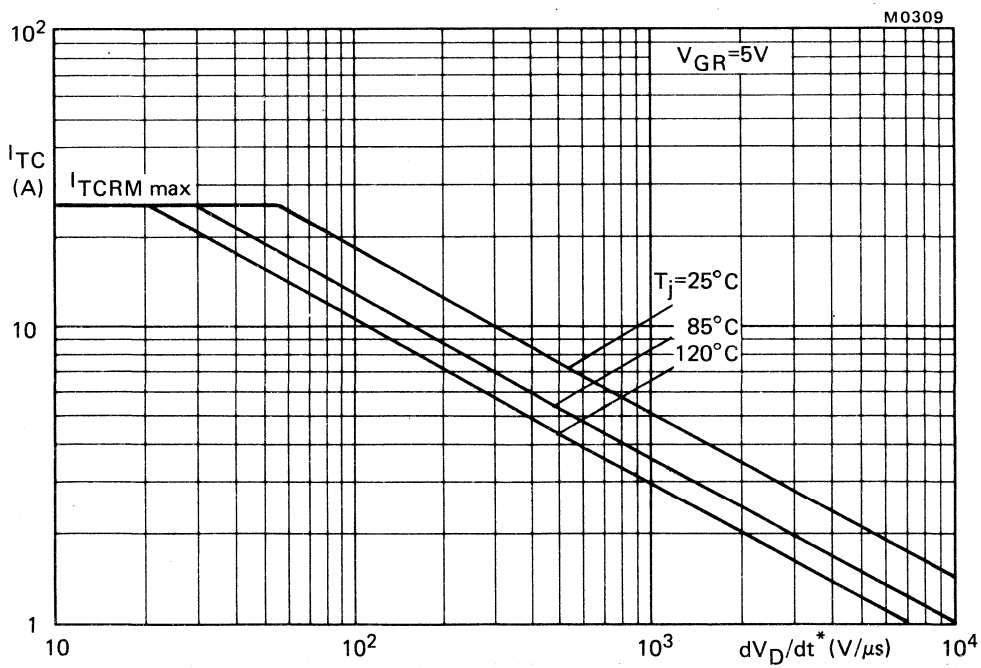

Fig.8 Anode current which can be turned off versus applied dV_D/dt^*; inductive load; V_{GR} = 5 V. $L_G \leqslant 1.0\ \mu H$; $L_S \leqslant 0.25\ \mu H$; *$dV_D/dt$ is calculated from I_T/C_S.

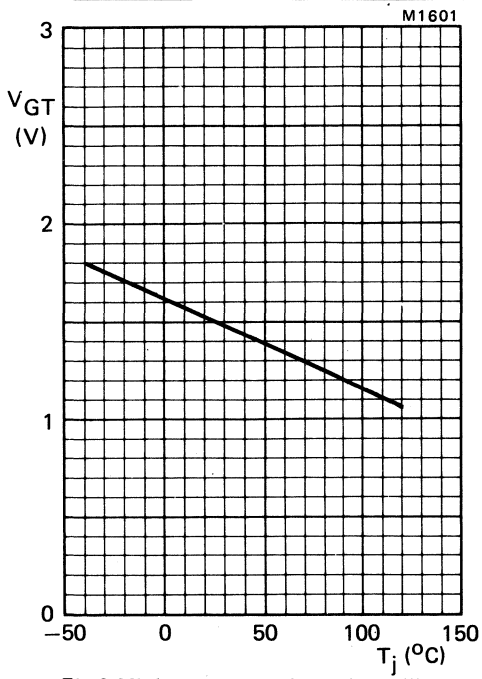

Fig.9 Minimum gate voltage that will trigger all devices as a function of junction temperature; V_D = 12 V.

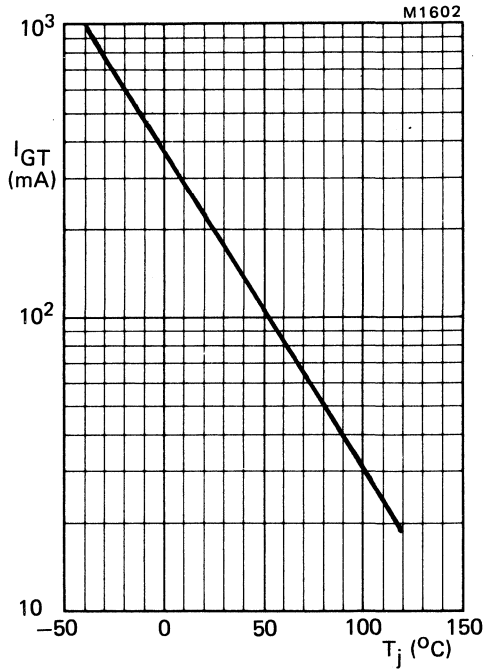

Fig.10 Minimum gate current that will trigger all devices as a function of junction temperature; V_D = 12 V.

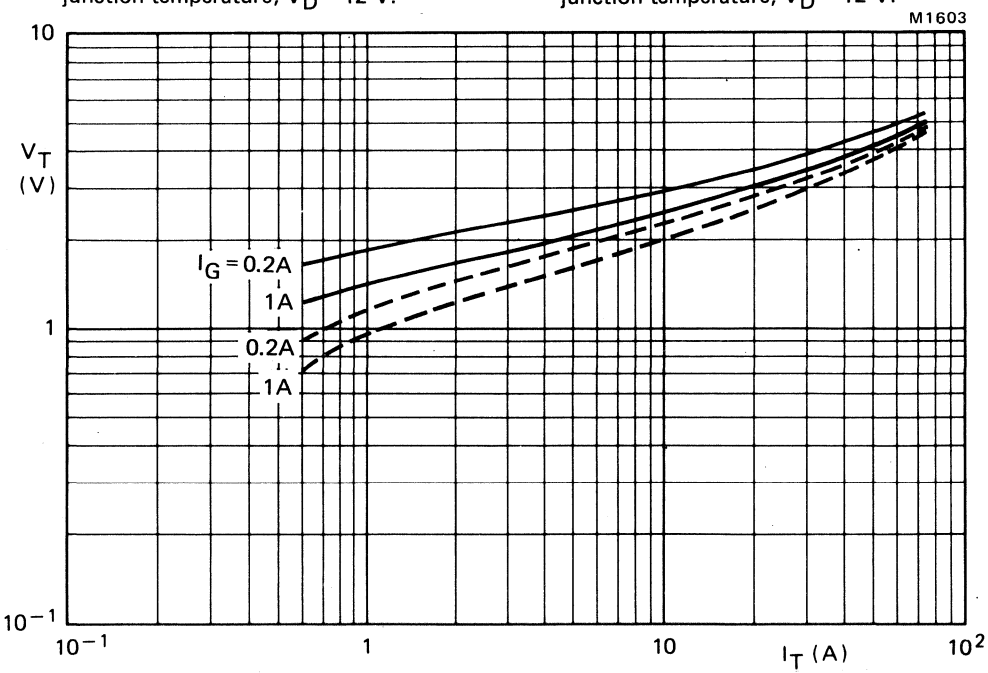

Fig.11 Maximum V_T versus I_T; —— T_j = 25 °C; – – – – T_j = 120 °C.

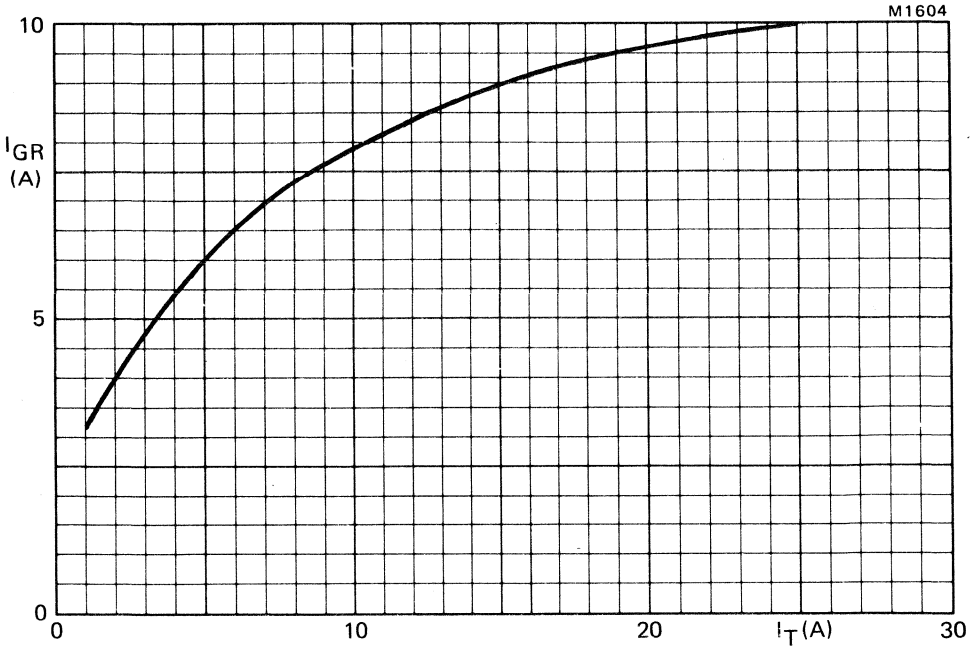

Fig.12 Peak reverse gate current versus anode current at turn-off; inductive load; V_{GR} = 10 V; I_G = 0.2 A; L_G = 0.8 μH; T_j = 120 °C; maximum values.

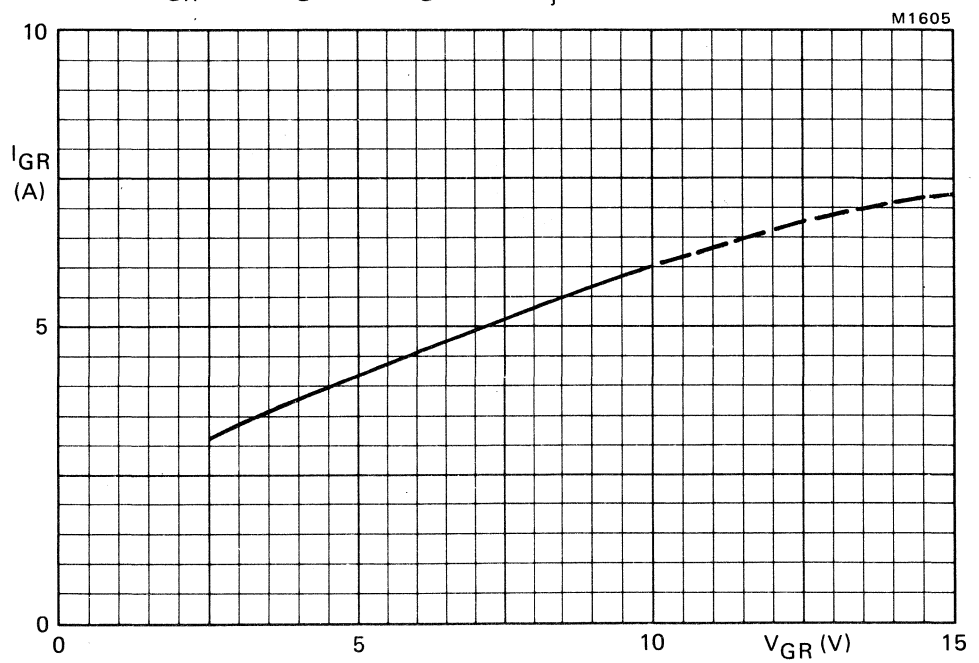

Fig.13 Peak reverse gate current versus applied reverse gate voltage; inductive load; I_T = 5 A; I_G = 0.2 A; L_G = 0.8 μH; T_j = 120 °C; maximum values.

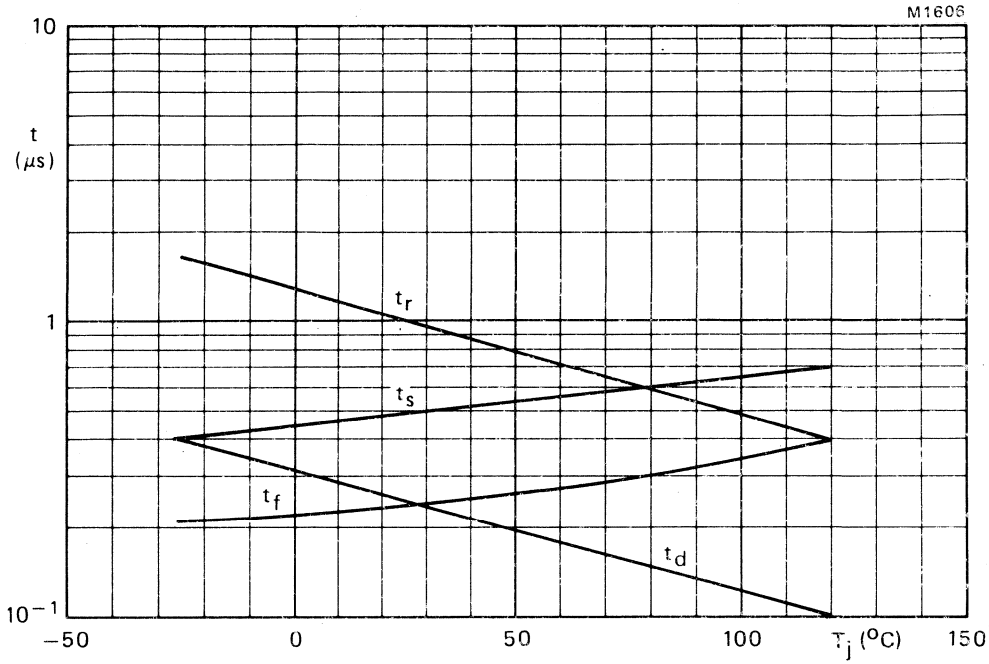

Fig.14 Switching times as a function of junction temperature; $V_D \geqslant 250$ V; $I_T = 5$ A; $I_{GF} = 0.5$ A; $V_{GR} = 10$ V; $I_G = 0.2$ A; $L_G = 0.8$ μH; maximum values.

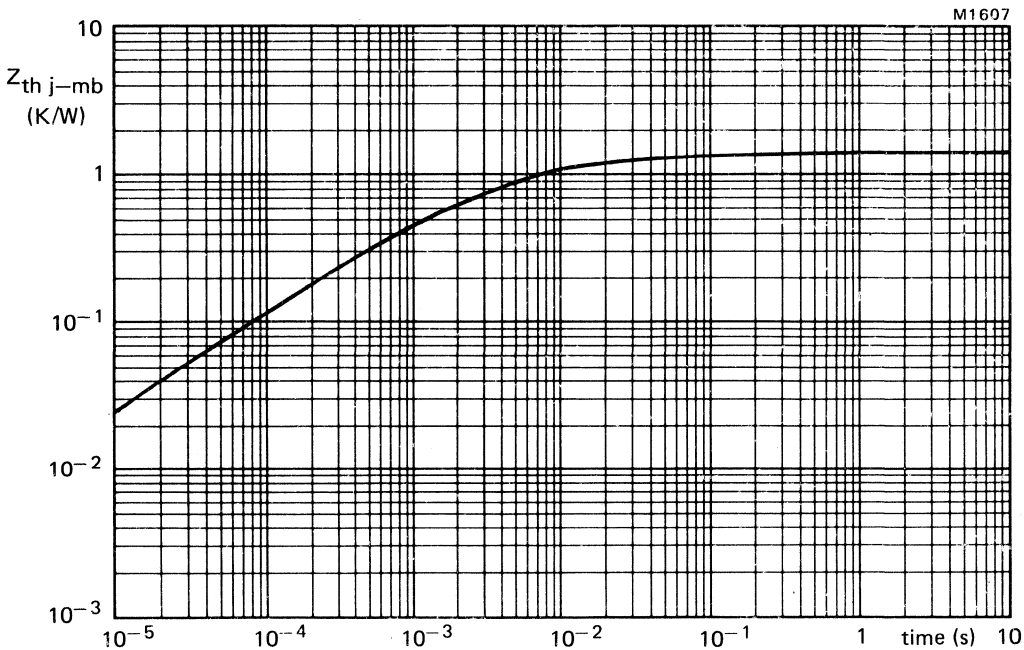

Fig.15 Transient thermal impedance.

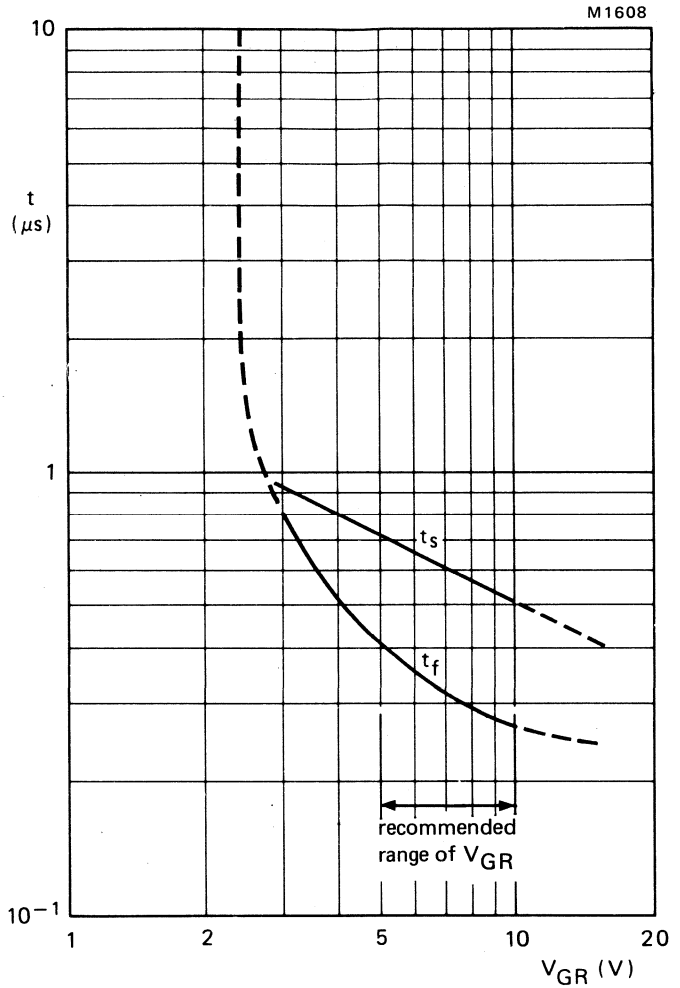

Fig.16 Storage and fall times versus applied reverse gate voltage; inductive load; I_T = 5 A; I_G = 0.2 A; L_G = 0.8 μH; T_j = 25 °C; maximum values.

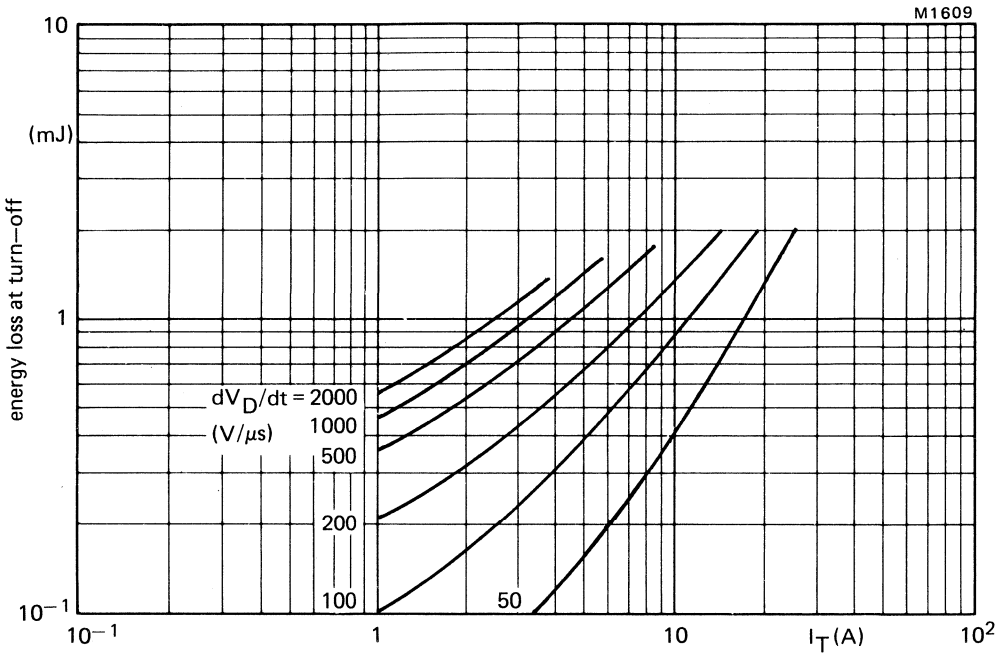

Fig.17 Maximum energy loss at turn-off (per cycle) as a function of anode current and applied dV_D/dt (calculated from I_T/C_S); dV_D/dt linear up to V_{Dmax} = 600 V; V_{GR} = 10 V; I_G = 0.2 A; $L_G \leqslant 1.0\ \mu H$; $L_S \leqslant 0.25\ \mu H$; T_j = 120 °C.

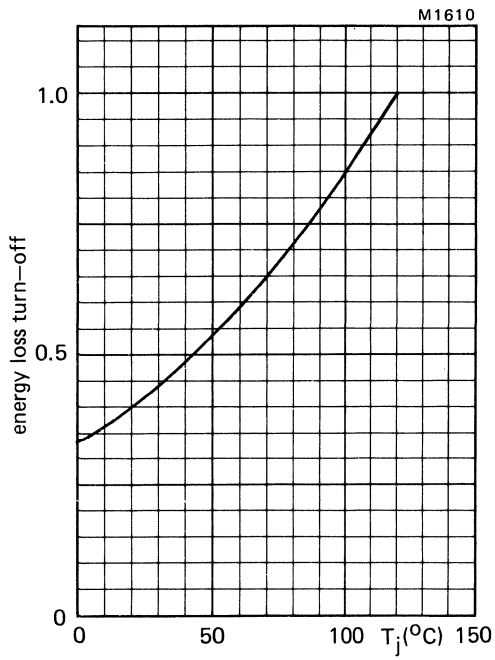

Fig.18 Energy loss at turn off as a function of junction temperature; I_G = 0.2 A; V_{GR} = 10 V. Normalised to T_j = 120 °C.

THYRISTORS

Glass-passivated silicon thyristors in metal envelopes, intended for use in power control circuits (e.g. light and motor control) and power switching systems.
The series consists of reverse polarity types (anode to stud) identified by a suffix R: BTW38–600R to 1000R.

QUICK REFERENCE DATA

			BTW38–600R	800R	1000R	
Repetitive peak voltages	V_{DRM}/V_{RRM}	max.	600	800	1000	V
Average on-state current	$I_{T(AV)}$	max.	10			A
R.M.S. on-state current	$I_{T(RMS)}$	max.	16			A
Non-repetitive peak on-state current	I_{TSM}	max.	150			A

MECHANICAL DATA

Dimensions in mm

Fig.1 TO-64: with metric M5 stud (ϕ5 mm); e.g. BTW38–600R.

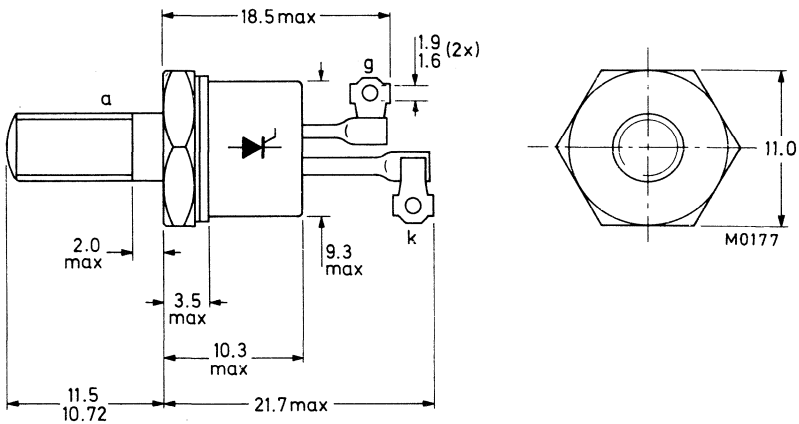

Net mass: 7 g
Diameter of clearance hole: max. 5.2 mm
Accessories supplied on request:
see ACCESSORIES section

Supplied with device: 1 nut, 1 lock washer
Torque on nut: min. 0.9 Nm (9 kg cm)
max. 1.7 Nm (17 kg cm)
Nut dimensions across the flats: 8.0 mm.

Products approved to CECC 50 011-006 available on request.

RATINGS

Limiting values in accordance with the Absolute Maximum System (IEC 134)

Anode to cathode

			BTW38–600R	800R	1000R	
Non-repetitive peak voltages ($t \leqslant 10$ ms)	V_{DSM}/V_{RSM}	max.	600	800	1000	V
Repetitive peak voltages	V_{DRM}/V_{RRM}	max.	600	800	1000	V
Crest working voltages	V_{DWM}/V_{RWM}	max.	400	600	700	V*

Average on-state current (averaged over any 20 ms period) up to T_{mb} = 85 °C	$I_{T(AV)}$	max.	10	A
R.M.S. on-state current	$I_{T(RMS)}$	max.	16	A
Repetitive peak on-state current	I_{TRM}	max.	75	A
Non-repetitive peak on-state current; t = 10 ms; half sine-wave; T_j = 125 °C prior to surge; with reapplied V_{RWMmax}	I_{TSM}	max.	150	A
I^2t for fusing (t = 10 ms)	I^2t	max.	112	A^2s
Rate of rise of on-state current after triggering with I_G = 250 mA to I_T = 25 A; dI_G/dt = 0.25 A/μs	dI_T/dt	max.	50	A/μs

Gate to cathode

Average power dissipation (averaged over any 20 ms period)	$P_{G(AV)}$	max.	0.5	W
Peak power dissipation	P_{GM}	max.	5	W

Temperatures

Storage temperature	T_{stg}		−55 to +125	°C
Junction temperature	T_j	max.	125	°C

THERMAL RESISTANCE

From junction to mounting base	$R_{th\ j\text{-}mb}$	=	1.8	K/W
From mounting base to heatsink with heatsink compound	$R_{th\ mb\text{-}h}$	=	0.5	K/W
From junction to ambient in free air	$R_{th\ j\text{-}a}$	=	45	K/W
Transient thermal impedance (t = 1 ms)	$Z_{th\ j\text{-}mb}$	=	0.1	K/W

OPERATING NOTE

The terminals should neither be bent nor twisted; they should be soldered into the circuit so that there is no strain on them.
During soldering the heat conduction to the junction should be kept to a minimum.

*To ensure thermal stability: $R_{th\ j\text{-}a} < 4$ K/W (d.c. blocking) or < 8 K/W (a.c.). For smaller heat-sinks $T_{j\ max}$ should be derated. For a.c. see Fig.3.

CHARACTERISTICS

Anode to cathode

On-state voltage (measured under pulse conditions) I_T = 20 A; T_j = 25 °C	V_T	<	2	V
Rate of rise of off-state voltage that will not trigger any device; expontential method; V_D = 2/3 V_{DRMmax}; T_j = 125 °C	dV_D/dt	<	200	V/μs
Reverse current V_R = V_{RWMmax}; T_j = 125 °C	I_R	<	3	mA
Off-state current V_D = V_{DWMmax}; T_j = 125 °C	I_D	<	3	mA
Latching current; T_j = 25 °C	I_L	<	150	mA
Holding current; T_j = 25 °C	I_H	<	75	mA

Gate to cathode

Voltage that will trigger all devices V_D = 6 V; T_j = 25 °C	V_{GT}	>	1.5	V
Voltage that will not trigger any device V_D = V_{DRMmax}; T_j = 125 °C	V_{GD}	<	200	mV
Current that will trigger all devices V_D = 6 V; T_j = 25 °C	I_{GT}	>	50	mA

Switching characteristics

Gate-controlled turn-on time (t_{gt} = t_d + t_r) when switched from V_D = V_{DRMmax} to I_T = 40 A; I_{GT} = 100 mA; dI_G/dt = 5 A/μs; T_j = 25 °C	t_{gt}	typ.	2	μs
Circuit-commutated turn-off time when switched from I_T = 40 A to V_R > 50 V with $-dI_T/dt$ = 10A/μs; dV_D/dt = 50 V/μs; T_j = 115 °C	t_q	typ.	35	μs

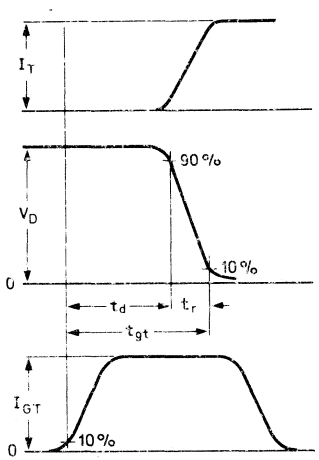

Fig.2a Gate-controlled turn-on time definition.

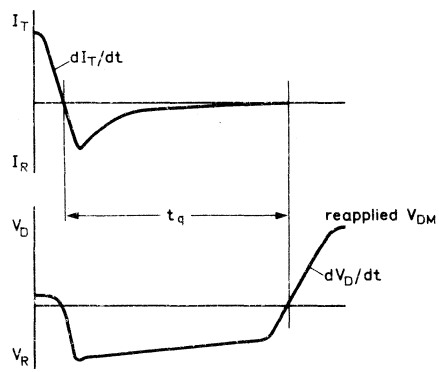

Fig.2b Circuit-commutated turn-off time definition.

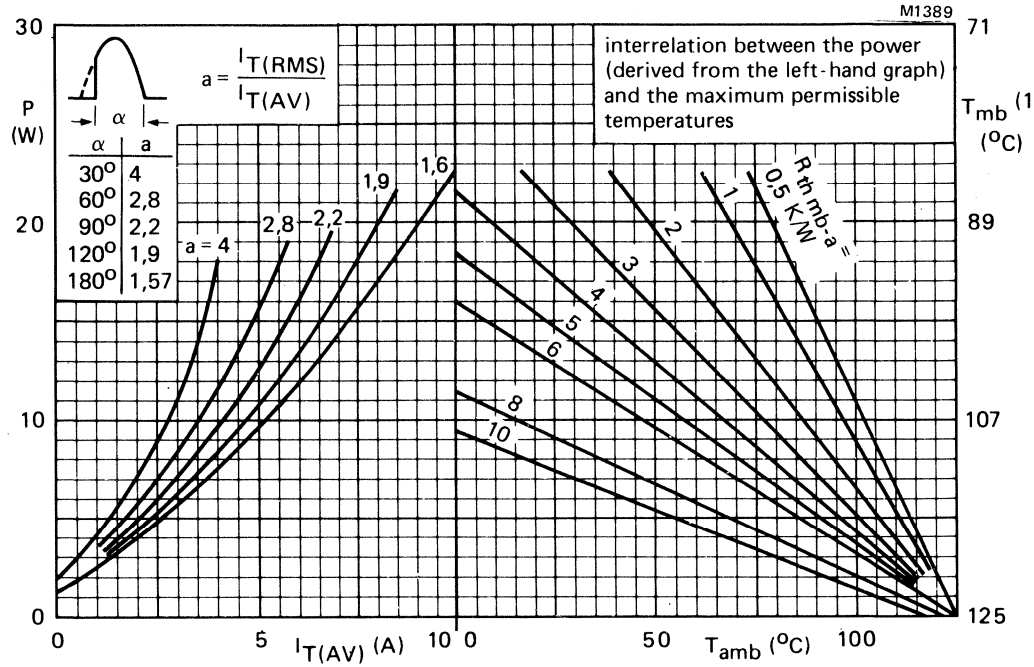

Fig. 3 (1) T_{mb}-scale is for comparison purposes only and is correct only for $R_{th\,mb\text{-}a} \leqslant 6$ K/W

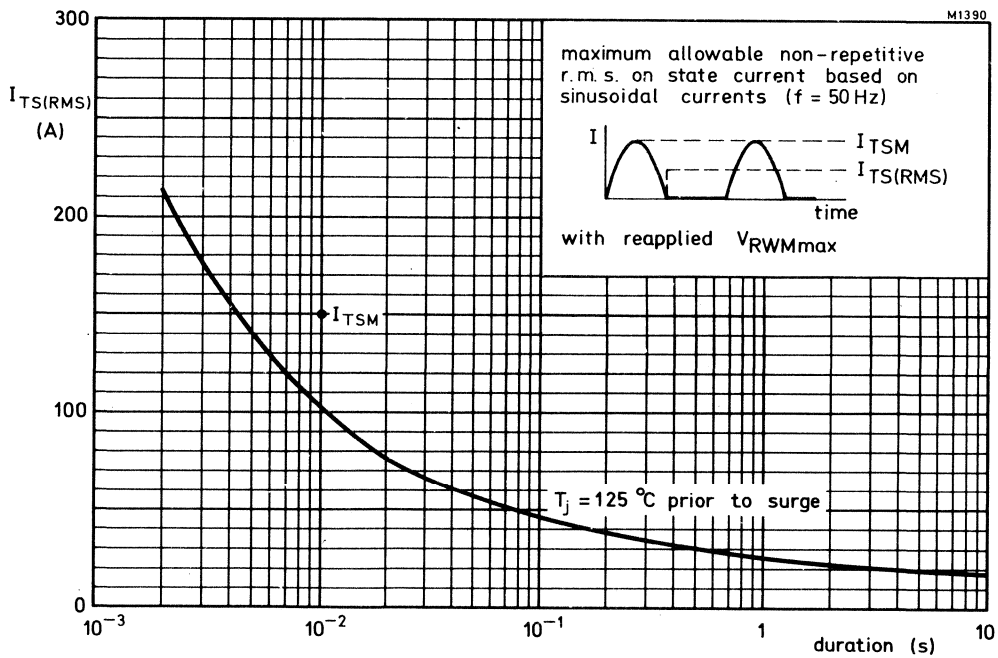

Fig. 4.

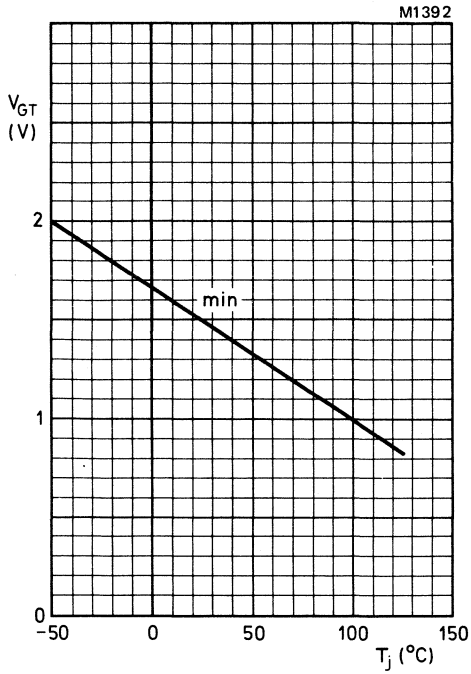

Fig. 5 Minimum gate voltage that will trigger all devices as a function of T_j.

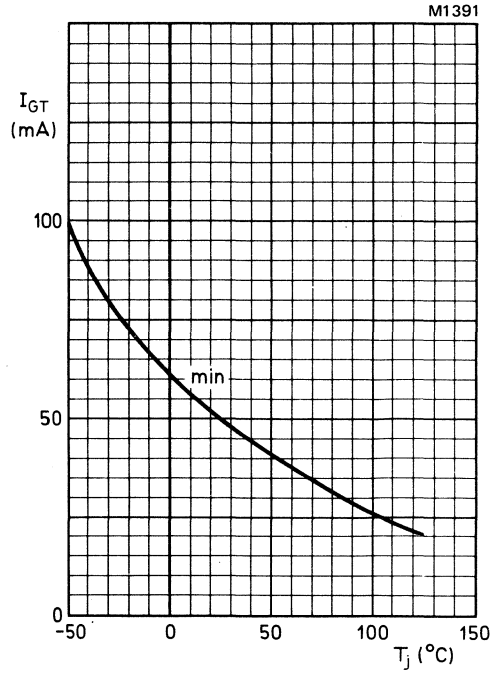

Fig. 6 Minimum gate current that will trigger all devices as a function of T_j.

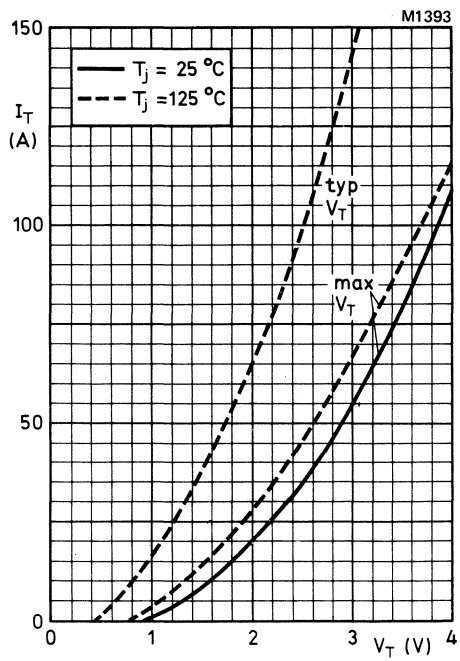

Fig. 7.

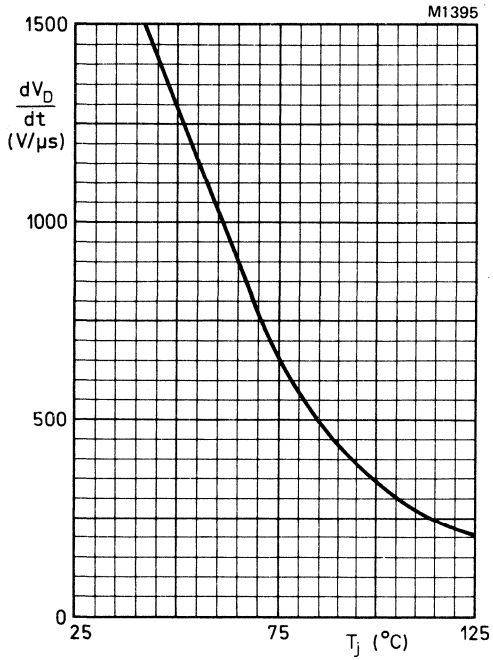

Fig. 8 Maximum rate of rise of off-state voltage that will not trigger any device (exponential method) as a function of T_j.

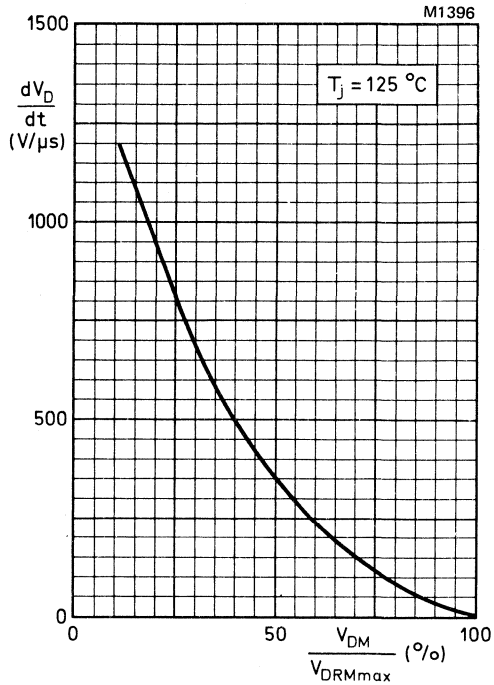

Fig. 9 Maximum rate of rise of off-state voltage that will not trigger any device (exponential method) as a function of applied voltage.

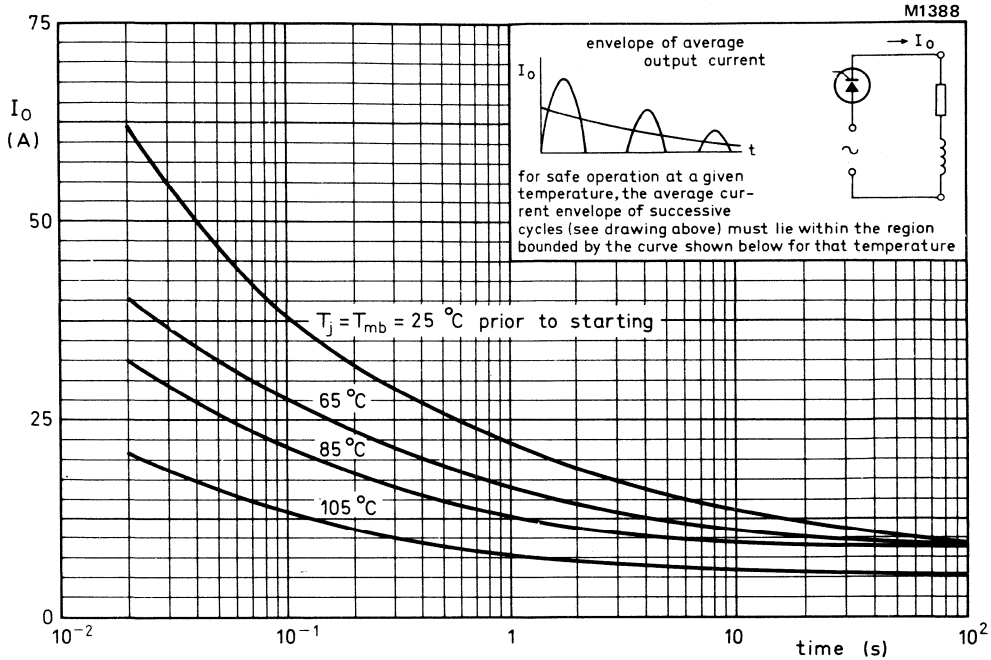

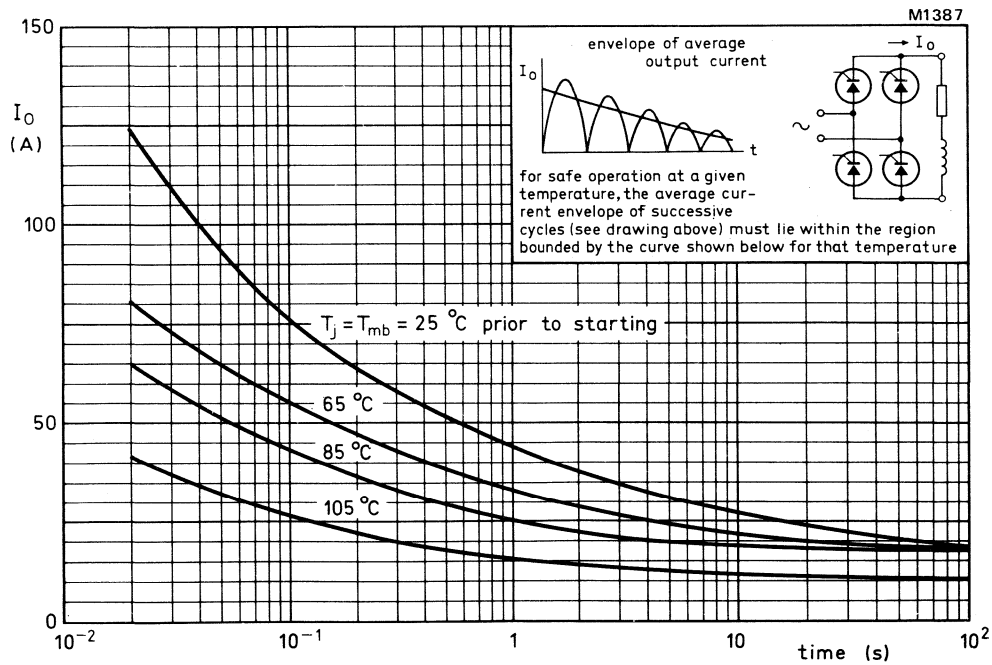

Fig. 10 Limits for starting or inrush currents.

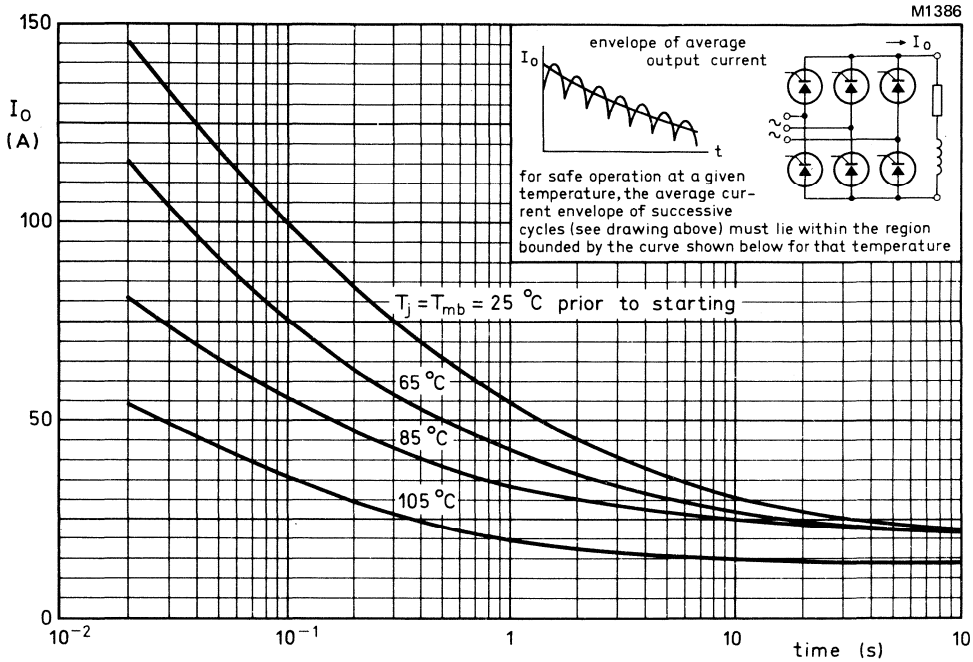

Fig. 11 Limits for starting or inrush currents.

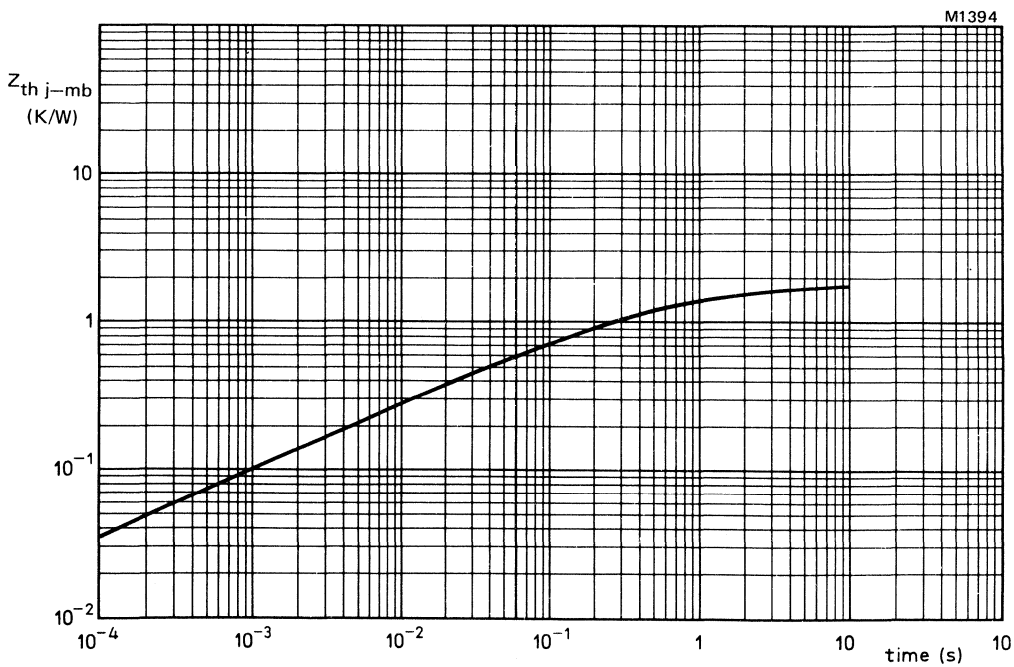

Fig. 12.

THYRISTORS

Also available to BS9341-F083

Glass-passivated silicon thyristors in metal envelopes, intended for use in power control applications in general, and lighting control (in a.c. controller circuit) up to 2,5 kW in particular. A feature of the thyristors is their high surge rating.
The series consistos of reverse polarity types (anode to stud) identified by a suffix R: BTW40-400R to 800R.

QUICK REFERENCE DATA

			BTW40-400R	600R	800R	
Repetitive peak voltages	V_{DRM}/V_{RRM}	max.	400	600	800	V
Average on-state current	$I_{T(AV)}$	max.	20			A
R.M.S. on-state current	$I_{T(RMS)}$	max.	32			A
Non-repetitive peak on-state current	I_{TSM}	max.	400			A

MECHANICAL DATA

Dimensions in mm

Fig. 1 TO-48: with metric M6 stud (ϕ 6 mm); e.g. BTW40-400R.
Types with ¼ in x 28 UNF stud (ϕ 6,35 mm) are available on request. These are indicated by the suffix U: e.g. BTW40-400RU.

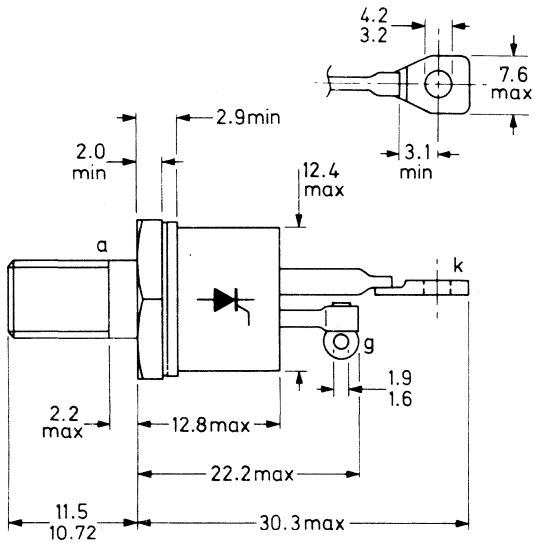

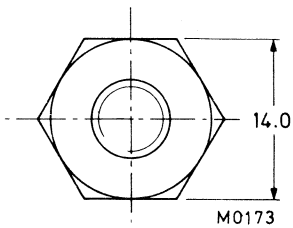

Net mass: 14 g
Diameter of clearance hole: max. 6,5 mm
Accessories supplied on request:
see ACCESSORIES section

Torque on nut: min. 1,7 Nm (17 kg cm)
max. 3,5 Nm (35 kg cm)
Supplied with the device:
1 nut, 1 lock washer
Nut dimensions across the flats;
M6: 10 mm
¼ in x 28 UNF: 11,1 mm

RATINGS

Limiting values in accordance with the Absolute Maximum System (IEC 134)

Anode to cathode

			BTW40-400R	600R	800R	
Non-repetitive peak voltages ($t \leqslant 10$ ms)	V_{DSM}/V_{RSM}	max.	400	600	800	V
Repetitive peak voltages	V_{DRM}/V_{RRM}	max.	400	600	800	V
Crest working voltages	V_{DWM}/V_{RWM}	max.	300	400	600	V *

Average on-state current (averaged over any 20 ms period) up to T_{mb} = 85 °C	$I_{T(AV)}$	max.	20	A
R.M.S. on-state current	$I_{T(RMS)}$	max.	32	A
Repetitive peak on-state current	I_{TRM}	max.	200	A
Non-repetitive peak on-state current; t = 10 ms; half sine-wave; T_j = 125 °C prior to surge; with reapplied V_{RWMmax}	I_{TSM}	max.	400	A
I^2t for fusing (t = 10 ms)	I^2t	max.	800	A^2s
Rate of rise of on-state current after triggering with I_G = 400 mA to I_T = 60 A; dI_G/dt = 0,4 A/μs	dI_T/dt	max.	100	A/μs

Gate to cathode

Reverse peak voltage	V_{RGM}	max.	10	V
Average power dissipation (averaged over any 20 ms period)	$P_{G(AV)}$	max.	1	W
Peak power dissipation	P_{GM}	max.	5	W

Temperatures

Storage temperature	T_{stg}		−55 to + 125	°C
Junction temperature	T_j	max.	125	°C

THERMAL RESISTANCE

From junction to mounting base	$R_{th\ j\text{-}mb}$	=	1	°C/W
From mounting base to heatsink with heatsink compound	$R_{th\ mb\text{-}h}$	=	0,2	°C/W
Transient thermal impedance (t = 1 ms)	$Z_{th\ j\text{-}mb}$	=	0,1	°C/W

OPERATING NOTE

The terminals should neither be bent not twisted; they should be soldered into the circuit so that there is no strain on them.
During soldering the heat conduction to the junction should be kept to a minimum.

* To ensure thermal stability: $R_{th\ j\text{-}a} < 6{,}5$ °C/W (d.c. blocking) or < 13 °C/W (a.c.). For smaller heatsinks $T_{j\ max}$ should be derated. For a.c. see Fig. 3.

CHARACTERISTICS

Anode to cathode

On-state voltage I_T = 50 A; T_j = 25 °C	V_T	<	2,1 V *
Rate of rise of off-state voltage that will not trigger any device; exponential method; V_D = 2/3 V_{DRMmax}; T_j = 125 °C	dV_D/dt	<	100 V/μs
Reverse current V_R = V_{RWMmax}; T_j = 125 °C	I_R	<	3 mA
Off-state current V_D = V_{DWMmax}; T_j = 125 °C	I_D	<	3 mA
Latching current; T_j = 25 °C	I_L	<	150 mA
Holding current; T_j = 25 °C	I_H	<	75 mA

Gate to cathode

Voltage that will trigger all devices V_D = 6 V; T_j = 25 °C	V_{GT}	>	1,5 V
Voltage that will not trigger any device V_D = V_{DRMmax}; T_j = 125 °C	V_{GD}	<	200 mV
Current that will trigger all devices V_D = 6 V; T_j = 25 °C	I_{GT}	>	75 mA

Switching characteristics

Gate-controlled turn-on time (t_{gt} = t_d + t_r) when switched from V_D = V_{DWMmax} to I_T = 100 A; I_{GT} = 400 mA; dI_G/dt = 1 A/μs; T_j = 25 °C	t_{gt}	<	1 μs
	t_r	<	0,5 μs

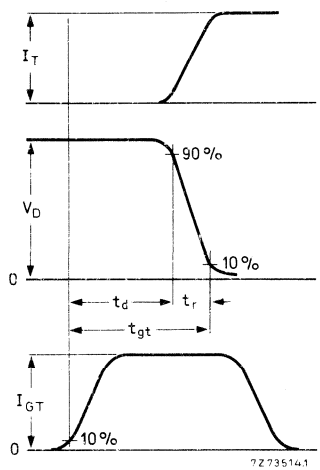

Gate-controlled turn-on time definition

*Measured under pulse conditions to avoid excessive dissipation.

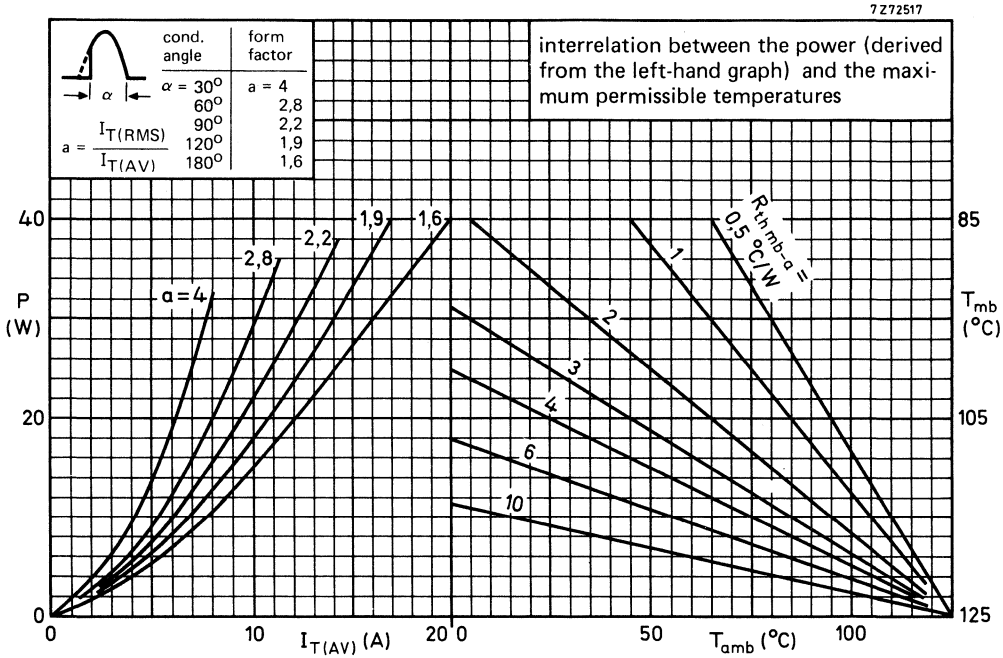
7Z72517
cond. angle
form factor
α = 30°
60°
90°
120°
180°
a = 4
2,8
2,2
1,9
1,6
a = I_T(RMS) / I_T(AV)
interrelation between the power (derived from the left-hand graph) and the maximum permissible temperatures
P (W)
40
20
0
a = 4
2,8
2,2
1,9
1,6
R_th mb-a = 0,5 °C/W
1
2
3
4
6
10
T_mb (°C)
85
105
125
0
10
I_T(AV) (A)
20
0
50
T_amb (°C)
100

Fig. 2.

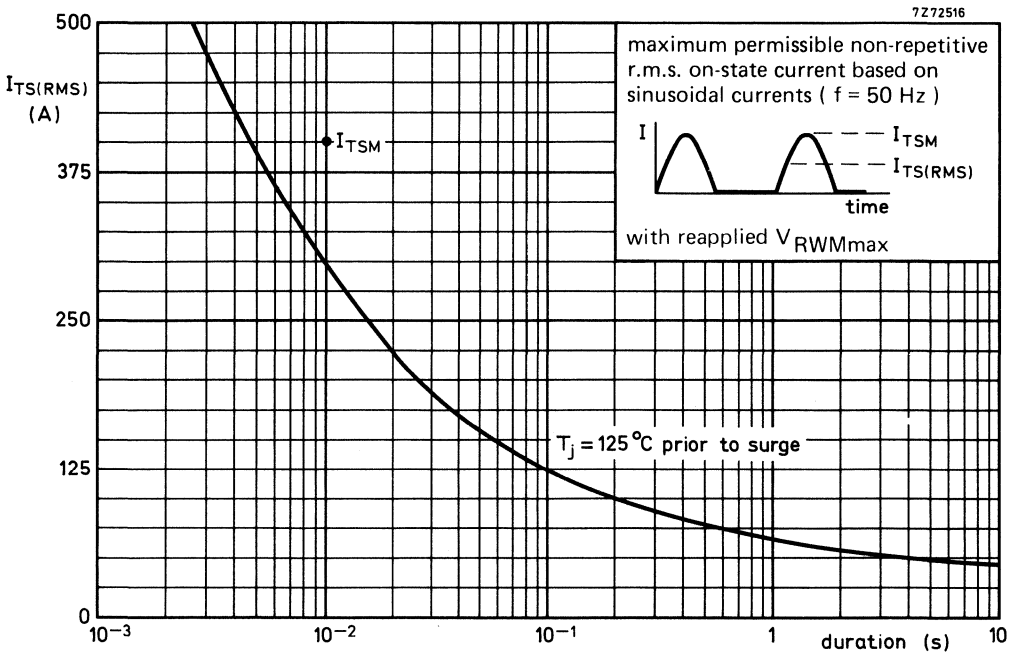
7Z72516
I_TS(RMS) (A)
500
375
250
125
0
I_TSM
maximum permissible non-repetitive r.m.s. on-state current based on sinusoidal currents (f = 50 Hz)
I
I_TSM
I_TS(RMS)
time
with reapplied V_RWMmax
T_j = 125 °C prior to surge
10^−3
10^−2
10^−1
1
duration (s)
10

Fig. 3.

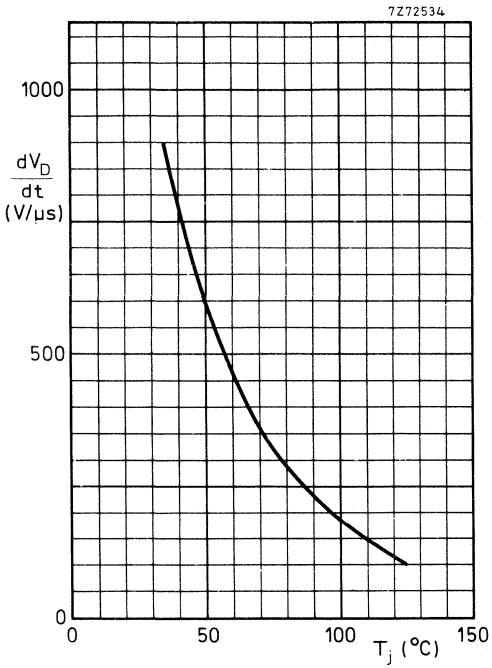

Fig. 4 Maximum rate of rise of off-state voltage that will not trigger any device (exponential method) as a function of T_j.

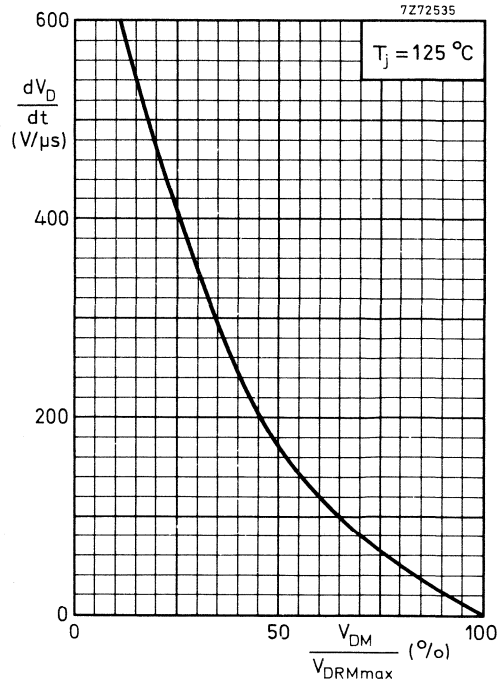

Fig. 5 Maximum rate of rise of off-state voltage that will not trigger any device (exponential method) as a function of applied voltage.

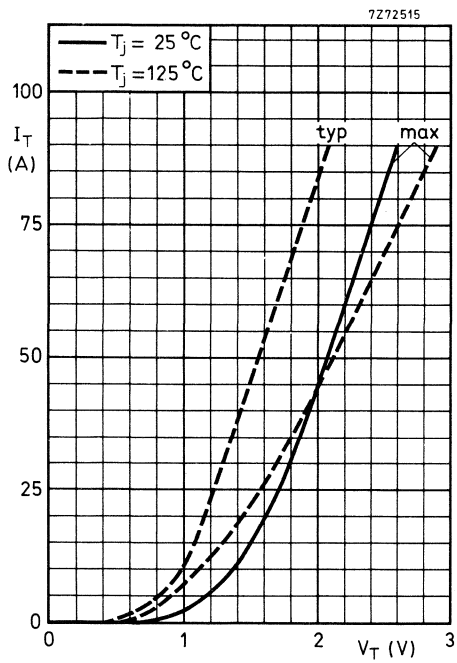

Fig. 6.

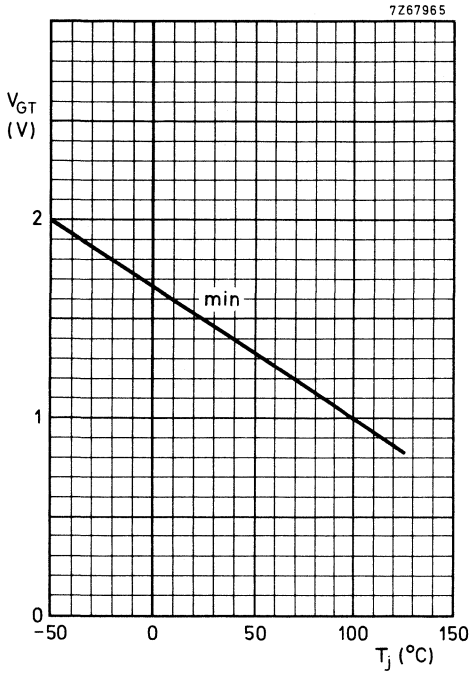

Fig. 7 Minimum gate voltage that will trigger all devices as a function of T_j.

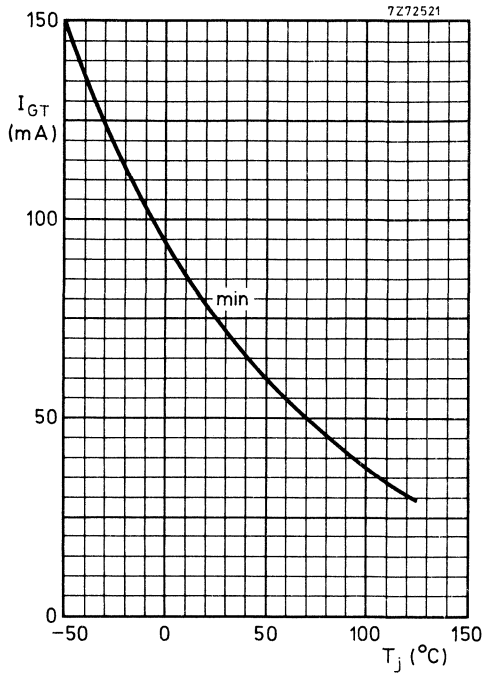

Fig. 8 Minimum gate current that will trigger all devices as a function of T_j.

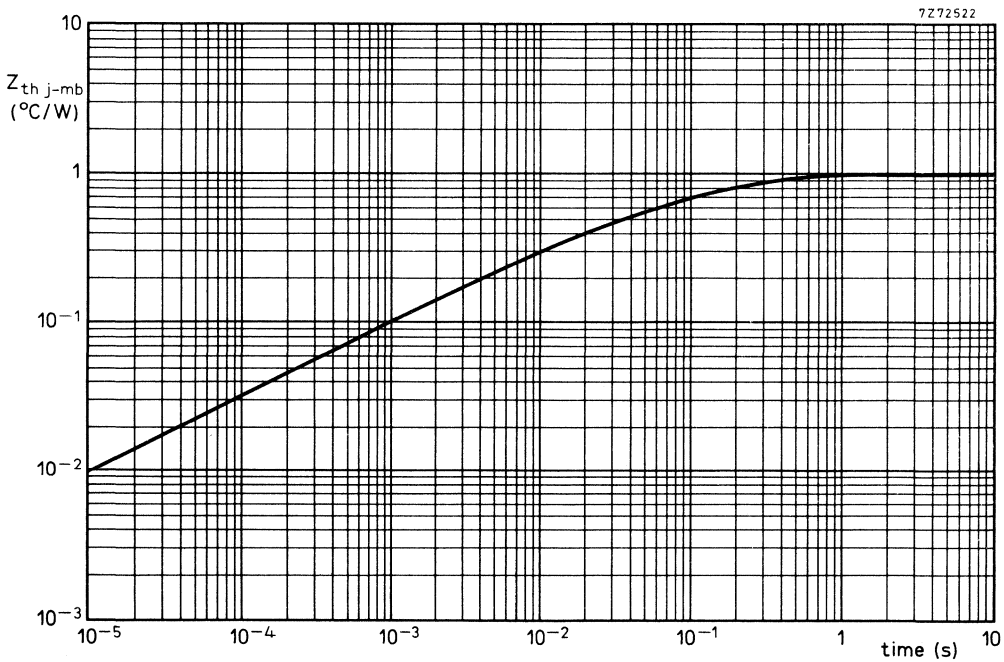

Fig. 9.

THYRISTORS

Glass-passivated silicon thyristors in metal envelopes with high dV_D/dt capabilities. They are intended for use in power control circuits and switching systems where high transients can occur (e.g. phase control in three-phase systems).
The series consists of reverse polarity types (anode to stud) identified by a suffix R: BTW42–600R to 1000R.

QUICK REFERENCE DATA

			BTW42–600R	800R	1000R	
Repetitive peak voltages	V_{DRM}/V_{RRM}	max.	600	800	1000	V
Average on-state current	$I_{T(AV)}$	max.		10		A
R.M.S. on-state current	$I_{T(RMS)}$	max.		16		A
Non-repetitive peak on-state current	I_{TSM}	max.		150		A
Rate of rise of off-state voltage that will not trigger any device	dV_D/dt	<		500		V/μs
On request (see Ordering Note)	dV_D/dt	<		1000		V/μs

MECHANICAL DATA

Dimensions in mm

Fig.1 TO–64: with metric M5 stud (ϕ5 mm); e.g. BTW42–600R.

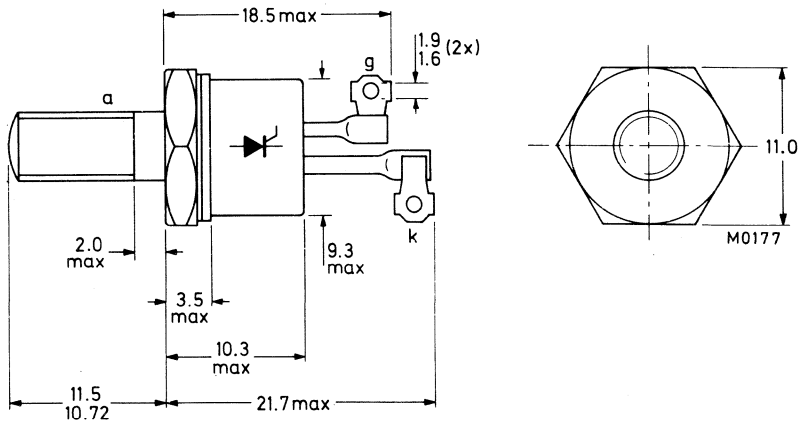

Net mass: 7 g
Diameter of clearance hole: max. 5.2 mm
Accessories supplied on request:
see ACCESSORIES section

Supplied with device: 1 nut, 1 lock washer.
Torque on nut: min. 0.9 Nm (9 kg cm)
max. 1.7 Nm (17 kg cm)
Nut dimensions across the flats: 8.0 mm.

Products approved to CECC 50 011-006 available on request.

RATINGS

Limiting values in accordance with the Absolute Maximum System (IEC 134)

Anode to cathode

			BTW42-600R	800R	1000R	
Non-repetitive peak voltages ($t \leqslant 10$ ms)	V_{DSM}/V_{RSM}	max.	600	800	1000	V
Repetitive peak voltages	V_{DRM}/V_{RRM}	max.	600	800	1000	V
Crest working voltages	V_{DWM}/V_{RWM}	max.	400	600	700	V*

Average on-state current (averaged over any 20 ms period) up to T_{mb} = 85 °C	$I_{T(AV)}$	max.	10	A
R.M.S. on-state current	$I_{T(RMS)}$	max.	16	A
Repetitive peak on-state current	I_{TRM}	max.	75	A
Non-repetitive peak on-state current; t = 10 ms; half sine-wave; T_j = 125 °C prior to surge; with reapplied V_{RWMmax}	I_{TSM}	max.	150	A
I^2t for fusing (t = 10 ms)	I^2t	max.	112	A^2s
Rate of rise of on-state current after triggering with I_G = 250 mA to I_T = 25 A; dI_G/dt = 0,25 A/μs	dI_T/dt	max.	50	A/μs

Gate to cathode

Average power dissipation (averaged over any 20 ms period)	$P_{G(AV)}$	max.	0,5	W
Peak power dissipation	P_{GM}	max.	5	W

Temperatures

Storage temperature	T_{stg}		−55 to + 125	°C
Junction temperature	T_j	max.	125	°C

THERMAL RESISTANCE

From junction to mounting base	$R_{th\ j\text{-}mb}$	=	1,8	K/W
From mounting base to heatsink with heatsink compound	$R_{th\ mb\text{-}h}$	=	0,5	K/W
From junction to ambient in free air	$R_{th\ j\text{-}a}$	=	45	K/W
Transient thermal impedance (t = 1 ms)	$Z_{th\ j\text{-}mb}$	=	0,1	K/W

OPERATING NOTE

The terminals should neither be bent nor twisted; they should be soldered into the circuit so that there is no strain on them.
During soldering the heat conduction to the junction should be kept to a minimum.

ORDERING NOTE

Types with dV_D/dt of 1000 V/μs are available on request. Add suffix C to the type number when ordering; e.g. BTW42-600RC.

*To ensure thermal stability: $R_{th\ j\text{-}a} < 4$ K/W (d.c. blocking) or < 8 K/W (a.c.). For smaller heatsinks $T_{j\ max}$ should be derated. For a.c. see Fig.3 (BTW38 data).

CHARACTERISTICS

Anode to cathode

On-state voltage (measured under pulse conditions) I_T = 20 A; T_j = 25 °C	V_T	<	2	V
Rate of rise of off-state voltage that will not trigger any device; expontential method; V_D = 2/3 V_{DRMmax}; T_j = 125 °C	dV_D/dt	<	500	V/μs
Reverse current V_R = V_{RWMmax}; T_j = 125 °C	I_R	<	3	mA
Off-state current V_D = V_{DWMmax}; T_j = 125 °C	I_D	<	3	mA
Latching current; T_j = 25 °C	I_L	<	150	mA
Holding current; T_j = 25 °C	I_H	<	75	mA

Gate to cathode

Voltage that will trigger all devices V_D = 6 V; T_j = 25 °C	V_{GT}	>	1.5	V
Voltage that will not trigger any device V_D = V_{DRMmax}; T_j = 125 °C	V_{GD}	<	200	mV
Current that will trigger all devices V_D = 6 V; T_j = 25 °C	I_{GT}	>	50	mA

Switching characteristics

Gate-controlled turn-on time (t_{gt} = t_d + t_r) when switched from V_D = V_{DRMmax} to I_T = 40 A; I_{GT} = 100 mA; dI_G/dt = 5 A/μs; T_j = 25 °C	t_{gt}	typ.	2	μs
Circuit-commutated turn-off time when switched from I_T = 40 A to V_R > 50 V with $-dI_T/dt$ = 10A/μs; dV_D/dt = 50 V/μs; T_j = 115 °C	t_q	typ.	35	μs

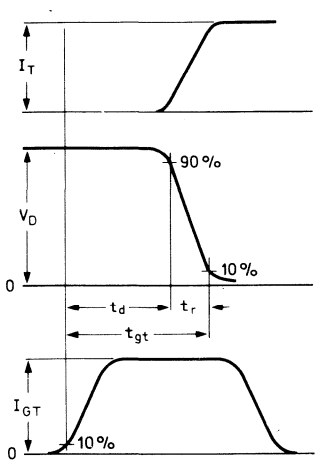

Fig.2a Gate-controlled turn-on time definition.

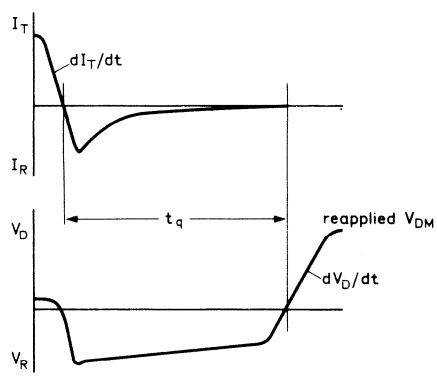

Fig.2b Circuit-commutated turn-off time definition.

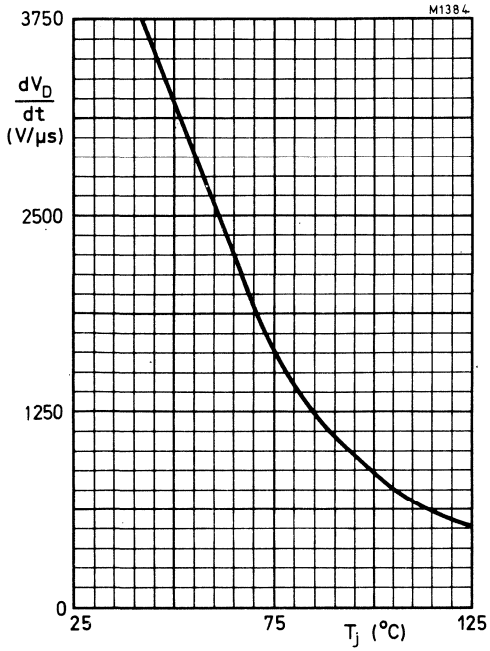

Fig.3 Maximum rate of rise of off-state voltage that will not trigger any device (exponential method) as a function of T_j.

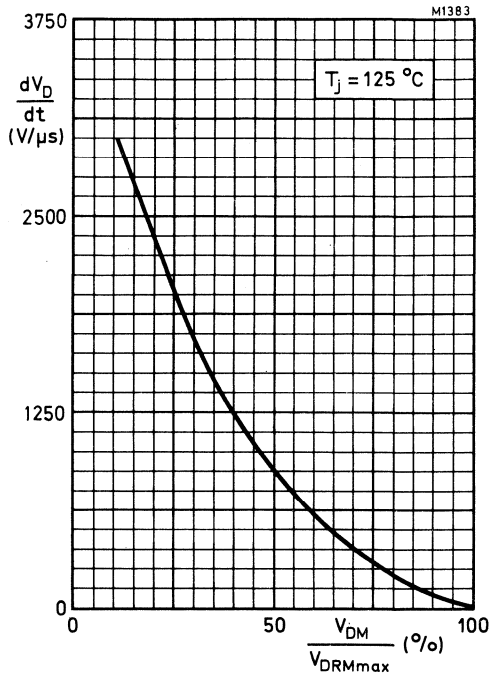

Fig.4 Maximum rate of rise of off-state voltage that will not trigger any device (exponential method) as a function of applied voltage.

FOR FURTHER DETAILS REFER TO BTW38 DATA.

TRIACS

Glass-passivated silicon triacs in metal envelopes, intended for industrial a.c. power control and particularly suitable for static switching of 3-phase induction motors. They may also be used for furnace control, lighting control and other static switching applications up to an r.m.s. on-state current of 15 A.

Two grades of commutation performance are available, 10 V/μs at 5 A/ms (suffix G) and 10 V/μs at 12 A/ms (suffix H).

QUICK REFERENCE DATA

			BTW43–600	800	1000	
Repetitive peak off-state voltage	V_{DRM}	max.	600	800	1000	V
R.M.S. on-state current	$I_{T(RMS)}$	max.		15		A
Non-repetitive peak on-state current	I_{TSM}	max.		120		A
Rate of rise of commutating voltage that will not trigger any device (see Characteristics)	dV_{com}/dt	<		10		V/μs

MECHANICAL DATA

Dimensions in mm

Fig. 1 TO-64: with metric M5 stud (ϕ 5 mm).

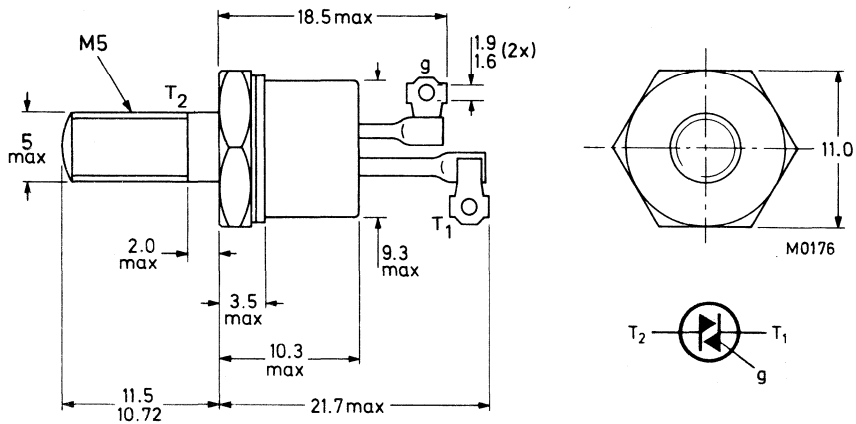

Net mass: 7 g

Diameter of clearance hole: max. 5,2 mm

Accessories supplied on request: 56295a (mica washer); 56295b (PTFE ring); 56295c (insulating bush).

Torque on nut: min. 0,9 Nm (9 kg cm)
max. 1,7 Nm (17 kg cm)

Supplied with the device: 1 nut, 1 lock washer

Nut dimensions across the flats: 8,0 mm

RATINGS

Limiting values in accordance with the Absolute Maximum System (IEC 134)

Voltages (in either direction)*

			BTW43–600	800	1000	
Non-repetitive peak off-state voltage (t ≤ 10 ms)	V_{DSM}	max.	600	800	1000	V
Repetitive peak off-state voltage	V_{DRM}	max.	600	800	1000	V
Crest working off-state voltage	V_{DWM}	max.	400	600	700	V

Currents (in either direction)

R.M.S. on-state current (conduction angle 360°)				
up to T_{mb} = 75 °C	$I_{T(RMS)}$	max.	15	A
at T_{mb} = 85 °C	$I_{T(RMS)}$	max.	12	A
Repetitive peak on-state current	I_{TRM}	max.	50	A
Non-repetitive peak on-state current T_j = 125 °C prior to surge; t = 20 ms; full sine-wave	I_{TSM}	max.	120	A
I^2t for fusing (t = 10 ms)	I^2t	max.	72	A^2s
Rate of rise of on-state current after triggering with I_G = 0,5 A to I_T = 25 A; dI_G/dt = 0,5 A/μs	dI_T/dt	max.	50	A/μs

Gate to terminal 1

Power dissipation

Average power dissipation (averaged over any 20 ms period)	$P_{G(AV)}$	max.	1	W
Peak power dissipation	P_{GM}	max.	10	W

Temperatures

Storage temperature	T_{stg}		− 55 to + 125	°C
Junction temperature	T_j	max.	125	°C

THERMAL RESISTANCE

From junction to mounting base				
full-cycle operation	$R_{th\ j\text{-}mb}$	=	2,0	K/W
half-cycle operation	$R_{th\ j\text{-}mb}$	=	4,0	K/W
From mounting base to heatsink with heatsink compound	$R_{th\ mb\text{-}h}$	=	0,5	K/W
Transient thermal impedance; t = 1 ms	$Z_{th\ j\text{-}mb}$	=	0,2	K/W

* To ensure thermal stability: $R_{th\ j\text{-}a}$ < 6 K/W (full-cycle or half-cycle operation). For smalller heat-sinks T_j should be derated (see Fig.2).

CHARACTERISTICS (T_j = 25 °C unless otherwise stated)

Polarities positive or negative, are identified with respect to T_1.

Voltages (in either direction)

On-state voltage I_T = 20 A	V_T	<	2,2 V*
Rate of rise of off-state voltage that will not trigger any device; exponential method; V_D = 2/3 V_{DRMmax}; T_j = 125 °C	dV_D/dt	<	200 V/µs

Rate of rise of commutating voltage that will not trigger any device; $I_{T(RMS)}$ = 12 A; V_D = V_{DWMmax}; T_{mb} = 85 °C

	dV_{com}/dt (V/µs)	$-dI_T/dt$ (A/ms)
BTW43-600G to 1000G	< 10	5
BTW43-600H to 1000H	< 10	12

Currents (in either direction)

Off-state current V_D = V_{DWMmax}; T_j = 125 °C	I_D	<	5 mA

		T_2 pos.	T_2 neg.
Latching current			
G positive	I_L	< 200	200 mA
G negative	I_L	< 200	200 mA
Holding current			
G positive or negative	I_H	< 100	100 mA

Gate to terminal 1

Voltage and current that will trigger all devices V_D = 12 V			
G positive	V_{GT}	> 2,5	5,0 V
	I_{GT}	> 100	200 mA
G negative	$-V_{GT}$	> 2,5	2,5 V
	$-I_{GT}$	> 100	100 mA
Voltage that will not trigger any device V_D = V_{DRMmax}; T_j = 125 °C; G positive or negative	V_{GD}	< 0,2	0,2 V

* Measured under pulse conditions to avoid excessive dissipation.

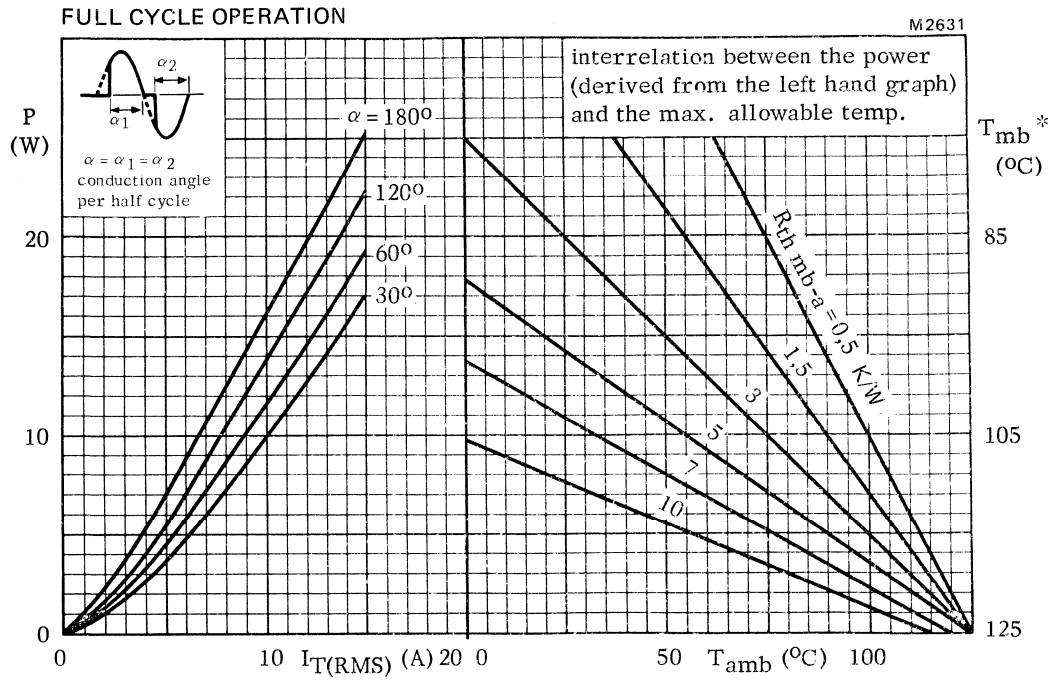

Fig.2 * T_{mb}-scale is for comparison purposes only and is correct only for $R_{th\ mb\text{-}a} \leq 4$ K/W.

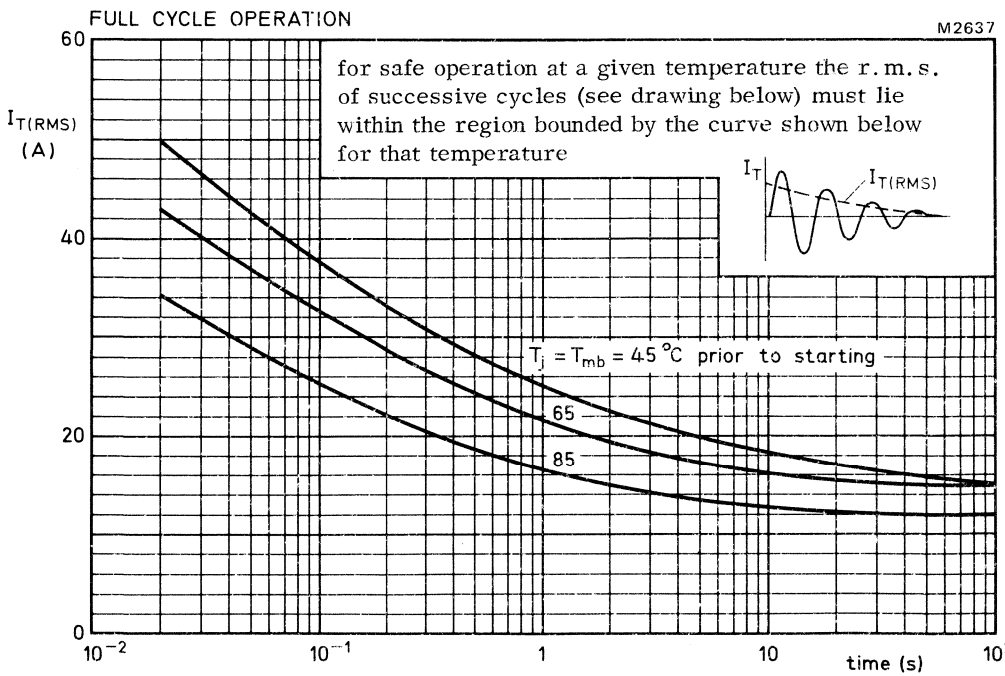

Fig.3

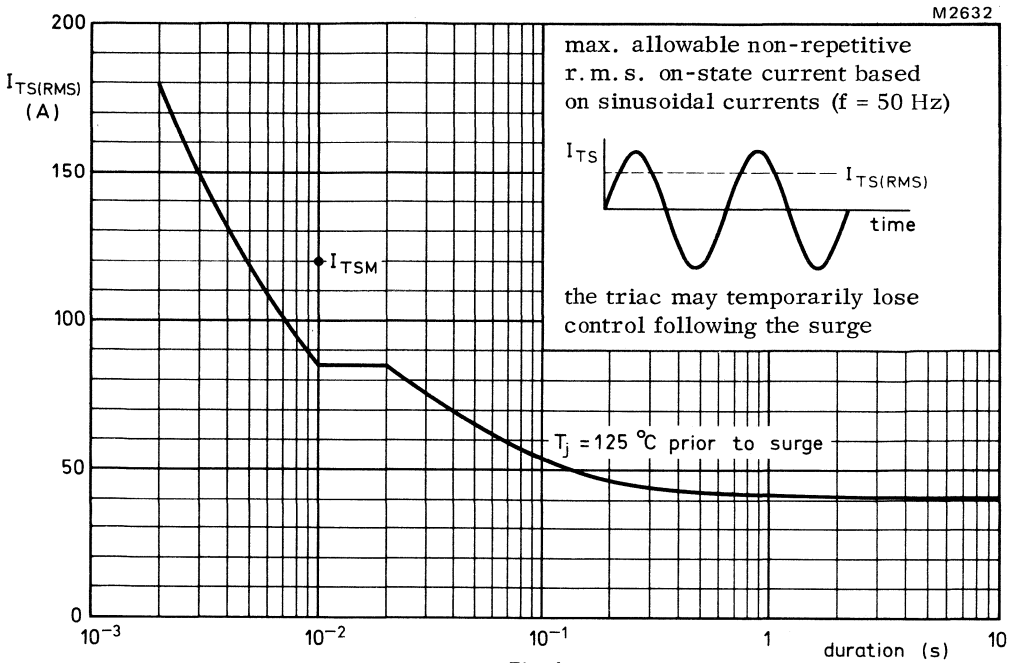
M2632
200
150
100
50
0
$I_{TS(RMS)}$ (A)
I_{TSM}
max. allowable non-repetitive r.m.s. on-state current based on sinusoidal currents (f = 50 Hz)
I_{TS}
$I_{TS(RMS)}$
time
the triac may temporarily lose control following the surge
T_j = 125 °C prior to surge
10^{-3}
10^{-2}
10^{-1}
1
10
duration (s)

Fig. 4.

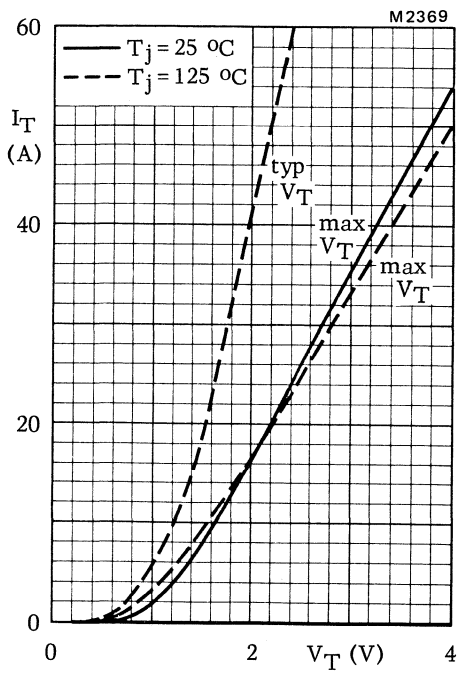
M2369
60
40
20
0
I_T (A)
T_j = 25 °C
T_j = 125 °C
typ V_T
max V_T
max V_T
0
2
4
V_T (V)

Fig. 5.

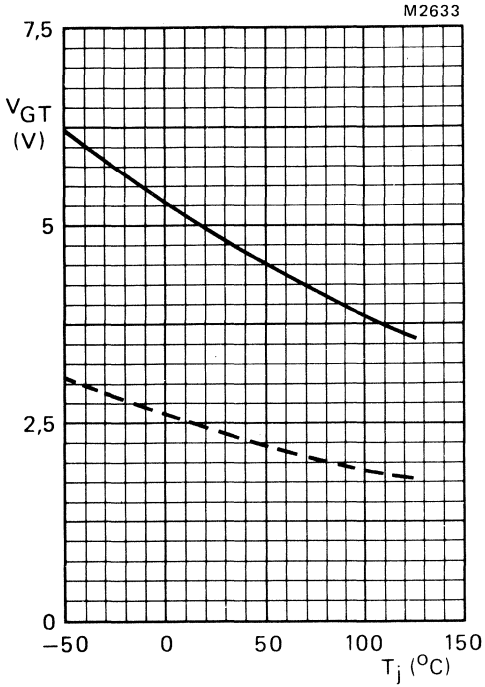

Fig. 6 Minimum gate voltage that will trigger all devices as a function of T_j.

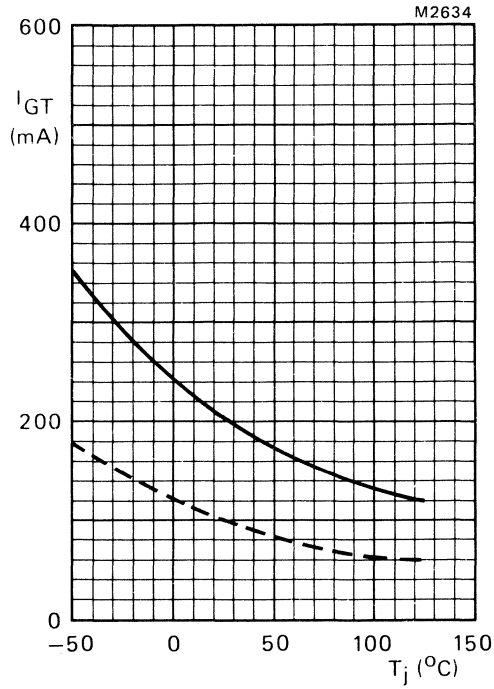

Fig. 7 Minimum gate current that will trigger all devices as a function of T_j.

Conditions for Figs 6 and 7:

——— T_2 negative, gate positive with respect to T_1
– – – – all other conditions

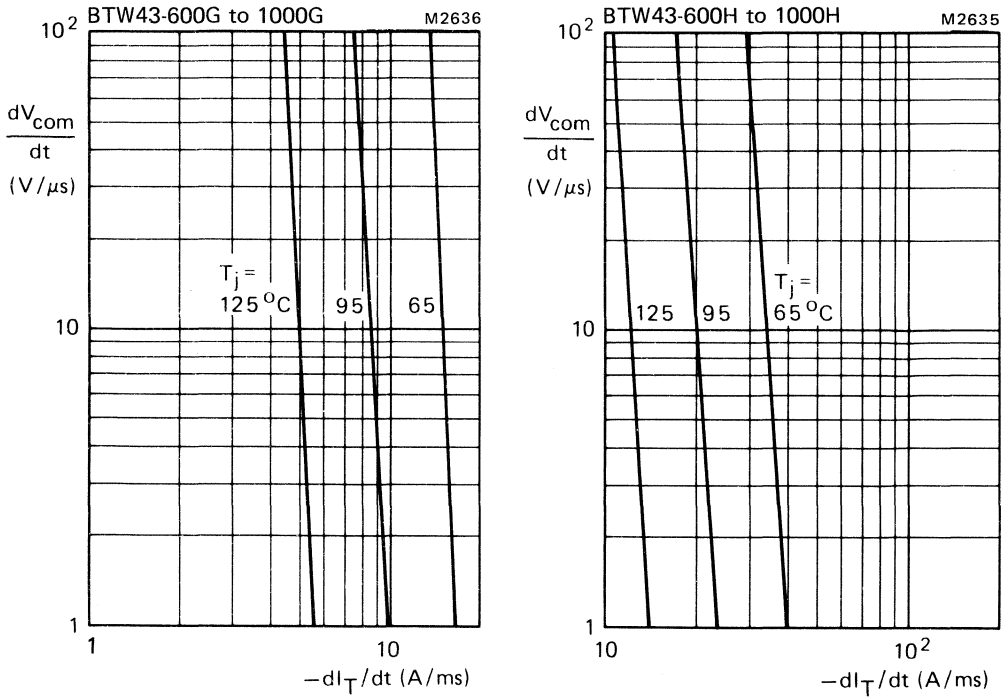

Fig. 8 Maximum rate of rise of commutating voltage that will not trigger any device as a function of rate of fall of on-state current; $I_{T(RMS)}$ = 12 A; $V_D = V_{DWMmax}$.

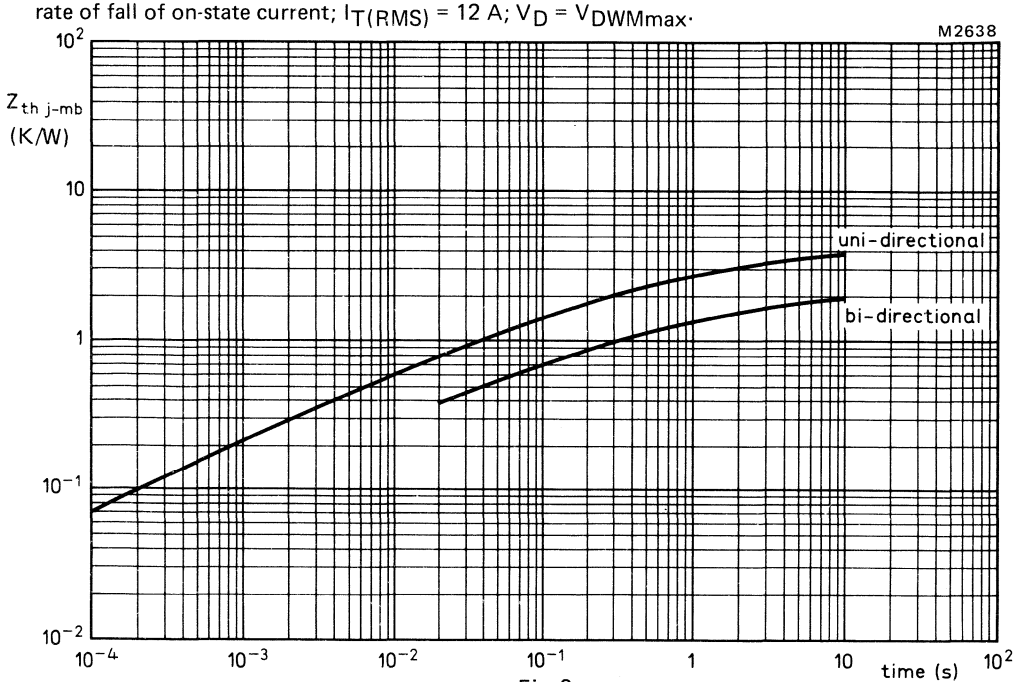

Fig. 9.

THYRISTORS

Glass-passivated silicon thyristors in metal envelopes, intended for power control applications.

The series consistos of reverse polarity types (anode to stud) identified by a suffix R: BTW45-400R to 1200R.

QUICK REFERENCE DATA

		BTW45-400R	600R	800R	1000R	1200R	
Repetitive peak voltages $V_{DRM} = V_{RRM}$	max.	400	600	800	1000	1200	V

Average on-state current	$I_{T(AV)}$	max.	16	A
R.M.S. on-state current	$I_{T(RMS)}$	max.	25	A
Non-repetitive peak on-state current	I_{TSM}	max.	300	A
Rate of rise of off-state voltage that will not trigger any device	dV_D/dt	<	200	V/μs
On request (see Ordering Note)	dV_D/dt	<	1000	V/μs

MECHANICAL DATA

Dimensions in mm

Fig. 1 TO-48: with metric M6 stud (ϕ 6 mm); e.g. BTW45-400R.
Types with ¼ in x 28 UNF stud (ϕ 6,35 mm) are available on request. These are indicated by the suffix U: BTW45-400RU.

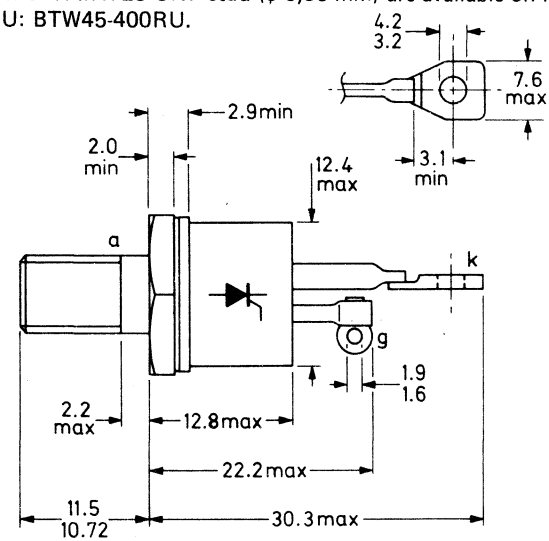

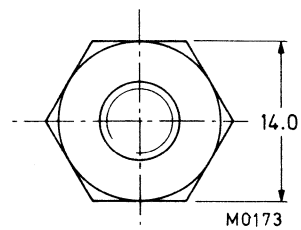

Net mass: 14 g
Diameter of clearance hole: max. 6,5 mm
Accessories supplied on request:
see ACCESSORIES section

Torque on nut: min. 1,7 Nm (17 kg cm)
max. 3,5 Nm (35 kg cm)
Supplied with the device:
1 nut, 1 lock washer
Nut dimensions across the flats;
M6: 10 mm
¼ in x 28 UNF: 11,1 mm

Products approved to CECC 50 011-002, available on request

RATINGS

Limiting values in accordance with the Absolute Maximum System (IEC 134)

Anode to cathode

			BTW45-400R	600R	800R	1000R	1200R	
Non-repetitive peak voltages ($t \leqslant 10$ ms)	V_{DSM}/V_{RSM}	max.	400	600	800	1000	1200	V
Repetitive peak voltages	V_{DRM}/V_{RRM}	max.	400	600	800	1000	1200	V
Crest working voltages	V_{DWM}/V_{RWM}	max.	300	400	600	700	800	V*

Average on-state current (averaged over any 20 ms period) up to T_{mb} = 85 °C	$I_{T(AV)}$	max.	16	A
R.M.S. on-state current	$I_{T(RMS)}$	max.	25	A
Repetitive peak on-state current	I_{TRM}	max.	200	A
Non-repetitive peak on-state current; t = 10 ms; half sine-wave; T_j = 125 °C prior to surge; with reapplied $V_{RWM\,max}$	I_{TSM}	max.	300	A
I^2t for fusing (t = 10 ms)	I^2t	max.	450	A^2s
Rate of rise of on-state current after triggering with I_G = 400 mA to I_T = 60 A; dI_G/dt = 0,4 A/μs	dI_T/dt	max.	100	A/μs

Gate to cathode

Reverse peak voltage	V_{RGM}	max.	10	V
Average power dissipation (averaged over any 20 ms period)	$P_{G(AV)}$	max.	1	W
Peak power dissipation	P_{GM}	max.	5	W

Temperatures

Storage temperature	T_{stg}		−55 to + 125	°C
Junction temperature	T_j	max.	125	°C

THERMAL RESISTANCE

From junction to mounting base	$R_{th\,j\text{-}mb}$	=	1,33	°C/W
From mounting base to heatsink; with heatsink compound	$R_{th\,mb\text{-}h}$	=	0,2	°C/W
Transient thermal impedance (t = 1 ms)	$Z_{th\,j\text{-}mb}$	=	0,1	°C/W

OPERATING NOTE

The terminals should neither be bent nor twisted; they should be soldered into the circuit so that there is no strain on them.
During soldering the heat conduction to the junction should be kept to a minimum.

* To ensure thermal stability: $R_{th\,j\text{-}a} < 6{,}5$ °C/W (d.c. blocking) or < 13 °C/W (a.c.). For smaller heatsinks $T_{j\,max}$ should be derated. For a.c. see Fig. 2.

CHARACTERISTICS

Anode to cathode

On-state voltage I_T = 50 A; T_j = 25 °C	V_T	<	2 V*
Rate of rise of off-state voltage that will not trigger any device; exponential method; V_D = 2/3 $V_{DRM\,max}$; T_j = 125 °C	dV_D/dt	<	200 V/μs
Reverse current $V_R = V_{RWM\,max}$; T_j = 125 °C	I_R	<	3 mA
Off-state current $V_D = V_{DWM\,max}$; T_j = 125 °C	I_D	<	3 mA
Latching current; T_j = 25 °C	I_L	<	150 mA
Holding current; T_j = 25 °C	I_H	<	75 mA

Gate to cathode

Voltage that will trigger all devices V_D = 6 V; T_j = 25 °C	V_{GT}	>	1,5 V
Voltage that will not trigger any device $V_D = V_{DRM\,max}$; T_j = 125 °C	V_{GD}	<	200 mV
Current that will trigger all devices V_D = 6 V; T_j = 25 °C	I_{GT}	>	75 mA

Switching characteristics

Gate-controlled turn-on time ($t_{gt} = t_d + t_r$) when switched from $V_D = V_{DWM\,max}$ to I_T = 100 A; I_{GT} = 400 mA; dI_G/dt = 1 A/μs; T_j = 25 °C	t_{gt}	<	1 μs
	t_r	<	0,5 μs

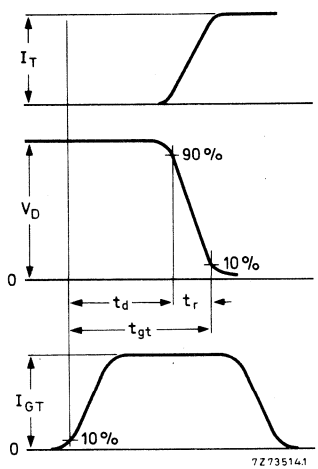

Gate-controlled turn-on time definition.

ORDERING NOTE

Types with dV_D/dt of 1000 V/μs are available on request. Add suffix C to the type number when ordering; e.g. BTW45-400RC.

*Measured under pulse conditions to avoid excessive dissipation.

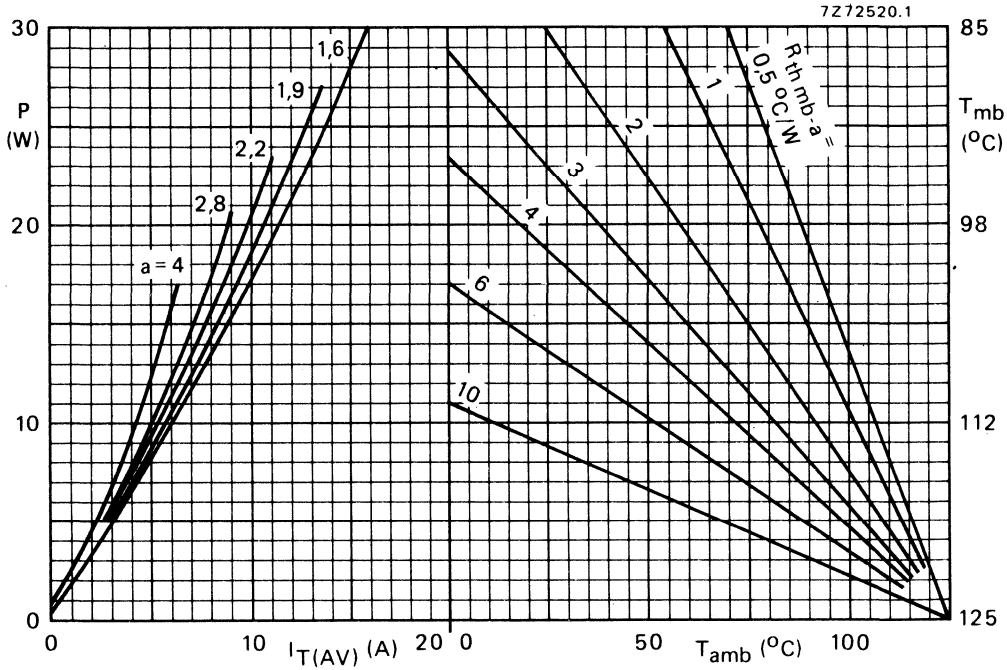
7Z72520.1
P
(W)
30
20
10
0
85
98
112
125
T_{mb}
(°C)
a = 4
2,8
2,2
1,9
1,6
10
6
4
3
2
1
0,5 °C/W
$R_{th\ mb-a}$ =
0
10
$I_{T(AV)}$ (A)
20
0
50
T_{amb} (°C)
100

Fig. 2.

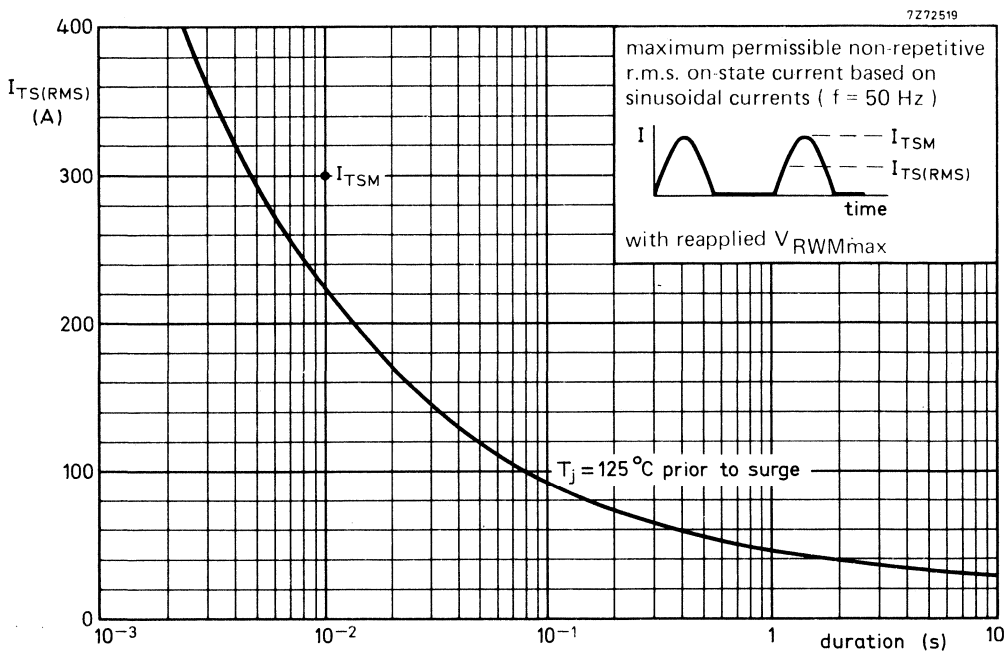
7Z72519
$I_{TS(RMS)}$
(A)
400
300
200
100
0
I_{TSM}
maximum permissible non-repetitive r.m.s. on-state current based on sinusoidal currents (f = 50 Hz)
I
I_{TSM}
$I_{TS(RMS)}$
time
with reapplied V_{RWMmax}
T_j = 125 °C prior to surge
10^{-3}
10^{-2}
10^{-1}
1
duration (s)
10

Fig. 3.

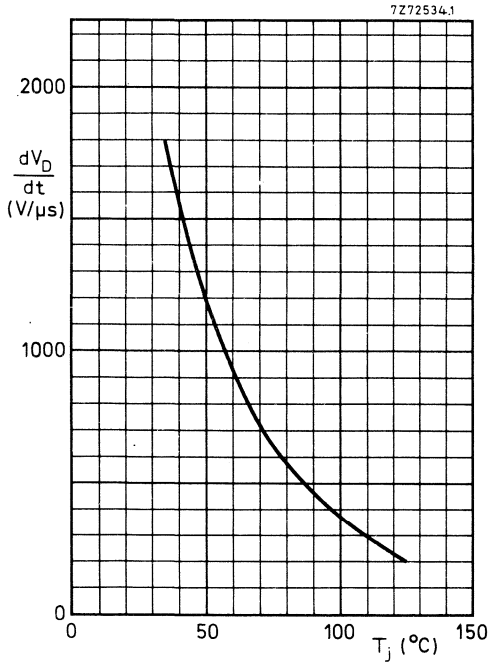

Fig. 4 Maximum rate of rise of off-state voltage that will not trigger any device (exponential method) as a function of T_j.

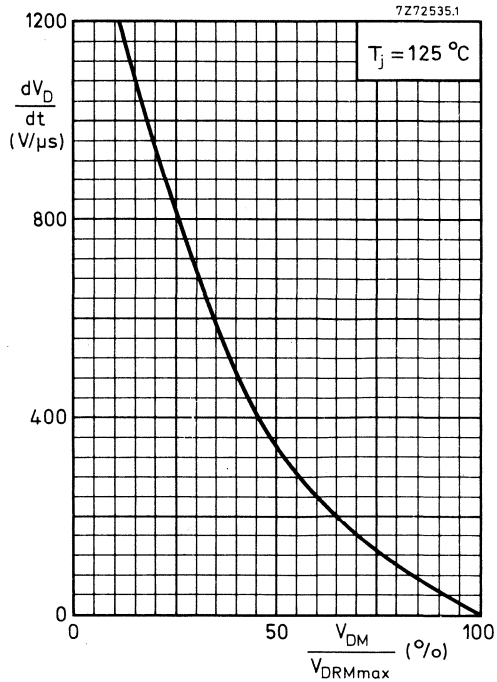

Fig. 5 Maximum rate of rise of off-state voltage that will not trigger any device (exponential method) as a function of applied voltage.

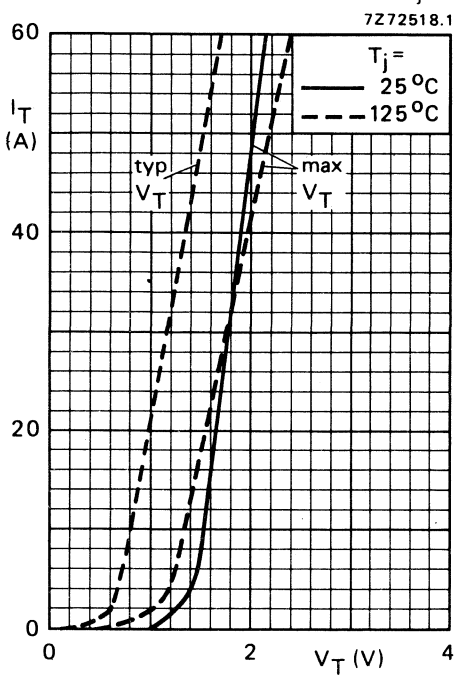

Fig. 6.

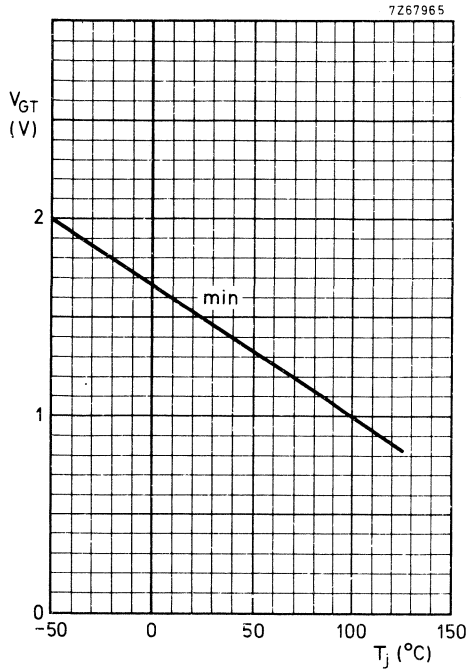

Fig. 7 Minimum gate voltage that will trigger all devices as a function of T_j.

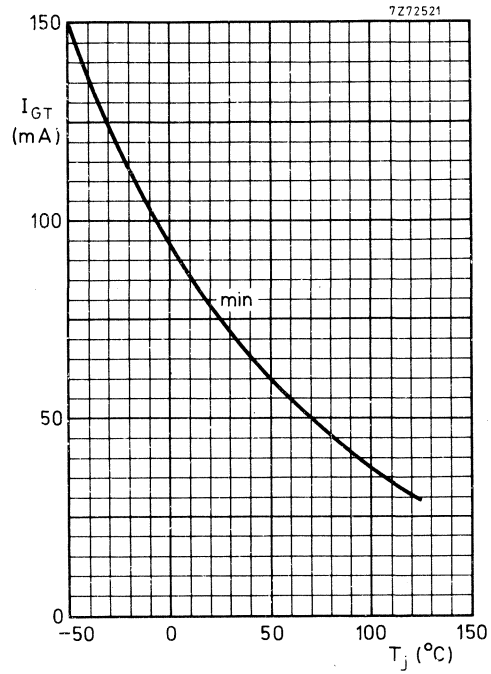

Fig. 8 Minimum gate current that will trigger all devices as a function of T_j.

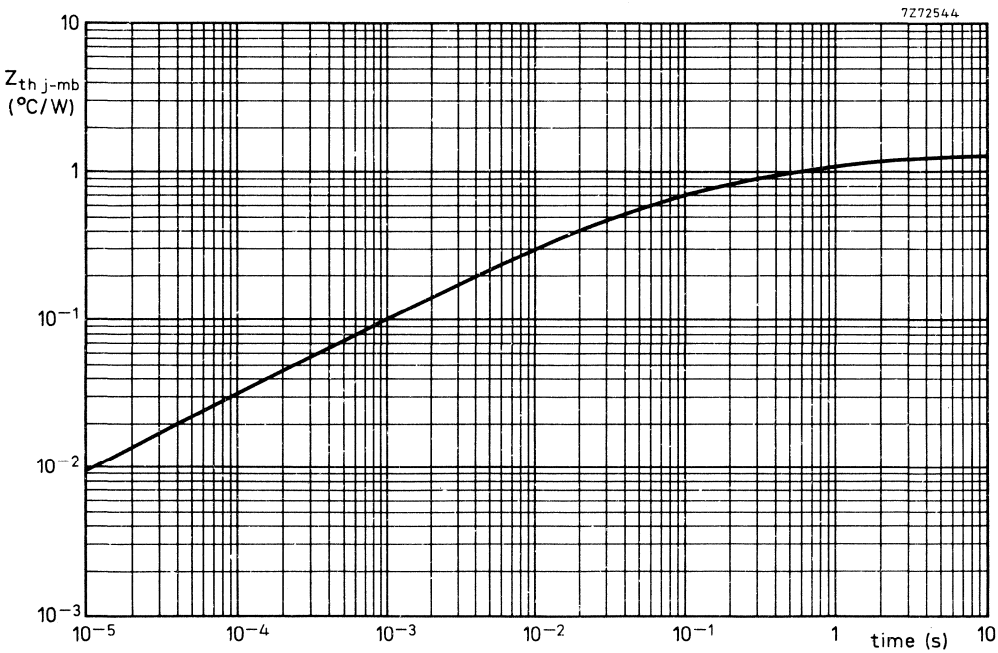

Fig. 9.

FAST GATE TURN-OFF THYRISTORS

Thyristors in TO-220AB envelopes capable of being turned both on and off via the gate. They are suitable for use in high-frequency inverters, resonant power supplies, motor control, horizontal deflection systems etc. The devices have no reverse blocking capability. For reverse blocking operation use with a series diode, for reverse conducting operation use with an anti parallel diode.

QUICK REFERENCE DATA

			BTW58–1000R	1300R	1500R	
Repetitive peak off-state voltage	V_{DRM}	max.	1000	1300	1500	V
Non-repetitive peak on-state current	I_{TSM}	max.		50		A
Controllable anode current	I_{TCRM}	max.		25		A
Average on-state current	$I_{T(AV)}$	max.		6.5		A
Fall time	t_f	<		250		ns

MECHANICAL DATA

Dimensions in mm

Fig.1 TO-220AB

Pinning:
1 = Cathode
2 = Anode
3 = Gate

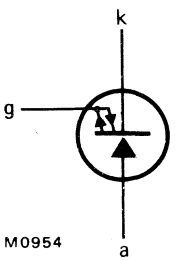

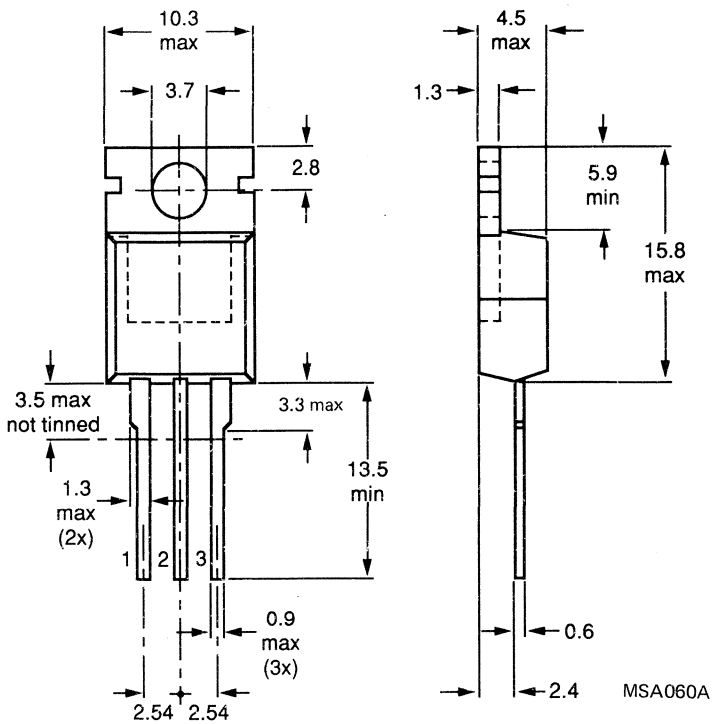

Net mass: 2 g

Note: The exposed metal mounting base is directly connected to the anode.

Accessories supplied on request: see data sheets Mounting instructions and accessories for TO-220 envelopes.

RATINGS

Limiting values in accordance with the Absolute Maximum System (IEC134)

Anode to cathode

			BTW58–1000R	1300R	1500R	
Transient off-state voltage	V_{DSM}	max.	1200	1500	1650	V*
Repetitive peak off-state voltage	V_{DRM}	max.	1000	1300	1500	V*
Working off-state voltage	V_{DW}	max.	650	1200	1300	V*
Continuous off-state voltage	V_D	max.	650	750	800	V*

Average on-state current (averaged over any 20 ms period) up to T_{mb} = 85 °C	$I_{T(AV)}$	max.	6.5	A
Controllable anode current	I_{TCRM}	max.	25	A
Non-repetitive peak on-state current t = 10 ms; half-sinewave; T_j = 120 °C prior to surge	I_{TSM}	max.	50	A
I^2t for fusing; t = 10 ms	I^2t	max.	12.5	A^2s
Total power dissipation up to T_{mb} = 25 °C	P_{tot}	max.	65	W

Gate to cathode

Repetitive peak on-state current T_j = 120 °C prior to surge				
gate-cathode forward; t = 10 ms; half-sinewave	I_{GFM}	max.	25	A
gate-cathode reverse; t = 20 μs	I_{GRM}	max.	25	A
Average power dissipation (averaged over any 20 ms period)	$P_{G(AV)}$	max.	2.5	W

Temperatures

Storage temperature	T_{stg}		−40 to +150	°C
Operating junction temperature	T_j	max.	120	°C

THERMAL RESISTANCE

From junction to mounting base	$R_{th\ j\text{-}mb}$	=	1.5	K/W
From mounting base to heatsink with heatsink compound	$R_{th\ mb\text{-}h}$	=	0.3	K/W
with 56367 alumina insulator and heatsink compound (clip-mounted)	$R_{th\ mb\text{-}h}$	=	0.8	K/W

*Measured with gate-cathode connected together.

CHARACTERISTICS

Anode to cathode

On-state voltage I_T = 5 A; I_G = 0.2 A; T_j = 120 °C	V_T	<	3.0	V*
Rate of rise of off-state voltage that will not trigger any off-state device; exponential method V_D = 2/3 V_{Dmax}; V_{GR} = 5 V; T_j = 120 °C	dV_D/dt	<	10	kV/µs
Rate of rise of off-state voltage that will not trigger any device following conduction, linear method I_T = 5 A; V_D = V_{DRMmax}; V_{GR} = 10 V; T_j = 120 °C	dV_D/dt	<	1.5	kV/µs
Off-state current V_D = V_{Dmax}; T_j = 120 °C	I_D	<	3.0	mA
Latching current; T_j = 25 °C	I_L	typ.	1.0	A**

Gate to cathode

Voltage that will trigger all devices V_D = 12 V; T_j = 25 °C	V_{GT}	>	1.5	V
Current that will trigger all devices V_D = 12 V; T_j = 25 °C	I_{GT}	>	200	mA
Minimum reverse breakdown voltage I_{GR} = 1.0 mA	$V_{(BR)GR}$	>	10	V

Switching characteristics (resistive load)

Turn-on when switched to I_T = 5 A from V_D = 250 V with I_{GF} = 0.5 A; T_j = 25 °C				
delay time	t_d	<	0.25	µs
rise time	t_r	<	1.0	µs

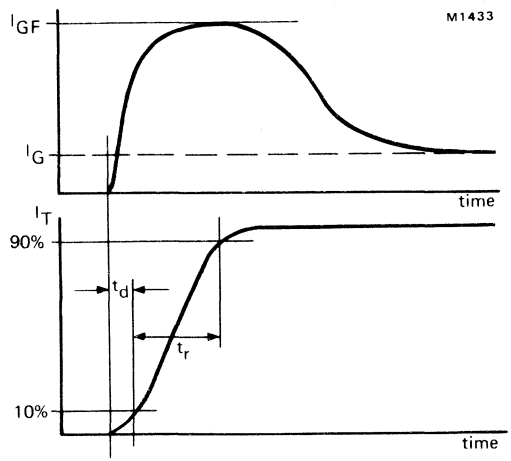

Fig.2 Waveforms

* Measured under pulse conditions to avoid excessive dissipation.

** Below latching level the device behaves like a transistor with a gain dependent on current.

Switching characteristics (inductive load)

Turn-off when switched from I_T = 5 A to V_D = V_{DRMmax}.
V_{GR} = 10 V; $L_G \leqslant 1.0\ \mu H$; $L_S \leqslant 0.25\ \mu H$; T_j = 25 °C

storage time	t_s	<	0.5	μs
fall time	t_f	<	0.25	μs
peak reverse gate current	I_{GR}	<	6	A

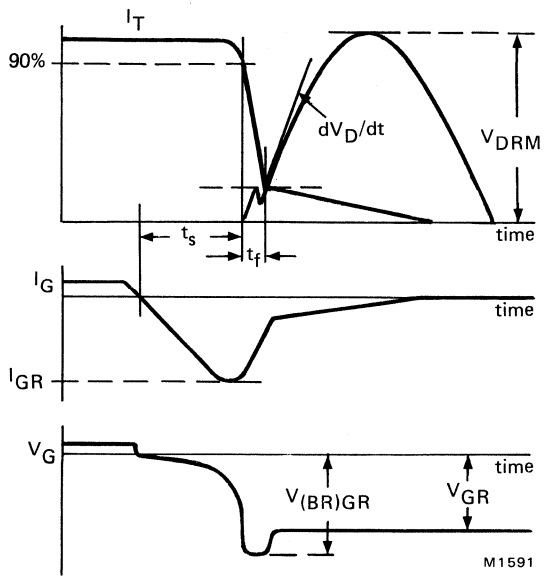

Fig.3 Waveforms.

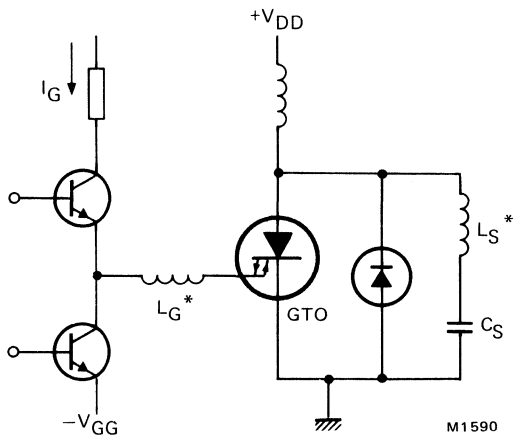

Fig.4 Inductive load test circuit

*Indicates stray series inductance only.

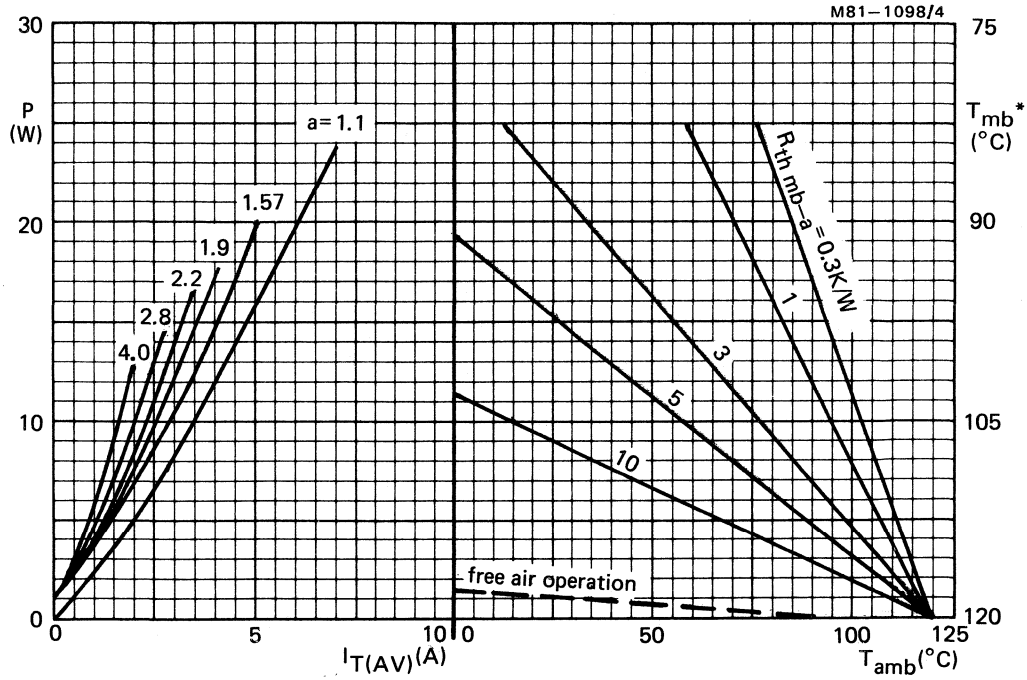

Fig.5 The right-hand part shows the interrelationship between the power (derived from the left-hand part) and the maximum permissible temperatures.

$$a = \text{form factor} = \frac{I_{T(RMS)}}{I_{T(AV)}}$$

P = power excluding switching losses.

*T_{mb} scale is for comparison purposes and is correct only for $R_{th\ mb\text{-}a} < 9.6$ K/W.

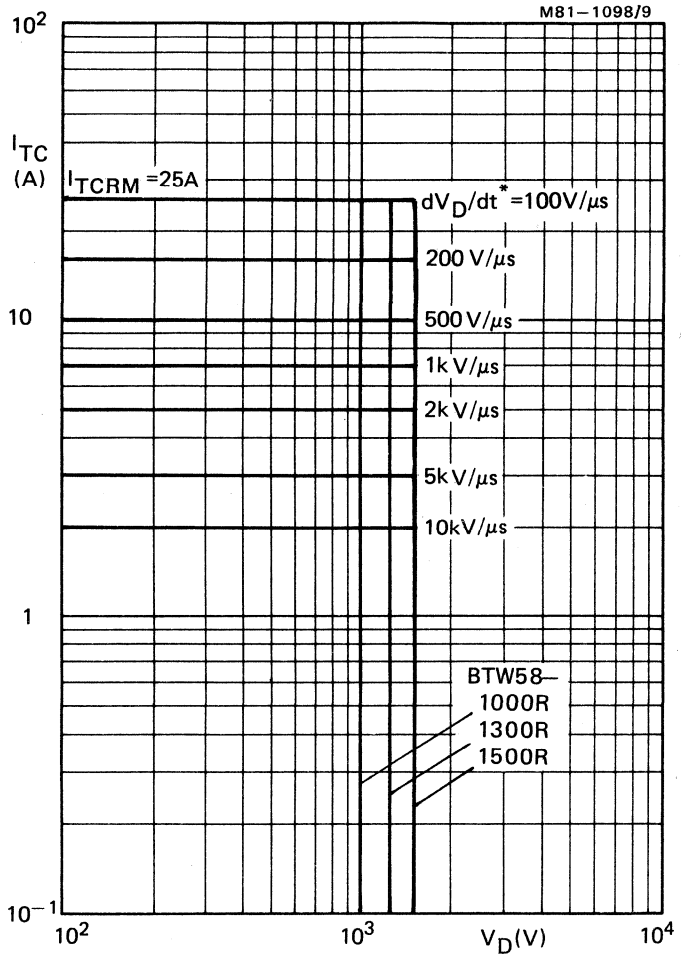

Fig.6 Anode current which can be turned off versus anode voltage; inductive load; V_{GR} = 10 V; $L_G \leqslant 1.0\ \mu H$; $L_S \leqslant 0.25\ \mu H$; T_j = 85 °C.
*dV_D/dt is calculated from I_T/C_S.

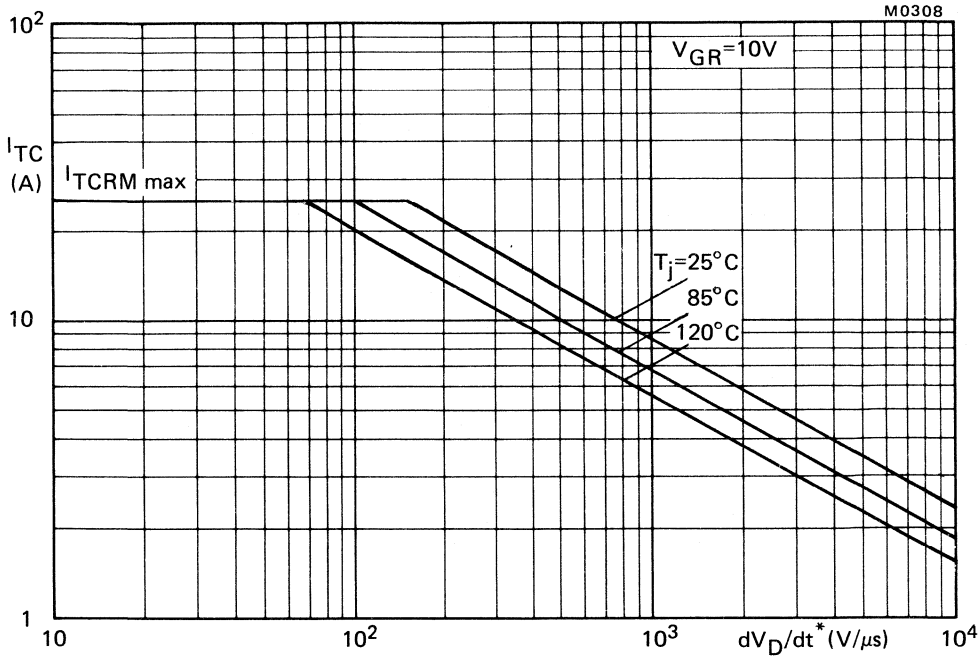

Fig.7 Anode current which can be turned off versus applied dV_D/dt^*; inductive load; V_{GR} = 10 V; $L_G \leqslant 1.0\ \mu H$; $L_S \leqslant 0.25\ \mu H$. *$dV_D/dt$ is calculated from I_T/C_S.

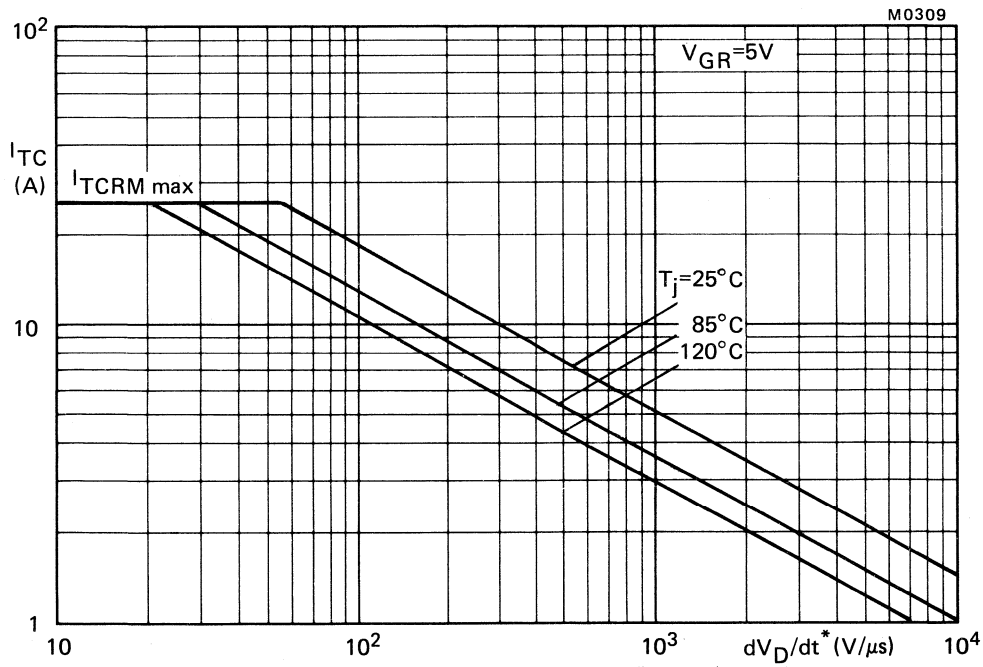

Fig.8 Anode current which can be turned off versus applied dV_D/dt^*; inductive load; V_{GR} = 5 V; $L_G \leqslant 1.0\ \mu H$; $L_S \leqslant 0.25\ \mu H$. *$dV_D/dt$ is calculated from I_T/C_S.

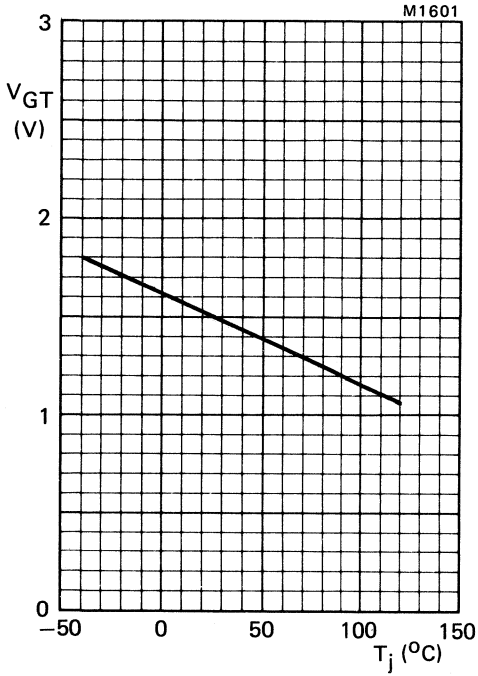

Fig.9 Minimum gate voltage that will trigger all devices as a function of junction temperature; V_D = 12 V.

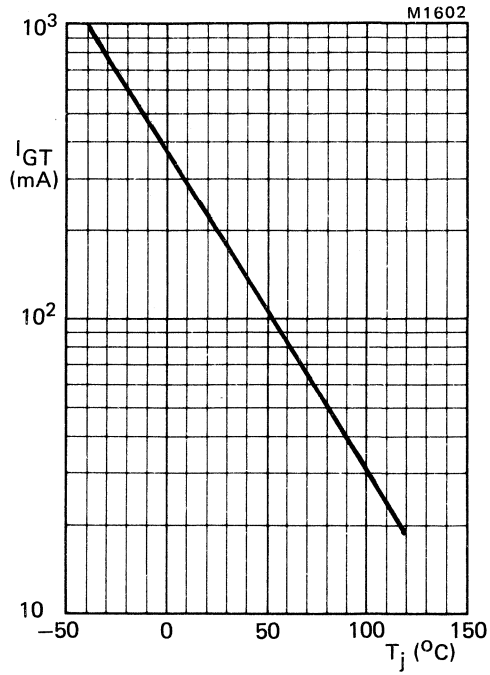

Fig.10 Minimum gate current that will trigger all devices as a function of junction temperature; V_D = 12 V.

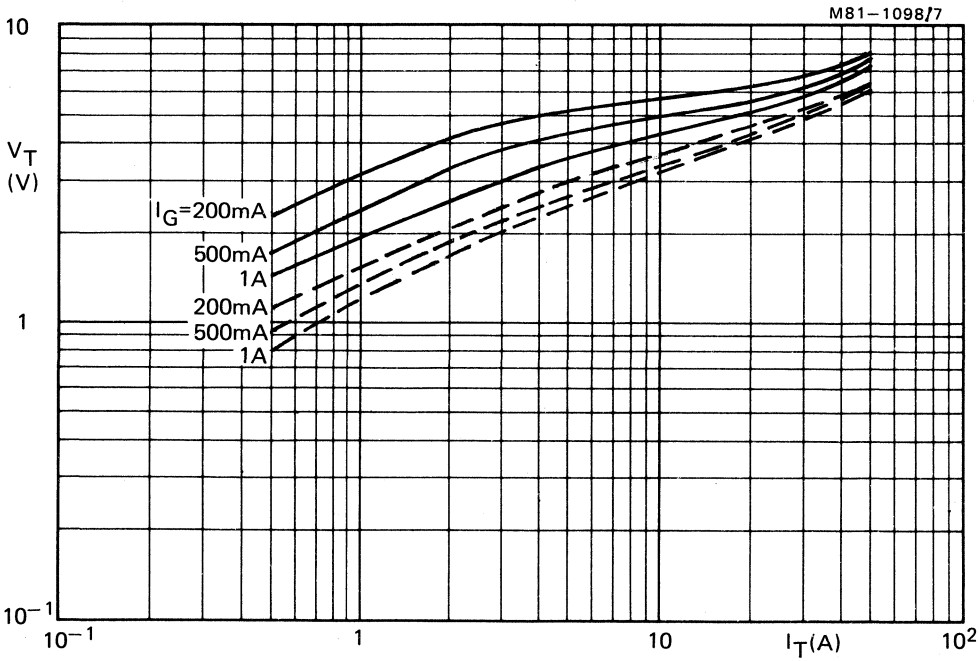

Fig.11 Maximum V_T versus I_T; —— T_j = 25 °C; – – – – T_j = 120 °C.

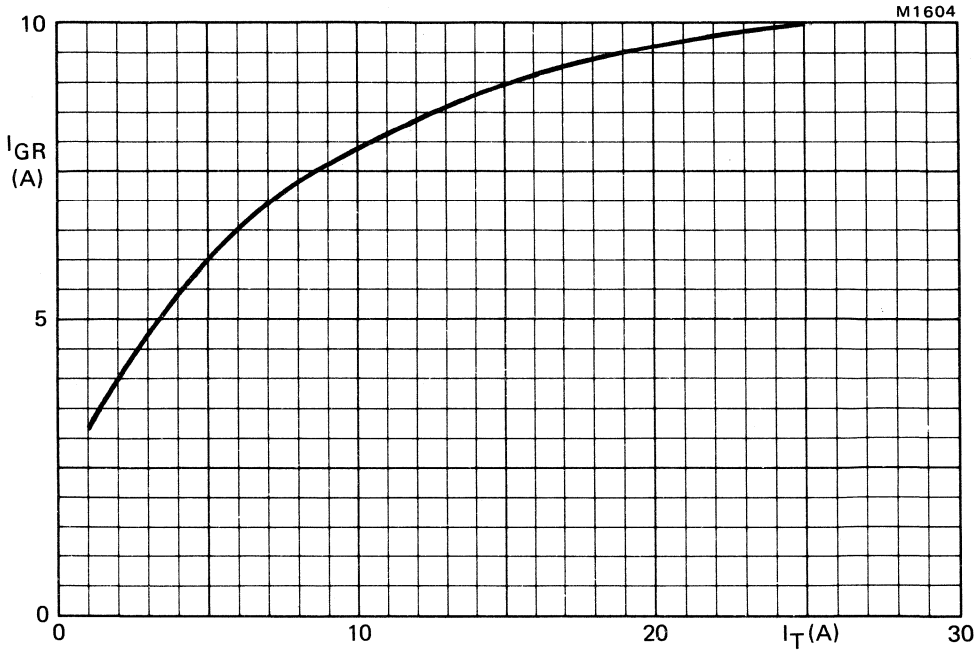

Fig.12 Peak reverse gate current versus anode current at turn-off; inductive load; V_{GR} = 10 V; I_G = 0.2 A; L_G = 0.8 μH; T_j = 120 °C; maximum values.

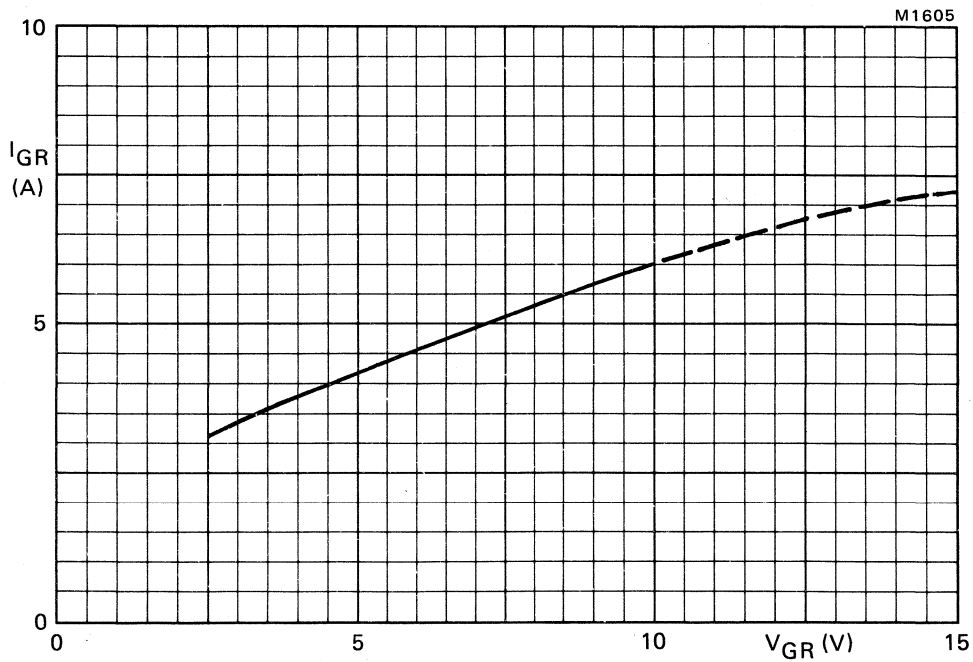

Fig.13 Peak reverse gate current versus applied reverse gate voltage; inductive load; I_T = 5 A; I_G = 0.2 A; L_G = 0.8 μH; T_j = 120 °C; maximum values.

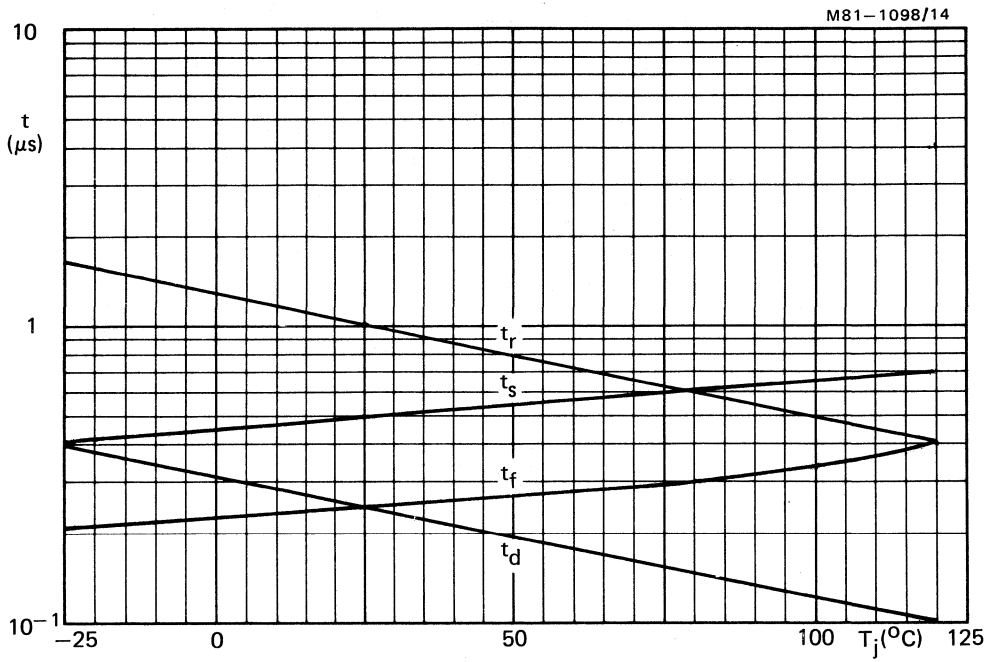

Fig.14 Switching times as a function of junction temperature; $V_D \geqslant 250$ V; $I_T = 5$ A; $I_{GF} = 0.5$ A; $V_{GR} = 10$ V; $I_G = 0.2$ A; $L_G = 0.8$ μH; maximum values.

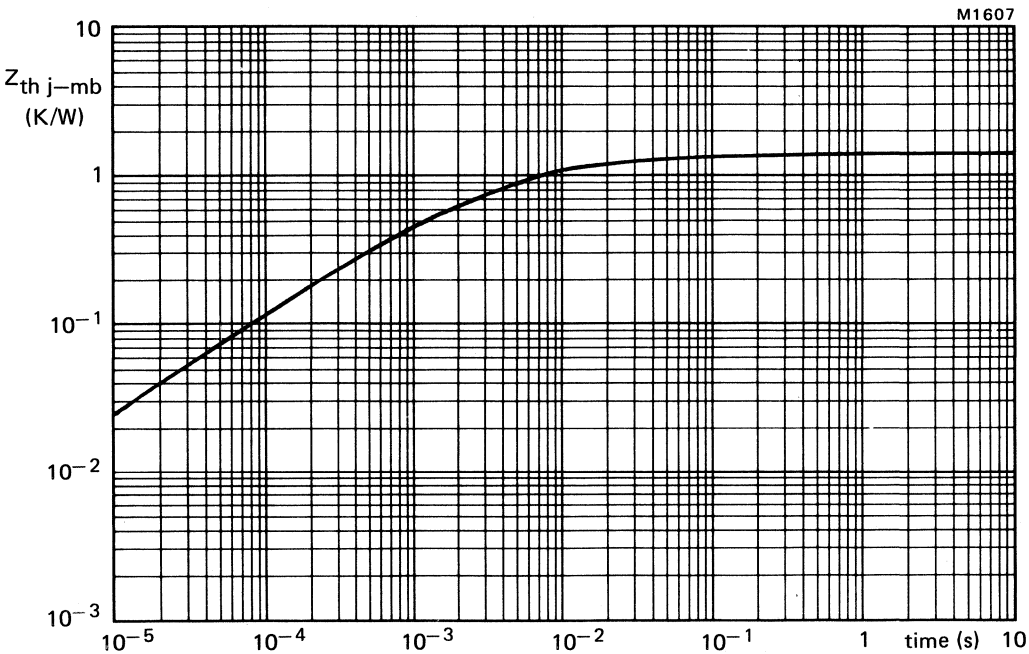

Fig.15 Transient thermal impedance.

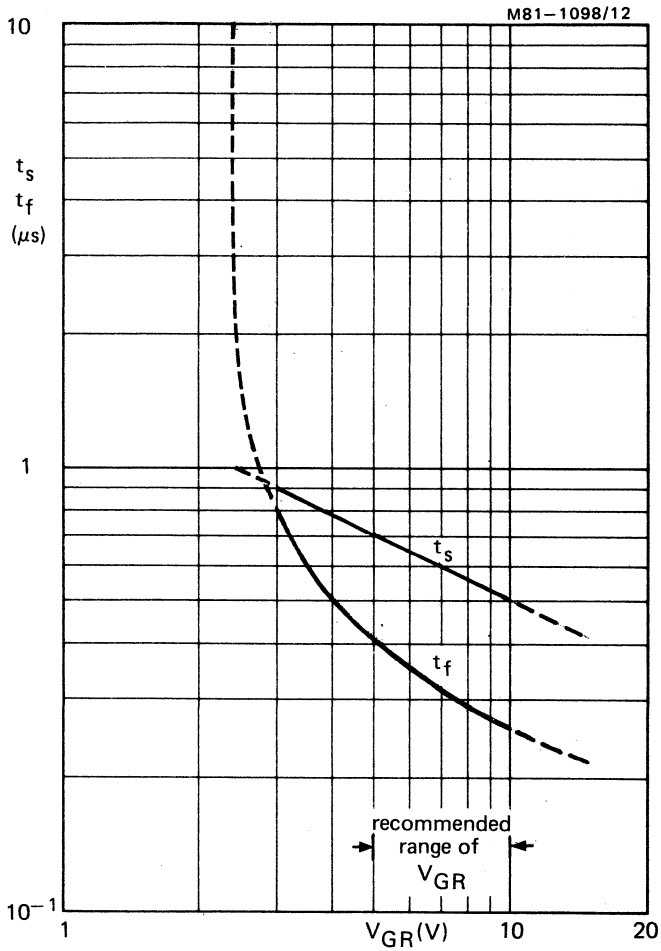

Fig.16 Storage and fall times versus applied reverse gate voltage; inductive load; I_T = 5 A; I_G = 0.2 A; L_G = 0.8 μH; T_j = 25 °C; maximum values.

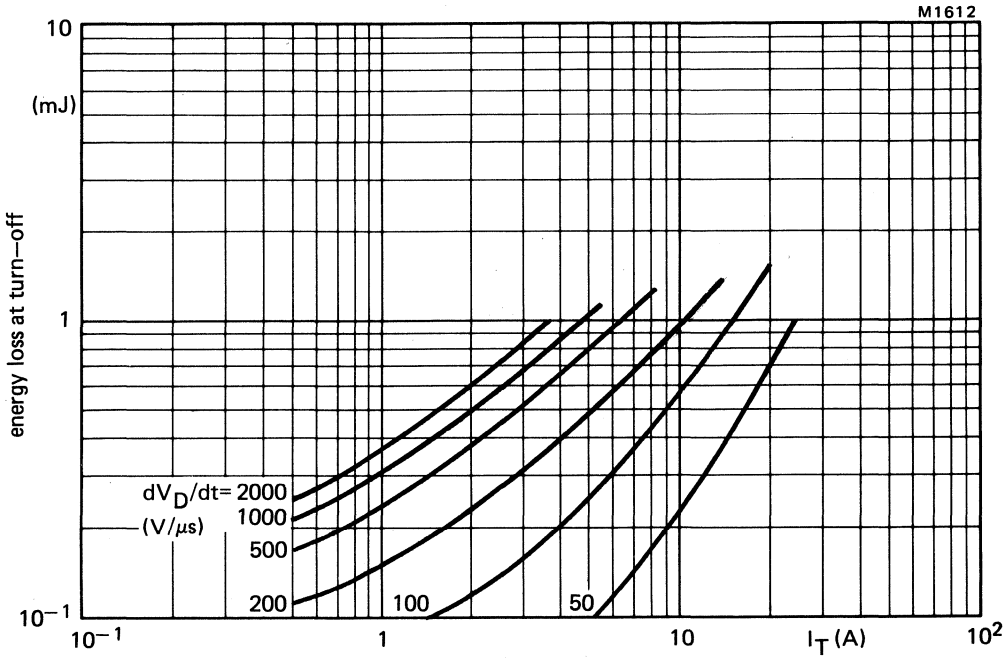

Fig.17 Maximum energy loss at turn-off (per cycle) as a function of anode current and applied dV_D/dt (calculated from I_T/C_S); reapplied voltage sinsusoidal up to V_{DRM} = 1200 V; V_{GR} = 10 V; I_G = 0.2 A; $L_G \leqslant 1.0\ \mu H$; $L_S \leqslant 0.25\ \mu H$; T_j = 120 °C.

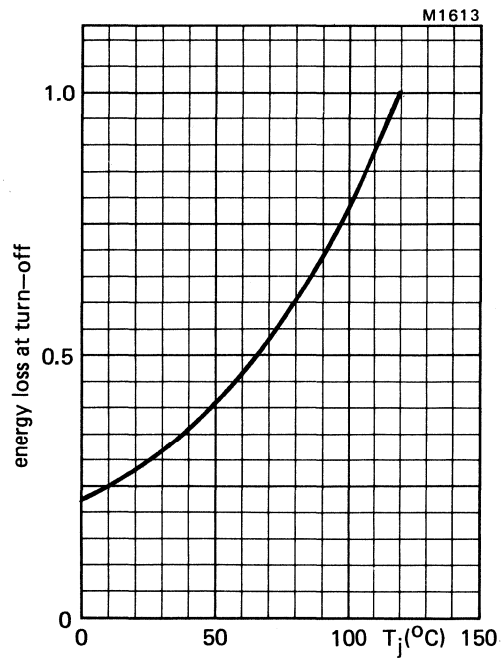

Fig.18 Energy loss at turn off as a function of junction temperature; I_G = 0.2 A; V_{GR} = 10 V. Normalised to T_j = 120 °C.

THYRISTORS

Glass-passivated silicon thyristors in metal envelopes, intended for use in power control circuits (e.g. light and motor control) and power switching systems.
The series consistos of reverse polarity types (anode to stud) identified by a suffix R: BTY79-400R to 1000R.

QUICK REFERENCE DATA

		BTY79-400R	500R	600R	800R	1000R	
Repetitive peak voltages V_{DRM}/V_{RRM}	max.	400	500	600	800	1000	V
Average on-state current				$I_{T(AV)}$	max.	10	A
R.M.S. on-state current				$I_{T(RMS)}$	max.	16	A
Non-repetitive peak on-state current				I_{TSM}	max.	150	A

MECHANICAL DATA

Dimensions in mm

Fig. 1 TO-64: with 10-32 UNF stud (ϕ 4,83 mm).

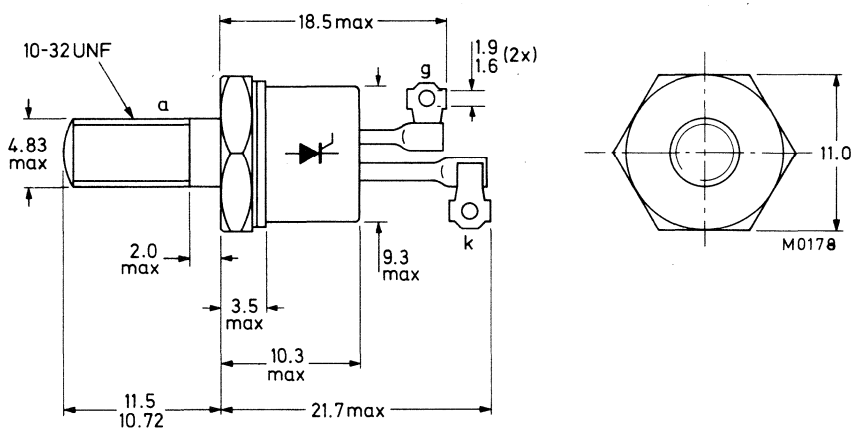

Net mass: 7 g
Diameter of clearance hole: max. 5,2 mm
Accessories supplied on request:
see ACCESSORIES section

Torque on nut: min. 0,9 Nm (9 kg cm)
max. 1,7 Nm (17 kg cm)

Supplied with device: 1 nut, 1 lock washer.
Nut dimensions: across the flats: 9,5 mm.

Products approved to CECC 50 011-006 available on request.

RATINGS

Limiting values in accordance with the Absolute Maximum System (IEC 134)

Anode to cathode

			BTY79–400R	500R	600R	800R	1000R	
Non-repetitive peak off-state voltage ($t \leqslant 10$ ms)	V_{DSM}**	max.	500	1100	1100	1100	1100	V
Non-repetitive peak reverse voltage ($t \leqslant 5$ ms)	V_{RSM}	max.	500	600	720	960	1100	V
Repetitive peak voltages	V_{DRM}/V_{RRM}	max.	400	500	600	800	1000	V
Crest working voltages	V_{DWM}/V_{RWM}	max.	400	500	600	800	1000	V*

Average on-state current (averaged over any 20 ms period) up to T_{mb} = 85 °C	$I_{T(AV)}$	max.	10	A
R.M.S. on-state current	$I_{T(RMS)}$	max.	16	A
Repetitive peak on-state current	I_{TRM}	max.	75	A
Non-repetitive peak on-state current; t = 10 ms; half sine-wave; T_j = 125 °C prior to surge; with reapplied V_{RWMmax}	I_{TSM}	max.	150	A
I^2t for fusing (t = 10 ms)	I^2t	max.	112	A^2s
Rate of rise of on-state current after triggering with I_G = 150 mA to I_T = 30 A; dI_G/dt = 0,25 A/μs	dI_T/dt	max.	50	A/μs

Gate to cathode

Average power dissipation (averaged over any 20 ms period)	$P_{G(AV)}$	max.	0,5	W
Peak power dissipation	P_{GM}	max.	5	W

Temperatures

Storage temperature	T_{stg}		−55 to +125	°C
Junction temperature	T_j	max.	125	°C

THERMAL RESISTANCE

From junction to mounting base	$R_{th\ j\text{-}mb}$	=	1,8	°C/W
From mounting base to heatsink with heatsink compound	$R_{th\ mb\text{-}h}$	=	0,5	°C/W
From junction to ambient in free air	$R_{th\ j\text{-}a}$	=	45	°C/W
Transient thermal impedance (t = 1 ms)	$Z_{th\ j\text{-}mb}$	=	0,1	°C/W

* To ensure thermal stability: $R_{th\ j\text{-}a} < 4$ °C/W (d.c. blocking) or < 8 °C/W (a.c.). For smaller heat-sinks $T_{j\ max}$ should be derated. For a.c. see Fig. 3.

** Although not recommended, higher off-state voltages may be applied without damage, but the thyristor may switch into the on-state. The rate of rise of on-state current should not exceed 100 A/μs.

CHARACTERISTICS

Anode to cathode

On-state voltage (measured under pulse conditions) I_T = 20 A; T_j = 25 °C	V_T	<	2	V
Rate of rise of off-state voltage that will not trigger any device; exponential method; V_D = 2/3 V_{DRMmax}; T_j = 125 °C	dV_D/dt	<	200	V/μs
Reverse current V_R = V_{RWMmax}; T_j = 125 °C	I_R	<	3	mA
Off-state current V_D = V_{DWMmax}; T_j = 125 °C	I_D	<	3	mA
Latching current; T_j = 25 °C	I_L	<	150	mA
Holding current; T_j = 25 °C	I_H	<	75	mA

Gate to cathode

Voltage that will trigger all devices V_D = 6 V; T_j = 25 °C	V_{GT}	>	1.5	V
Voltage that will not trigger any device V_D = V_{DRMmax}; T_j = 125 °C	V_{GD}	<	200	mV
Current that will trigger all devices V_D = 6 V; T_j = 25 °C	I_{GT}	>	30	mA
On request (see Ordering Note)	I_{GT}	>	20	mA

Switching characteristics

Gate-controlled turn-on time (t_{gt} = t_d + t_r) when switched from V_D = V_{DRMmax} to I_T = 40 A; I_{GT} = 100 mA; dI_G/dt = 5 A/μs; T_j = 25 °C	t_{gt}	typ.	2	μs
Circuit-commutated turn-off time when switched from I_T = 40 A to V_R > 50 V with $-dI_T/dt$ = 10 A/μs; dV_D/dt = 50 V/μs; T_j = 115 °C	t_q	typ.	35	μs

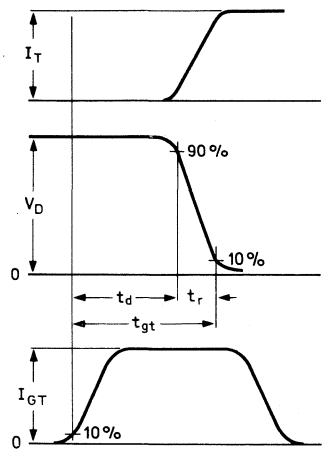

Fig.2a Gate-controlled turn-on time definition.

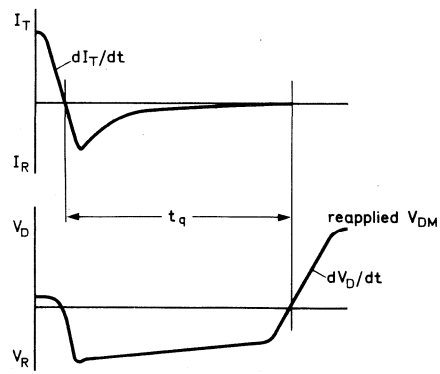

Fig.2b Circuit-commutated turn-off time definition.

OPERATING NOTE

The terminals should neither be bent nor twisted; they should be soldered into the circuit so that there is no strain on them.
During soldering the heat conduction to the junction should be kept to a minimum.

ORDERING NOTE

Types with low gate trigger current, $I_{GT} > 20$ mA, are available on request. Add suffix A to the type number when ordering: e.g. BTY79A-400R.

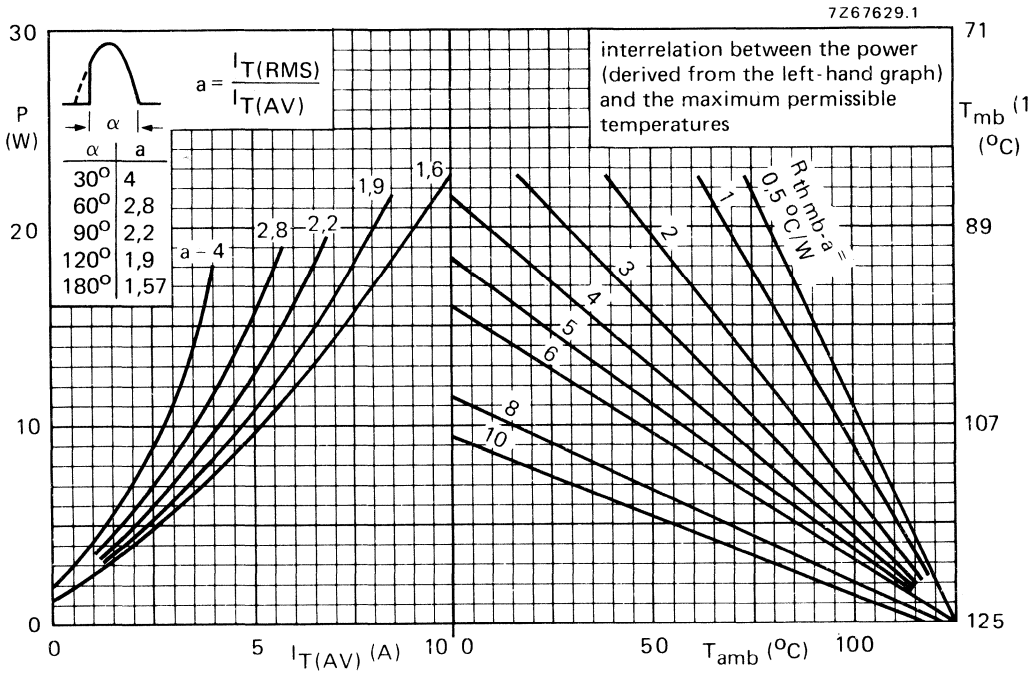

Fig. 3 (1) T_{mb}-scale is for comparison purposes only and is correct only for $R_{th\ mb-a} \leqslant 6$ °C/W.

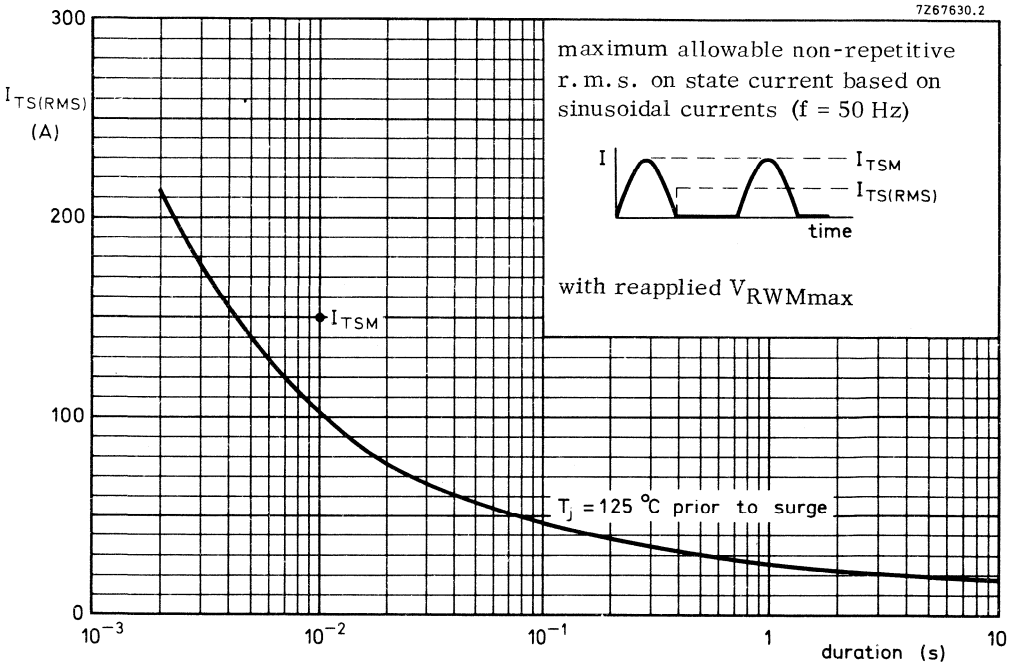
7Z67630.2
300
200
100
0
$I_{TS(RMS)}$
(A)
maximum allowable non-repetitive r.m.s. on state current based on sinusoidal currents (f = 50 Hz)
I
I_{TSM}
$I_{TS(RMS)}$
time
with reapplied V_{RWMmax}
I_{TSM}
T_j = 125 °C prior to surge
10^{-3}
10^{-2}
10^{-1}
1
10
duration (s)

Fig. 4.

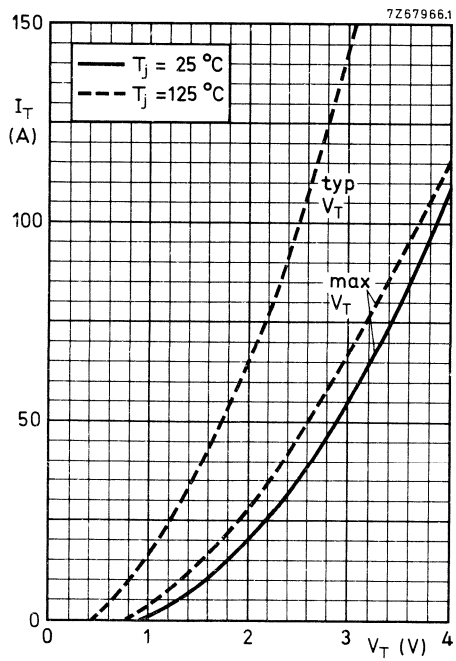
7Z67966.1
150
100
50
0
I_T
(A)
T_j = 25 °C
T_j = 125 °C
typ
V_T
max
V_T
0
1
2
3
4
V_T (V)

Fig. 5.

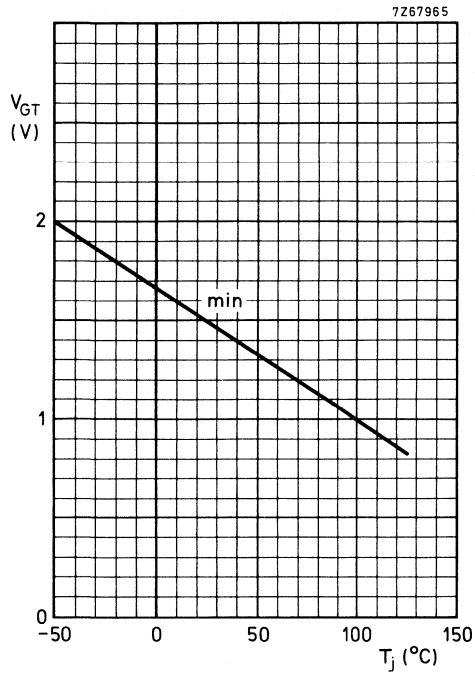

Fig. 6 Minimum gate voltage that will trigger all devices as a function of T_j.

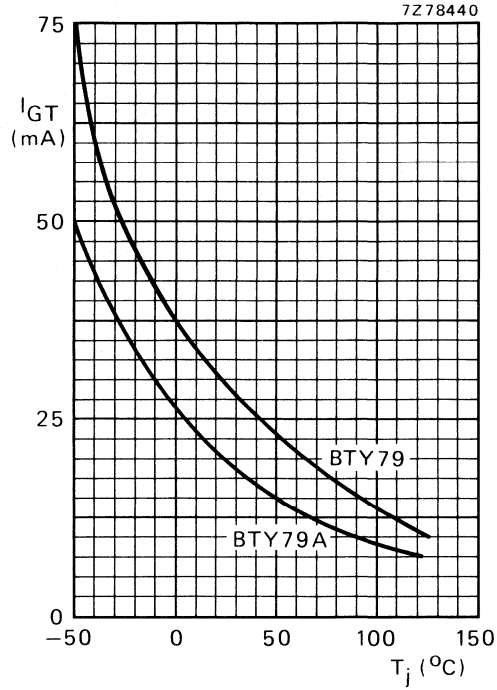

Fig. 7 Minimum gate current that will trigger all devices as a function of T_j.

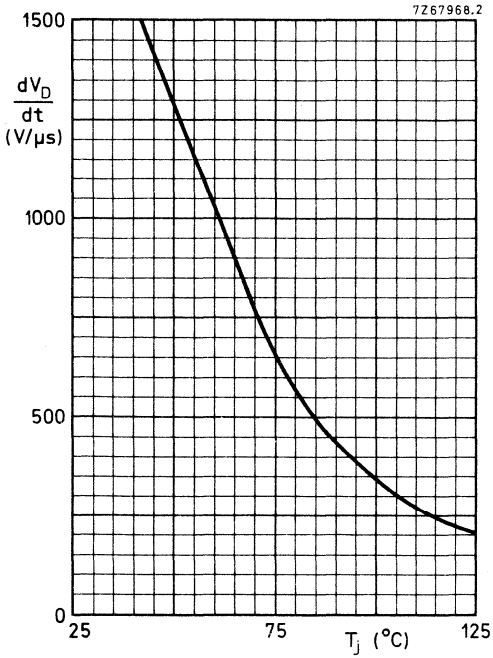

Fig. 8 Maximum rate of rise of off-state voltage that will not trigger any device (exponential method) as a function of T_j.

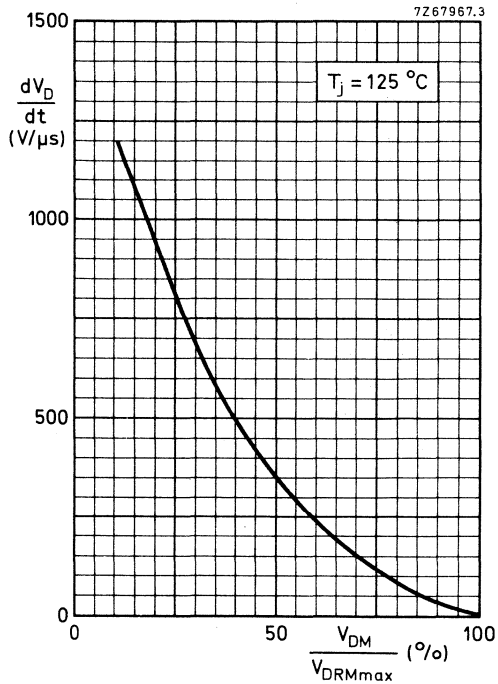

Fig. 9 Maximum rate of rise of off-state voltage that will not trigger any device (exponential method) as a function of applied voltage.

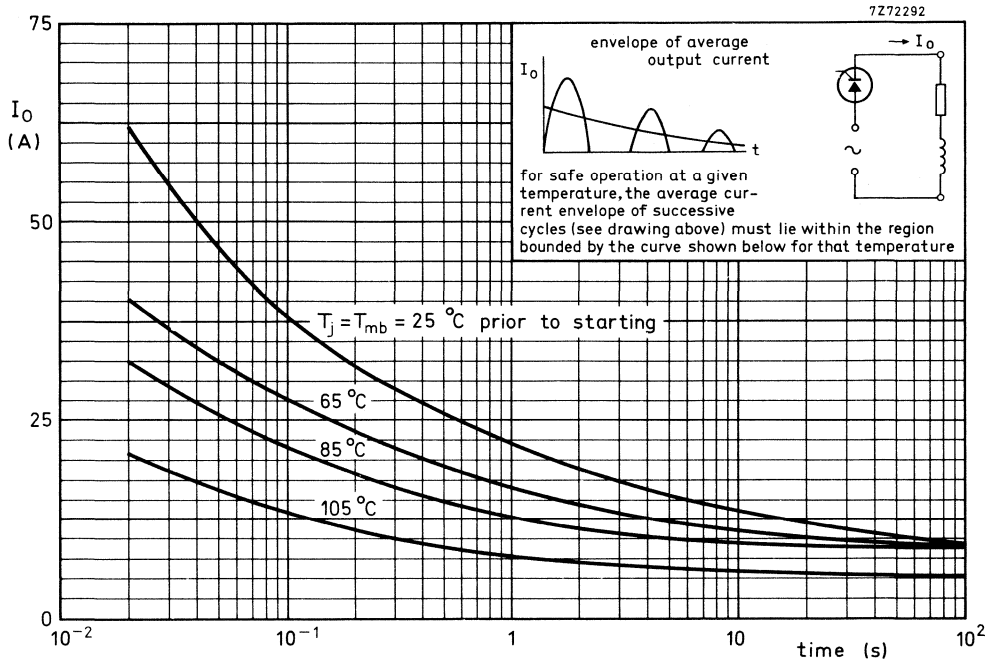

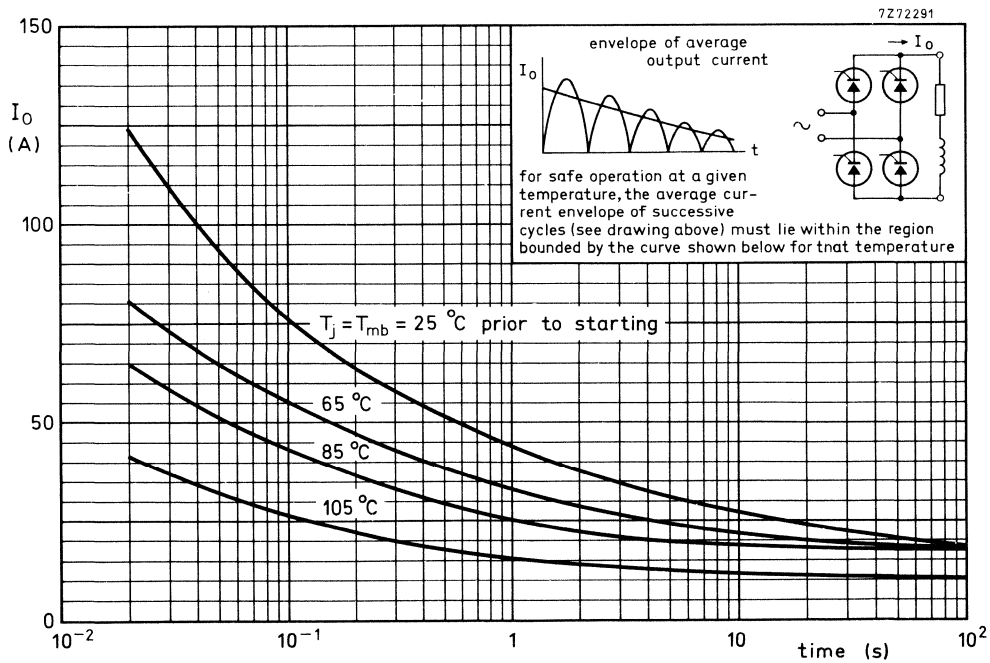

Fig. 10 Limits for starting or inrush currents.

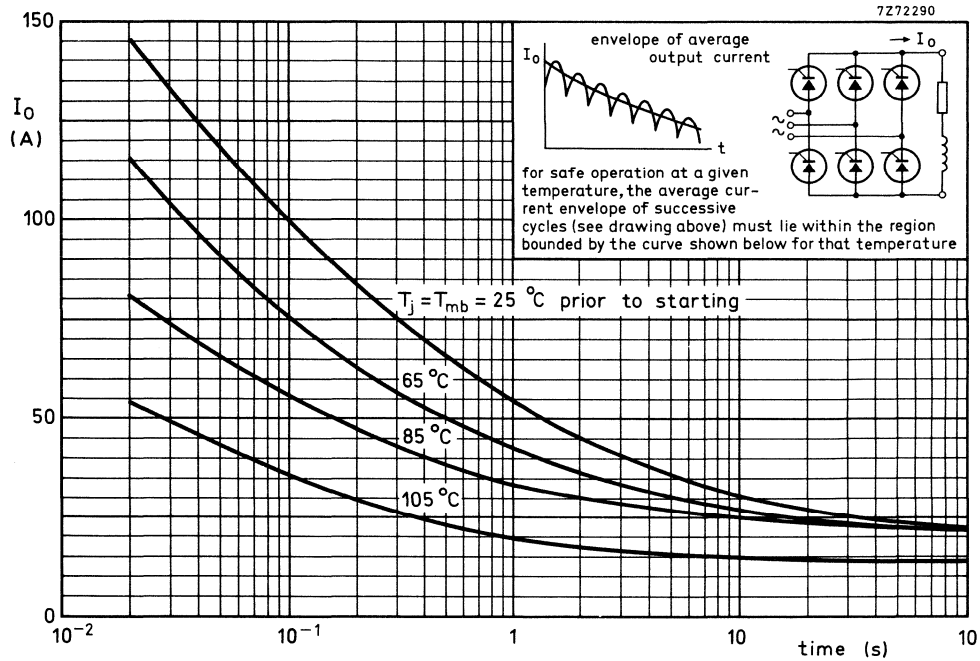

Fig. 11 Limits for starting or inrush currents.

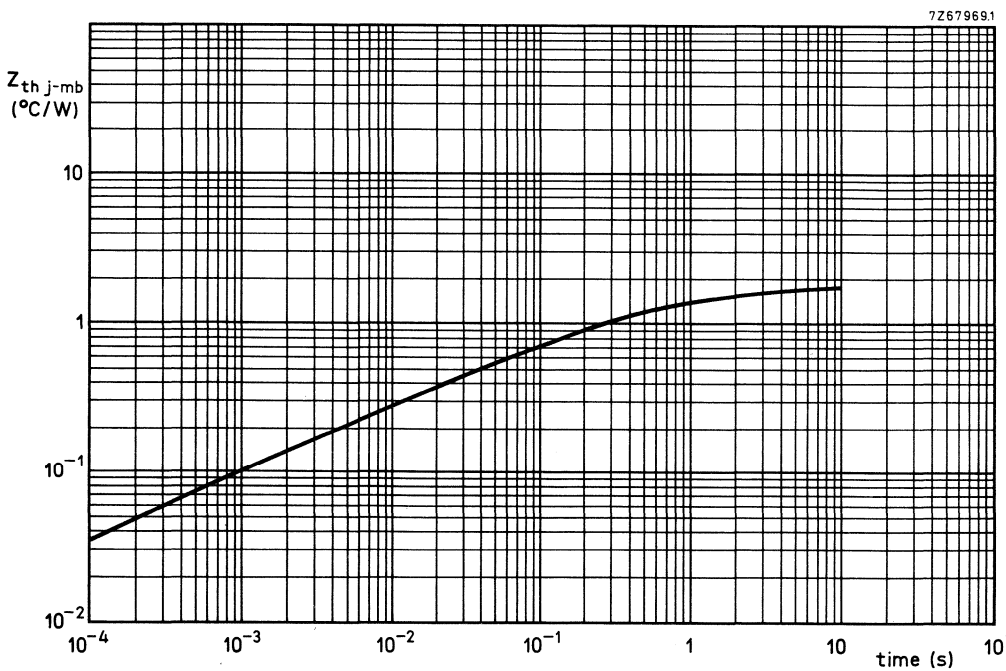

Fig. 12.

THYRISTORS

Glass-passivated silicon thyristors in metal envelopes, intended for power control and power switching applications.
The series consists of reverse polarity types (anode to stud) identified by a suffix R: BTY91-400R to 800R.

QUICK REFERENCE DATA

			BTY91-400R	500R	600R	800R	
Repetitive peak voltages	V_{DRM}/V_{RRM}	max.	400	500	600	800	V

Average on-state current	$I_{T(AV)}$	max.	16	A
R.M.S. on-state current	$I_{T(RMS)}$	max.	25	A
Non-repetitive peak on-state current	I_{TSM}	max.	200	A

MECHANICAL DATA

Dimensions in mm

Fig. 1 TO-48: with ¼ in x 28 UNF stud (ϕ 6,35 mm).

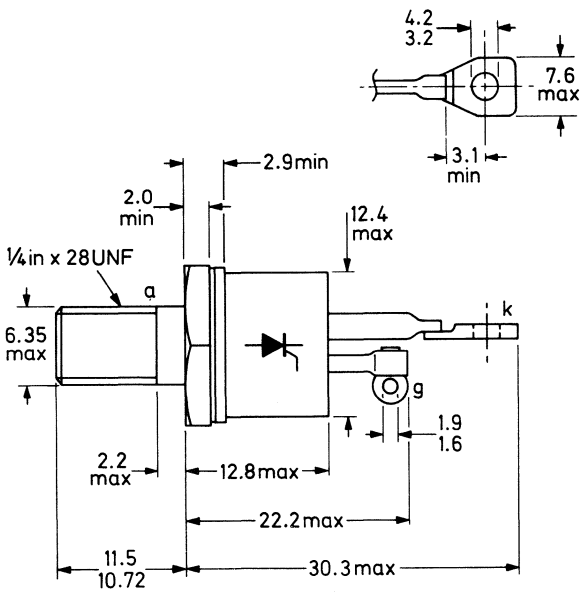

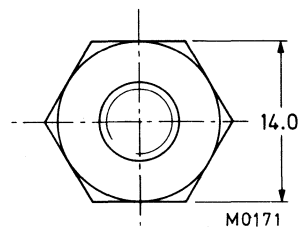

Net mass: 14 g
Diameter of clearance hole: max. 6,5 mm
Accessories supplied on request:
see ACCESSORIES section

Torque on nut: min. 1,7 Nm (17 kg cm)
max. 3,5 Nm (35 kg cm)
Supplied with the device:
1 nut, 1 lock washer
Nut dimensions across the flats: 11,1 mm

RATINGS

Limiting values in accordance with the Absolute Maximum System (IEC 134)

Anode to cathode

			BTY91-400R	500R	600R	800R	
Non-repetitive peak off-state voltage ($t \leqslant 10$ ms)	V_{DSM}	max.	500	850	850	850	V
Non-repetitive peak reverse voltage ($t \leqslant 5$ ms)	V_{RSM}	max.	500	600	720	960	V
Repetitive peak voltages	V_{DRM}/V_{RRM}	max.	400	500	600	800	V
Crest working voltages	V_{DWM}/V_{RWM}	max.	400	500	600	800	V *

Average on-state current (averaged over any 20 ms period) up to T_{mb} = 77 °C	$I_{T(AV)}$	max.	16	A
at T_{mb} = 85 °C	$I_{T(AV)}$	max.	14	A
R.M.S. on-state current	$I_{T(RMS)}$	max.	25	A
Repetitive peak on-state current	I_{TRM}	max.	200	A
Non-repetitive peak on-state current; t = 10 ms; half sine-wave; T_j = 125 °C prior to surge; with reapplied V_{RWMmax}	I_{TSM}	max.	200	A
I^2t for fusing (t = 10 ms)	I^2t	max.	200	A^2s
Rate of rise of on-state current after triggering with I_G = 200 mA to I_T = 50 A	dI_T/dt	max.	20	A/μs

Gate to cathode

Reverse peak voltage	V_{RGM}	max.	5	V
Average power dissipation (averaged over any 20 ms period)	$P_{G(AV)}$	max.	0,5	W
Peak power dissipation	P_{GM}	max.	5	W

Temperatures

Storage temperature	T_{stg}		−55 to + 125	°C
Junction temperature	T_j	max.	125	°C

THERMAL RESISTANCE

From junction to mounting base	$R_{th\ j\text{-}mb}$	=	1,6	°C/W
From mounting base to heatsink with heatsink compound	$R_{th\ mb\text{-}h}$	=	0,2	°C/W
Transient thermal impedance (t = 1 ms)	$Z_{th\ j\text{-}mb}$	=	0,09	°C/W

OPERATING NOTE

The terminals should neither be bent nor twisted; they should be soldered into the circuit so that there is no strain on them.
During soldering the heat conduction to the junction should be kept to a minimum.

* To ensure thermal stability: $R_{th\ j\text{-}a} < 4{,}5$ °C/W (d.c. blocking) or < 9 °C/W (a.c.). For smaller heat-sinks $T_{j\ max}$ should be derated. For a.c. see Fig. 3.

CHARACTERISTICS

Anode to cathode

On-state voltage I_T = 50 A; T_j = 25 °C	V_T	<	2 V *
Rate of rise of off-state voltage that will not trigger any device; exponential method; V_D = 2/3 V_{DRMmax}; T_j = 125 °C	dV_D/dt	<	200 V/μs
Reverse current V_R = V_{RWMmax}; T_j = 125 °C	I_R	<	3 mA
Off-state current V_D = V_{DWMmax}; T_j = 125 °C	I_D	<	3 mA
Latching current; T_j = 25 °C	I_L	typ.	50 mA
Holding current; T_j = 25 °C	I_H	typ.	25 mA

Gate to cathode

Voltage that will trigger all devices V_D = 6 V; T_j = 25 °C	V_{GT}	>	3 V
Voltage that will not trigger any device V_D = V_{DRMmax}; T_j = 125 °C	V_{GD}	<	200 mV
Current that will trigger all devices V_D = 6 V; T_j = 25 °C	I_{GT}	>	40 mA

Switching characteristics

Gate-controlled turn-on time (t_{gt} = t_d + t_r) when switched from V_D = 400 V to I_T = 10 A; I_{GT} = 200 mA; T_j = 25 °C	t_{gt}	typ.	2 μs

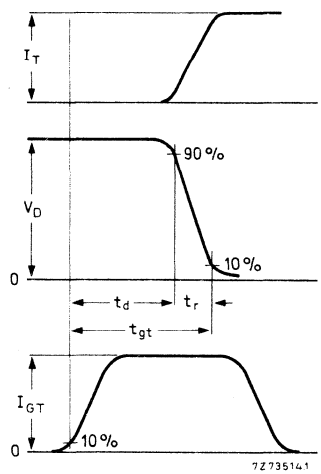

Fig. 2 Gate-controlled turn-on time definitions.

* Measured under pulse conditions to avoid excessive dissipation.

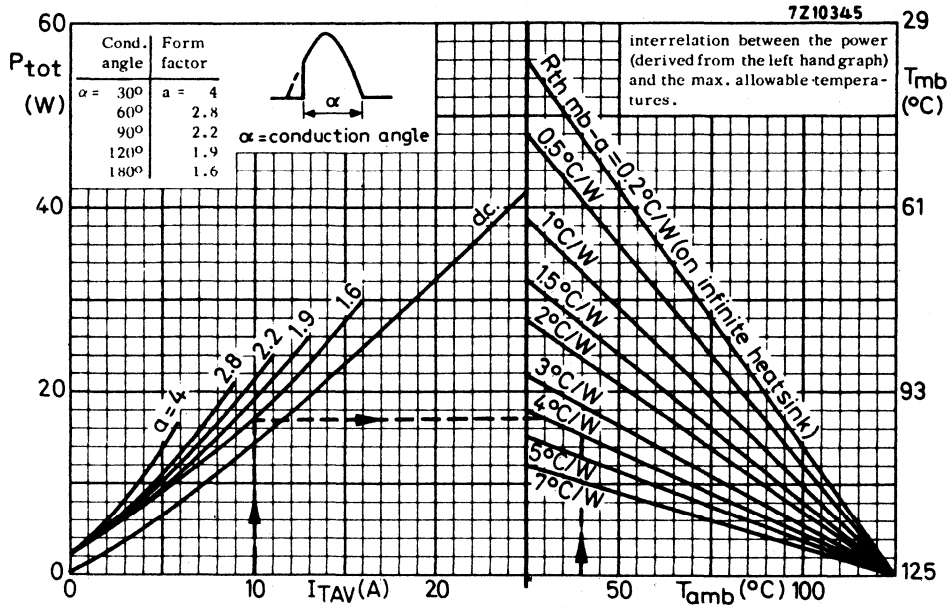
7Z10345
Ptot (W)
Tmb (°C)
Cond. angle
Form factor
α = 30° a = 4
60° 2.8
90° 2.2
120° 1.9
180° 1.6
α = conduction angle
interrelation between the power (derived from the left hand graph) and the max. allowable temperatures.
Rth mb-a = 0.2°C/W (on infinite heatsink)
0.5°C/W
1°C/W
1.5°C/W
2°C/W
3°C/W
4°C/W
5°C/W
7°C/W
d.c.
a = 4
2.8
2.2
1.9
1.6
ITAV (A)
Tamb (°C)

Fig. 3.

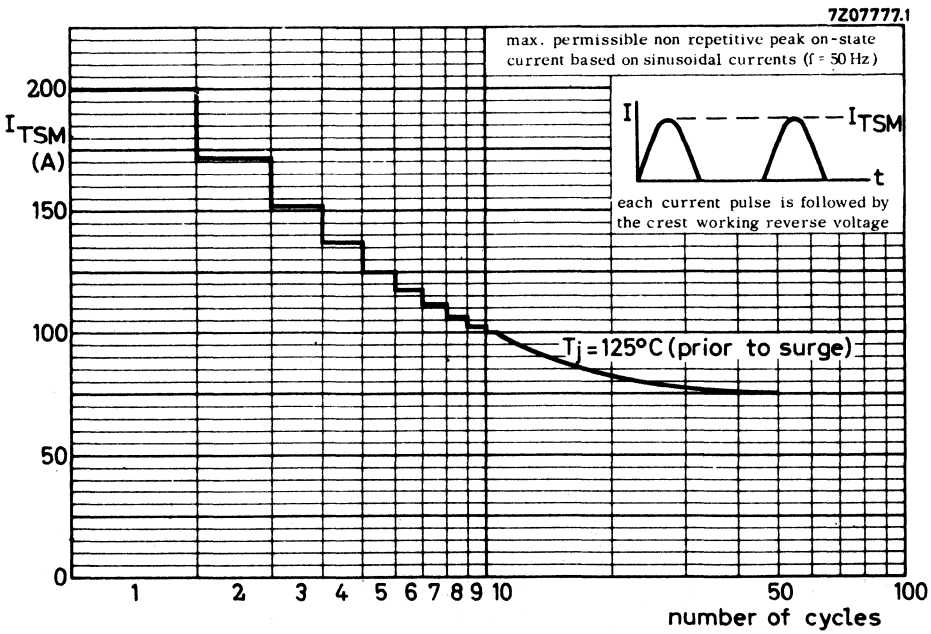
7Z07777.1
max. permissible non repetitive peak on-state current based on sinusoidal currents (f = 50 Hz)
ITSM (A)
I
ITSM
t
each current pulse is followed by the crest working reverse voltage
Tj = 125°C (prior to surge)
number of cycles

Fig. 4.

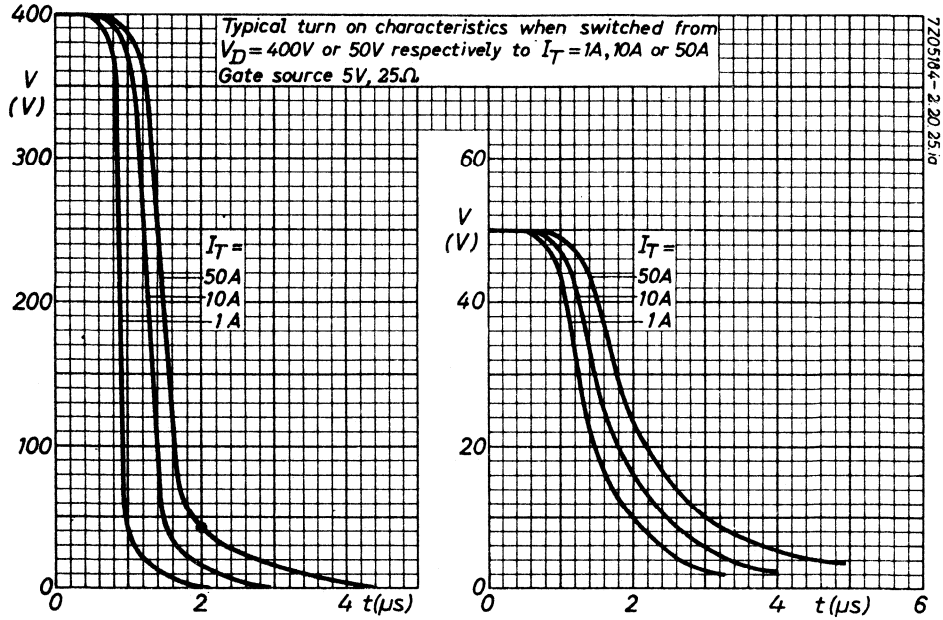
Typical turn on characteristics when switched from
V_D = 400V or 50V respectively to I_T = 1A, 10A or 50A
Gate source 5V, 25Ω
7Z05104-2.20.25.10
400
V
(V)
300
200
100
0
0
2
4 t(μs)
I_T =
50A
10A
1A
60
V
(V)
40
20
0
0
2
4
t(μs)
6
I_T =
50A
10A
1A

Fig. 5.

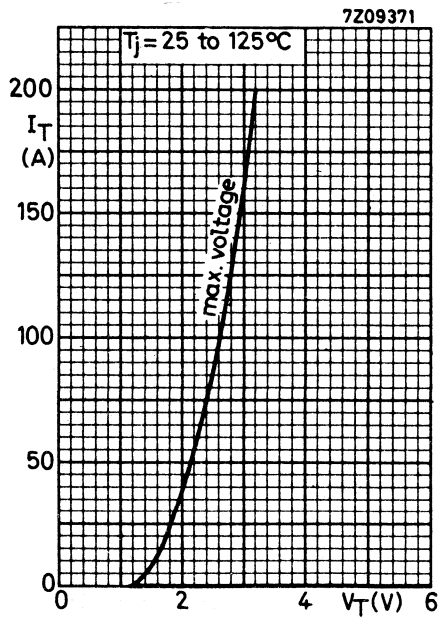
7Z09371
Tj = 25 to 125°C
200
I_T
(A)
150
100
50
0
max. voltage
0
2
4
V_T(V)
6

Fig. 6.

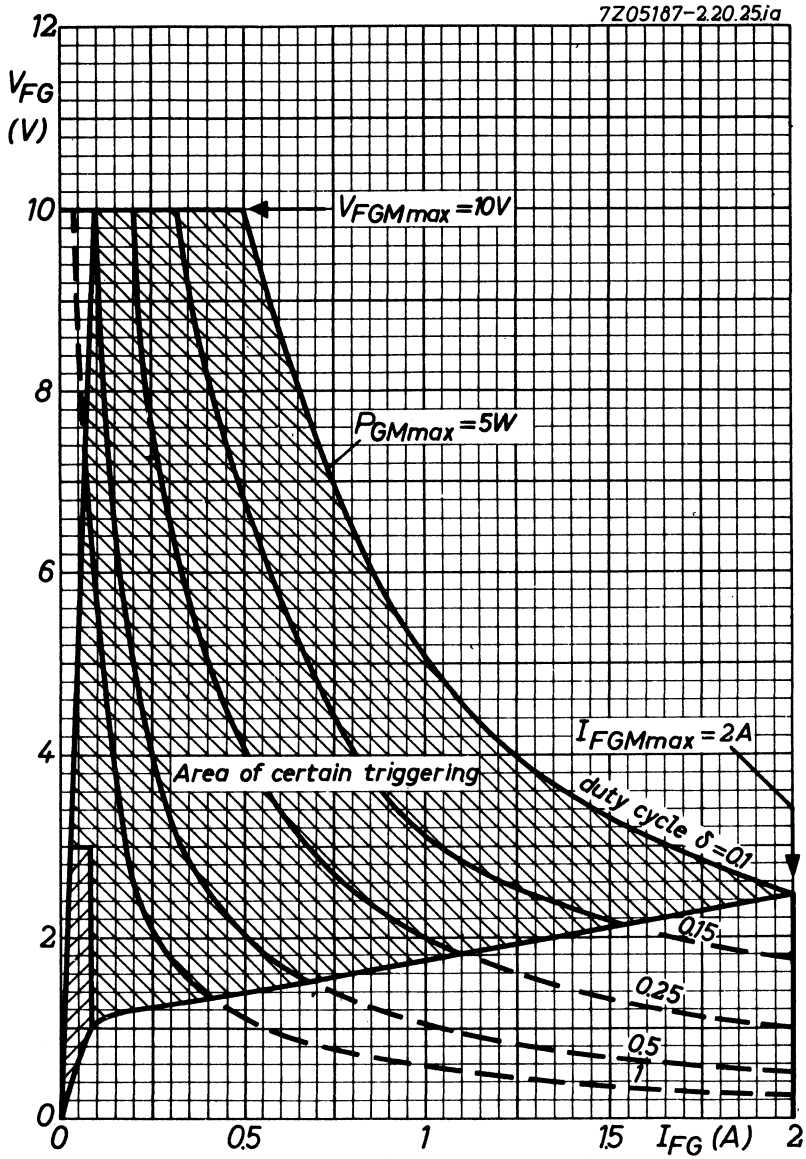

Gate characteristics with curves P_{GAV} = 0.5W

Fig. 7.

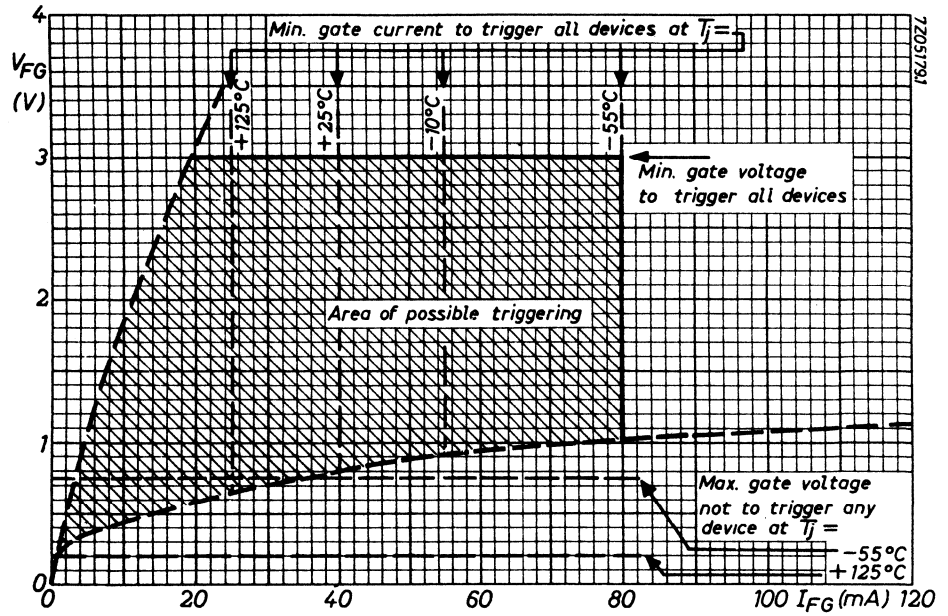
7Z05179.1
Min. gate current to trigger all devices at T_j =
V_{FG} (V)
+125°C
+25°C
−10°C
−55°C
Min. gate voltage to trigger all devices
Area of possible triggering
Max. gate voltage not to trigger any device at T_j =
−55°C
+125°C
I_{FG} (mA)
0
1
2
3
4
20
40
60
80
100
120

Fig. 8.

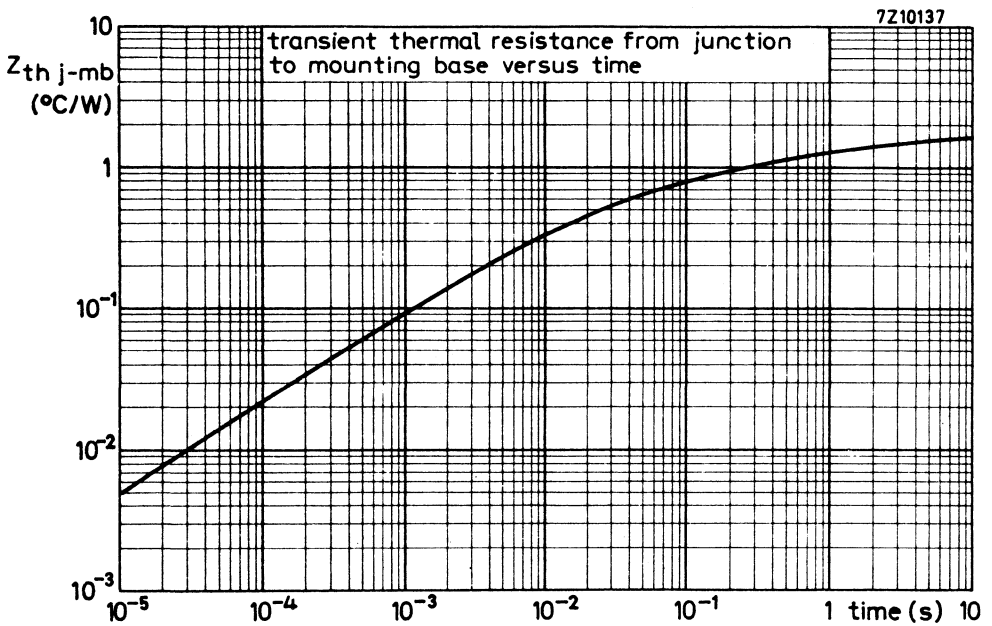
7Z10137
transient thermal resistance from junction to mounting base versus time
$Z_{th\ j\text{-}mb}$ (°C/W)
10
1
10^{-1}
10^{-2}
10^{-3}
10^{-5}
10^{-4}
10^{-3}
10^{-2}
10^{-1}
1
time (s)
10

Fig. 9.

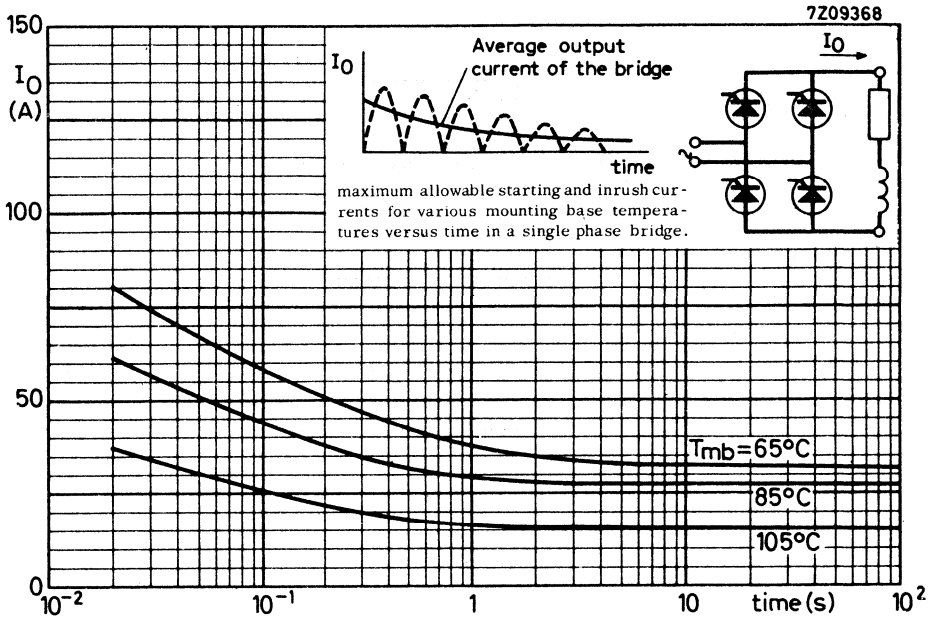
7Z09368
150
I_O
(A)
100
50
0
10^{-2}
10^{-1}
1
10
time (s)
10^2
T_{mb}=65°C
85°C
105°C
I_O
Average output
current of the bridge
time
maximum allowable starting and inrush currents for various mounting base temperatures versus time in a single phase bridge.

Fig. 10.

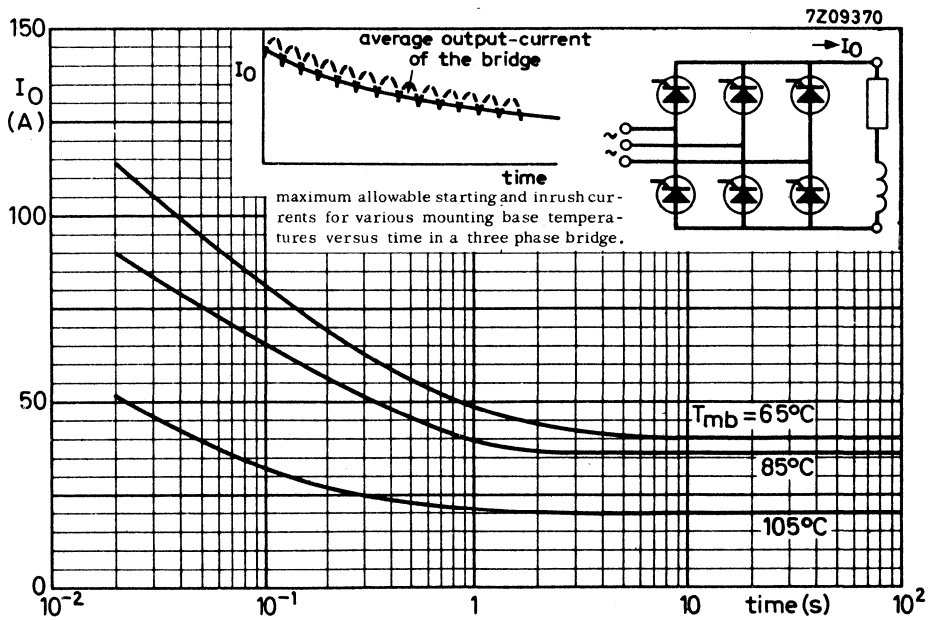
7Z09370
150
I_O
(A)
100
50
0
10^{-2}
10^{-1}
1
10
time (s)
10^2
T_{mb}=65°C
85°C
105°C
I_O
average output-current
of the bridge
time
maximum allowable starting and inrush currents for various mounting base temperatures versus time in a three phase bridge.

Fig. 11.

THYRISTOR

Fully-diffused thyristor in TO–92 package, with low gate current requirement suitable for driving from IC outputs. Applications include relay and coil pulsing, control of small DC motors, small lamps, etc.

QUICK REFERENCE DATA

Repetitive peak voltages	V_{DRM}/V_{RRM}	max.	200	V
Average on-state current	$I_{T(AV)}$	max.	0.5	A
RMS on-state current	$I_{T(RMS)}$	max.	0.8	A
Non-repetitive peak on-state current	I_{TSM}	max.	10	A

MECHANICAL DATA

Dimensions in mm

Fig.1 TO–92

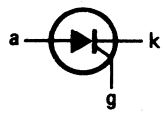

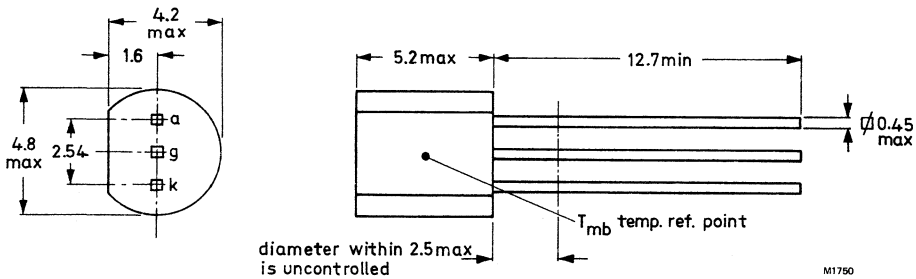

RATINGS

Limiting values in accordance with the Absolute Maximum System (IEC 134).

Anode to cathode

Non-repetitive peak voltages ($t \leqslant 10$ ms)	V_{DSM}/V_{RSM}	max.	200	V
Repetitive peak voltages ($\delta \leqslant 0.01$); $R_{GK} = 1\ k\Omega$	V_{DRM}/V_{RRM}	max.	200	V
Crest-working off-state voltage	V_{DWM}/V_{RWM}	max.	200	V
Average on-state current (averaged over any 20 ms period up to T_c = 67 °C	$I_{T(AV)}$	max.	0.51	A
T_c = 102 °C	$I_{T(AV)}$	max.	0.255	A
RMS on-state current	$I_{T(RMS)}$	max.	0.8	A
Repetitive peak on-state current	I_{TRM}	max.	8	A
Non-repetitive peak on-state current; t = 8.3 ms; half sinewave; T = 25 °C	I_{TSM}	max.	10	A
I^2t for fusing (t = 8.3 ms)	I^2t	max.	0.4	A^2s

Gate to cathode

Peak reverse voltage	V_{RGM}	max.	5	V
Average power dissipation T_{amb} = 25 °C	$P_{G(AV)}$	max.	0.01	W
Peak power dissipation T_{amb} = 25 °C	P_{GM}	max.	0.1	W

Temperatures

Storage temperature	T_{stg}		−65 to +150	°C
Operating junction temperature	T_j	max.	−65 to +125	°C

THERMAL RESISTANCE

From junction to ambient in free air	$R_{th\ j\text{-}a}$	=	150	K/W*
From junction to case	$R_{th\ j\text{-}c}$	=	75	K/W**

*Device mounted on printed circuit board, max. lead length 4 mm.

**This measurement is made with the case mounted "flat side down" on a heatsink and held in position by means of a metal clamp over the curved surface.

CHARACTERISTICS

Anode to cathode

Rate of rise of off-state voltage that will not trigger any device; exponential method; $V_D = 2/3\ V_{DRM\ max}$; $R_{GK} = 1\ k\Omega$; $T_j = 125\ ^oC$	dV_D/dt	typ.	25	V/μs
Peak off-state/reverse current				
$V_D = 200\ V$; $R_{GK} = 1\ k\Omega$; $T_j = 25\ ^oC$	I_{DRM}/I_{RRM}	<	10	μA
$T_j = 125\ ^oC$	I_{DRM}/I_{RRM}	<	50	μA
On-state voltage $I_{TM} = 1.2\ A$ peak; $T_j = 25\ ^oC$; $t_p = 300\ \mu s$; $\delta \leqslant 0.01$	V_{TM}	<	1.7	V
Latching current $V_D = 12\ V$; $R_{GK} = 1\ k\Omega$; $T_j = 25\ ^oC$	I_L	<	6	mA
Holding current $V_D = 12\ V$; $R_{GK} = 1\ k\Omega$; $T_j = 25\ ^oC$	I_H	<	5	mA

Gate to cathode

Voltage that will trigger all devices (continuous DC)				
$V_D = 12\ V$; $R_L = 100\ \Omega$; $T_j = 25\ ^oC$	V_{GT}	>	0.8	V
$T_j = -65\ ^oC$	V_{GT}	>	1.2	V
Voltage that will not trigger any devices $V_D = 200\ V$; $T_j = 125\ ^oC$	V_{GD}	<	0.1	V
Current that will trigger all devices				
$V_D = 200\ V$; $R_L = 100\ \Omega$; $T_j = 25\ ^oC$	I_{GT}	>	200	μA
$T_j = -65\ ^oC$	I_{GT}	>	350	μA

ACCESSORIES

TYPE NUMBER SUMMARY

type number	description	envelope
56264a	mica washer (up to 200 V)	TO-48
56264b	insulating bush	TO-48
56295a	mica washer (up to 2000 V)	TO-64
56295b	PTFE ring	TO-64
56295c	insulating bush	TO-64
56353	spring clip	SOT-82 ←
56354	mica insulator	SOT-82 ←
56359b	mica washer (up to 1000 V)	TO-220
56359c	insulating bush (up to 800 V)	TO-220
56359d	rectangular insulating bush (up to 1000 V)	TO-220
56360a	rectangular washer	TO-220
56363	spring clip (direct mounting)	TO-220, SOT-186
56364	spring clip (insulated mounting)	TO-220
56367	alumina insulator (up to 2000 V)	TO-220
56368b	insulating bush (up to 800 V)	SOT-93
56368c	mica insulator (up to 800 V)	SOT-93
56369	mica insulator (up to 2000 V)	TO-220
56378	mica insulator (up to 1500 V)	SOT-93
56379	spring clip	SOT-93

56264a MICA WASHER

Insulator up to 2000 V

MECHANICAL DATA Dimensions in mm

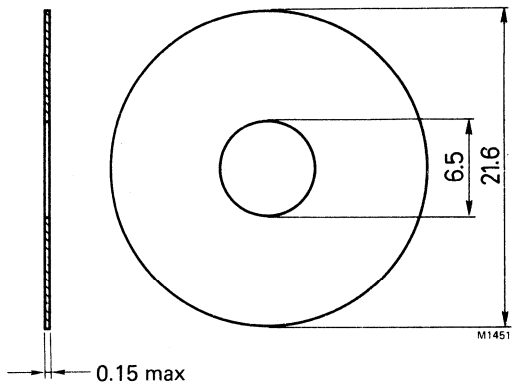

56264b INSULATING BUSH

MECHANICAL DATA Dimensions in mm

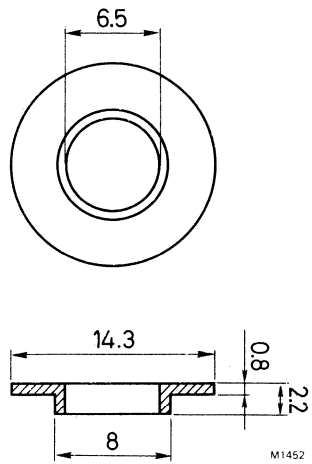

THERMAL RESISTANCE

From mounting base to heatsink

with mica washer, without heatsink compound	$R_{th\ mb\text{-}h}$	=	5	K/W
with mica washer, with heatsink compound	$R_{th\ mb\text{-}h}$	=	2.5	K/W

TEMPERATURE

Maximum allowable temperature	T_{max}	=	175	°C

56295a MICA WASHER

Insulator up to 2 kV.

MECHANICAL DATA

Dimensions in mm

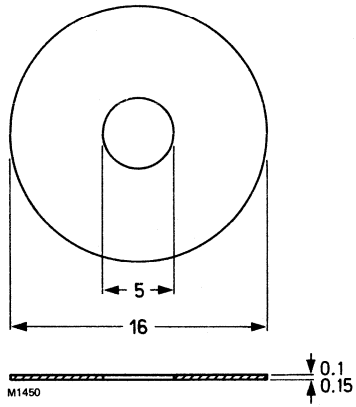

56295b PTFE RING

MECHANICAL DATA

Dimensions in mm

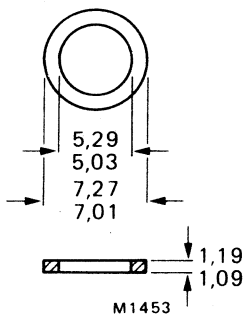

56295c INSULATING BUSH

MECHANICAL DATA

Dimensions in mm

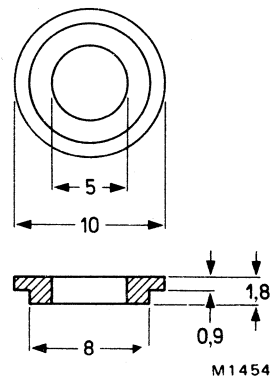

THERMAL RESISTANCE

From mounting base to heatsink			
without heatsink compound	$R_{th\ mb\text{-}h}$	= 5	K/W
with heatsink compound	$R_{th\ mb\text{-}h}$	= 2.5	K/W

TEMPERATURE

Maximum allowable temperature	T_{max}	= 175	°C

Mounting SOT82 envelopes.

→ 56353 CLIP

MECHANICAL DATA

Material: high carbon spring steel

Dimensions in mm

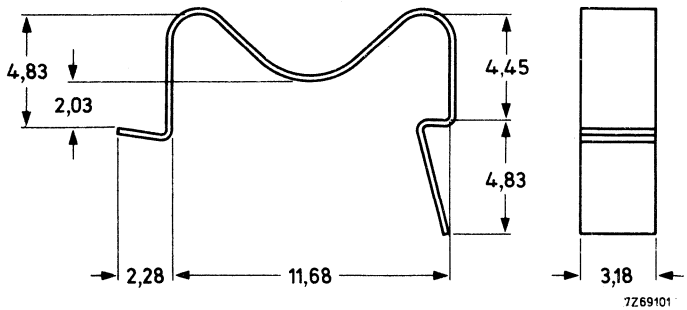

Spring clip suitable for heatsink of 1,5 to 2 mm.

→ 56354 MICA INSULATOR

MECHANICAL DATA

Dimensions in mm

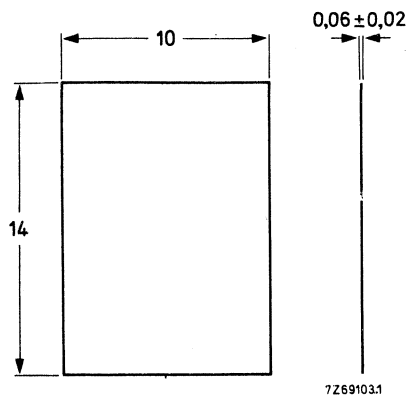

56359b MICA WASHER

Insulator up to 1000 V.

MECHANICAL DATA

Dimensions in mm

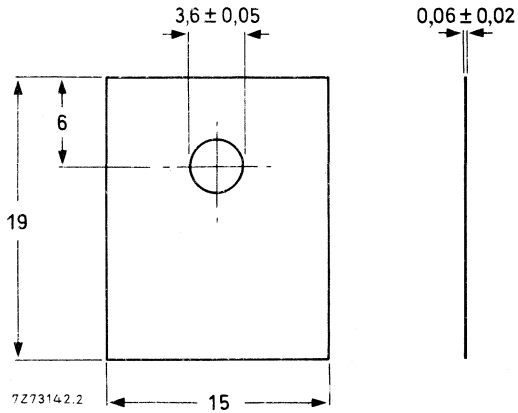

56359c INSULATING BUSH

Insulator up to 800 V.

MECHANICAL DATA

Material: polyester

Dimensions in mm

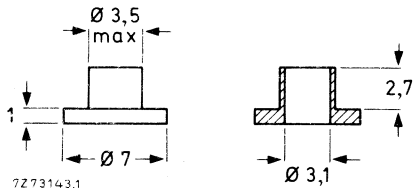

TEMPERATURE

Maximum pemissible temperature

T_{max} = 150 °C

56359d RECTANGULAR INSULATING BUSH

Insulator up to 1000 V.

MECHANICAL DATA

Dimensions in mm

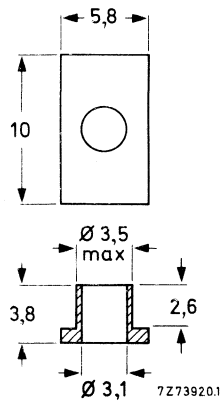

TEMPERATURE

Maximum permissible temperature

T_{max} = 150 °C

56360a RECTANGULAR WASHER (For TO-220)

For direct and insulated mounting.

MECHANICAL DATA

Material: brass; nickel plated.

Dimensions in mm

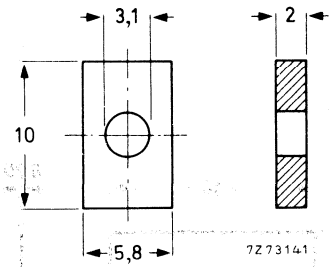

56363 SPRING CLIP (For TO-220 and SOT-186)

For direct mounting.

MECHANICAL DATA

Dimensions in mm

Material: stainless steel; for mounting on heatsink of 1.0 to 2.0 mm.

Recommended force of clip on device is 20 N (2 kgf).

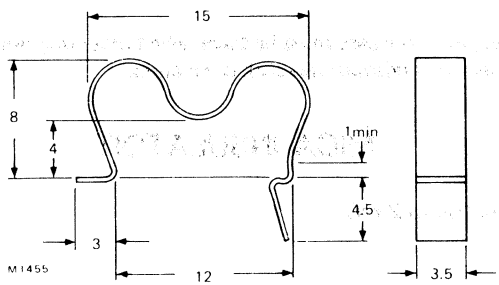

56364 SPRING CLIP (For TO-220)

For insulated mounting.

MECHANICAL DATA

Dimensions in mm

Material: stainless steel; for mounting on heatsink of 1.0 to 1.5 mm.

Recommended force of clip on device is 20 N (2 kgf).

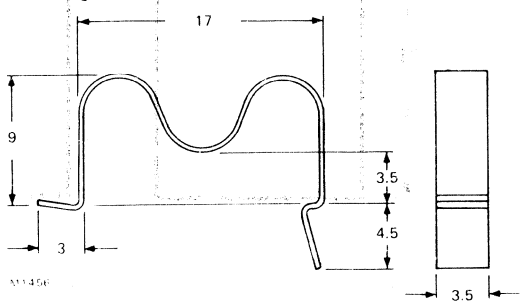

To be used in conjunction with insulators **56367** or **56369**

56367 ALUMINA INSULATOR

For insulated clip mounting up to 2 kV.

MECHANICAL DATA Dimensions in mm

Material: 96-alumina.

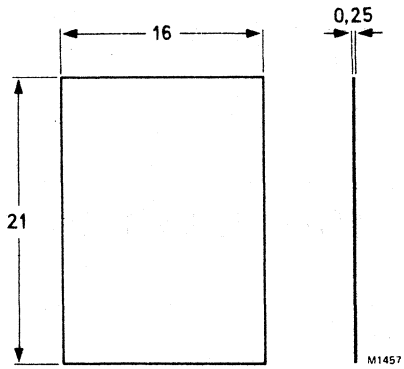

*Because alumina is brittle, extreme care must be taken when mounting devices not to crack the alumina, particularly when used without heatsink compound.

56369 MICA INSULATOR

For insulated clip mounting up to 2 kV.

MECHANICAL DATA Dimensions in mm

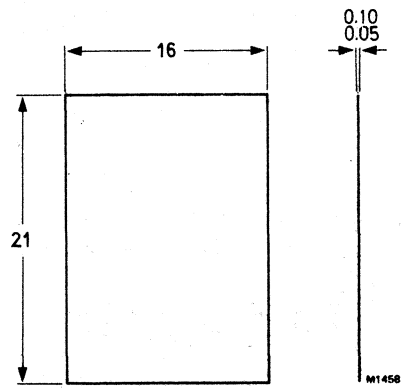

56368b INSULATING BUSH

For insulated screw mounting up to 800 V.

MECHANICAL DATA Dimensions in mm

Material: polyester

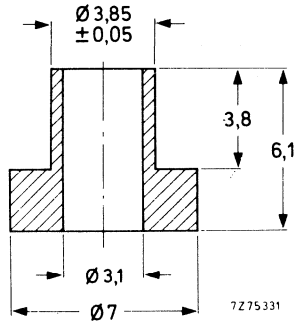

TEMPERATURE

Maximum permissible temperature T_{max} = 150 °C

56368c MICA INSULATOR

For insulated screw mounting up to 800 V.

MECHANICAL DATA Dimensions in mm

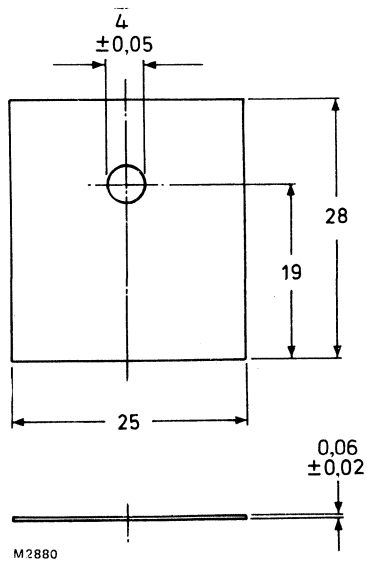

56369: see preceding page.

56378 MICA INSULATOR

For clip mounting up to 1500 V.

MECHANICAL DATA Dimensions in mm

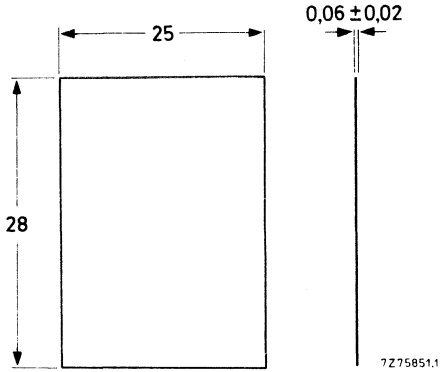

56379 SPRING CLIP

For direct and insulated mounting of SOT-93 envelopes.

MECHANICAL DATA Dimensions in mm

Material:
CrNi steel NLN-939;
thickness 0.4 ± 0.04.

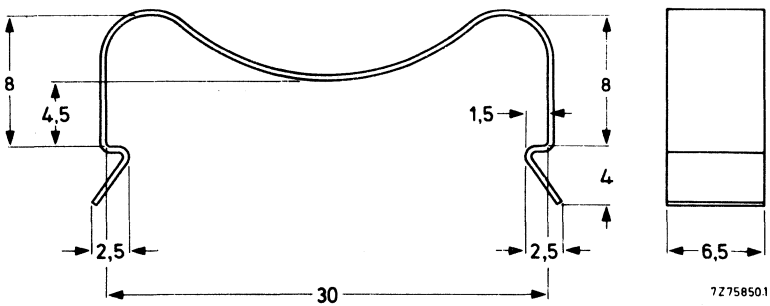

MOUNTING INSTRUCTIONS

MOUNTING INSTRUCTIONS FOR TO-220 ENVELOPES

GENERAL DATA AND INSTRUCTIONS

General rules

1. First fasten the device to the heatsink before soldering the leads.
2. Avoid axial stress to the leads.
3. Keep mounting tool (e.g. screwdriver) clear of the plastic body.
4. The rectangular washer may only touch the plastic part of the body; it should not exert any force on that part (screw mounting).

Heatsink requirements

Flatness in the mounting area: 0,02 mm maximum per 10 mm.
Mounting holes must be deburred, see further mounting instructions.

Heatsink compound

Values of the thermal resistance from mounting base to heatsink ($R_{th\ mb\text{-}h}$) given for mounting with heatsink compound refer to the use of a metallic oxide-loaded compound. Ordinary silicone grease is not recommended.

For insulated mounting, the compound should be applied to the bottom of both device and insulator.

Mounting methods for power devices

1. Clip mounting

   Mounting with a spring clip gives:

   a. A good thermal contact under the crystal area, and slightly lower $R_{th\ mb\text{-}h}$ values than screw mounting.
   b. Safe insulation for mains operation.

2. M3 screw mounting

   It is recommended that the rectangular spacing washer is inserted between screw head and mounting tab.

   Mounting torque for screw mounting:

   (For thread-forming screws these are final values. Do not use self-tapping screws.)

Minimum torque (for good heat transfer)	0,55 Nm (5,5 kgcm)
Maximum torque (to avoid damaging the device)	0,80 Nm (8,0 kgcm)

N.B.: When a nut or screw is not driven direct against a curved spring washer or lock washer (not for thread-forming screw), the torques are as follows:

Minimum torque (for good heat transfer)	0,4 Nm (4 kgcm)
Maximum torque (to avoid damaging the device)	0,6 Nm (6 kgcm)

3. Rivet mounting non-insulated

The device should not be pop-rivetted to the heatsink. However, it is permissible to press-rivet providing that eyelet rivets of soft material are used, and the press forces are slowly and carefully controlled so as to avoid shock and deformation of either heatsink or mounting tab.

→ Devices may be rivetted to flat heatsinks; such a process must neither deform the mounting tab, nor enlarge the mounting hole. The maximum recommended hole size for rivet mounting is 3.5 mm. The pre-formed head of the rivet should be on the device side and any rivet tool used should not damage the plastic body of the device.

Thermal data

(Typical figures, for exact figures see data for each device type).

			clip mounting	screw mounting	
From mounting base to heatsink					
with heatsink compound, direct mounting	$R_{th\ mb\text{-}h}$	=	0,3	0,5	K/W
without heatsink compound, direct mounting	$R_{th\ mb\text{-}h}$	=	1,4	1,4	K/W
with heatsink compound and 0,1 mm maximum mica washer	$R_{th\ mb\text{-}h}$	=	2,2	–	K/W
with heatsink compound and 0,25 mm maximum alumina insulator	$R_{th\ mb\text{-}h}$	=	0,8	–	K/W
with heatsink compound and 0,05 mm mica washer					
insulated up to 500 V	$R_{th\ mb\text{-}h}$	=	–	1,4	K/W
insulated up to 800 V/1000 V	$R_{th\ mb\text{-}h}$	=	–	1,6	K/W
without heatsink compound and 0,05 mm mica washer					
insulated up to 500 V	$R_{th\ mb\text{-}h}$	=	–	3,0	K/W
insulated up to 800 V/1000 V	$R_{th\ mb\text{-}h}$	=	–	4,5	K/W

Lead bending

Maximum permissible tensile force on the body, for 5 seconds is 20 N (2 kgf).

The leads can be bent through 90° maximum, twisted or straightened. To keep forces within the above-mentioned limits, the leads are generally clamped near the body, using pliers. The leads should neither be bent nor twisted less than 2,4 mm from the body.

Soldering

Lead soldering temperature at > 3 mm from the body; $t_{sld} < 5$ s:

Devices with $T_{j\ max} \leqslant 175$ °C, soldering temperature $T_{sld\ max} = 275$ °C.
Devices with $T_{j\ max} \leqslant 110$ °C, soldering temperature $T_{sld\ max} = 240$ °C.

Avoid any force on body and leads during or after soldering: do not correct the position of the device or of its leads after soldering.

It is not permitted to solder the metal tab of the device to a heatsink, otherwise its junction temperature rating will be exceeded.

Mounting base soldering

Recommended metal-alloy of solder paste (85% metal weight)
62 Sm/36 Pb/2 Ag or 60 Sn/40 Pb.
Maximum soldering temperature ⩽ 200 °C (tab-temperature).
Soldering cycle duration including pre-heating ⩽ 30 sec.

For good soldering and avoiding damage to the encapsulation pre-heating is recommended to a temperature ⩽ 165 °C at a duration ⩽ 10 s.

INSTRUCTIONS FOR CLIP MOUNTING

Direct mounting with clip 56363

1. Apply heatsink compound to the mounting base, then place the device on the heatsink.
2. Push the short end of the clip into the narrow slot in the heatsink with clip at an angle of 10° to 30° to the vertical (see Figs 1 and 2).
3. Push down the clip over the device until the long end of the clip snaps into the wide slot in the heatsink. The clip should bear on the plastic body, not on the tab (see Fig.2a).
   Do not insert more than 1 mm beyond final position.

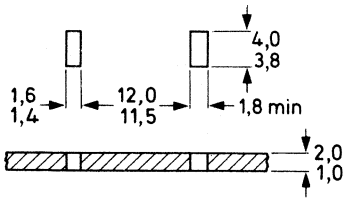

Fig. 1 Heatsink requirements.

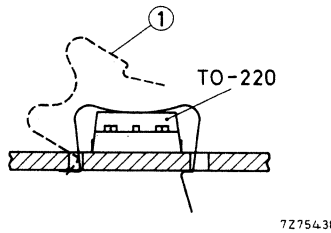

Fig. 2 Mounting.
(1) spring clip 56363.

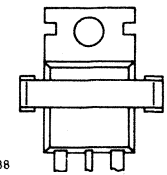

Fig. 2a Position of device (top view).

Insulated mounting with clip 56364

With the insulators 56367 or 56369 insulation up to 2 kV is obtained.

1. Apply heatsink compound to the bottom of both device and insulator, then place the device with the insulator on the heatsink.
2. Push the short end of the clip into the narrow slot in the heatsink with the clip at an angle of 10° to 30° to the vertical (see Figs 3 and 4).
3. Push down the clip over the device until the long end of the clip snaps into the wide slot in the heatsink. The clip should bear on the plastic body, not on the tab. Ensure that the device is centred on the mica insulator to prevent creepage.
   Do not insert more than 1 mm beyond final position.

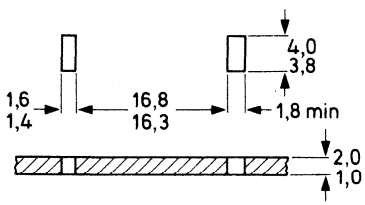

Fig. 3 Heatsink requirements.

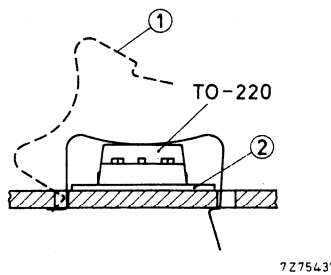

Fig. 4 Mounting.
(1) spring clip 56364.
(2) insulator 56369 or 56367.

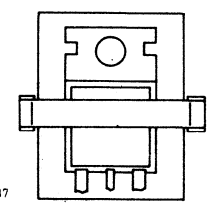

Fig.4a Position of device (top view).

INSTRUCTIONS FOR SCREW MOUNTING

Dimensions in mm

Direct mounting with screw and spacing washer

- *through heatsink with nut*

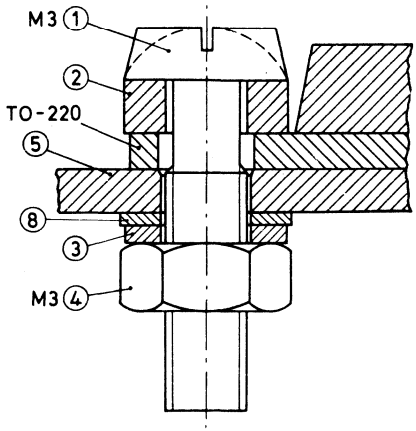

Fig. 5 Assembly.

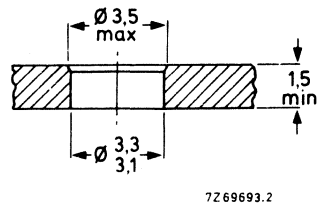

Fig. 6 Heatsink requirements.

(1) M3 screw.
(2) rectangular washer (56360a).
(3) lock washer.
(4) M3 nut.
(5) heatsink.
(8) plain washer.

- *into tapped heatsink*

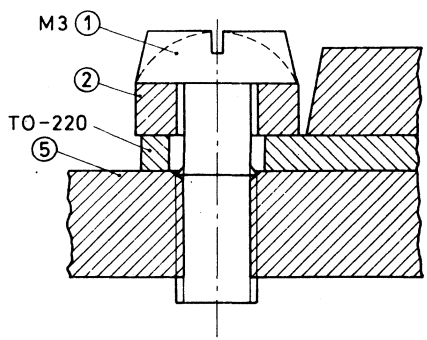

Fig. 7 Assembly.

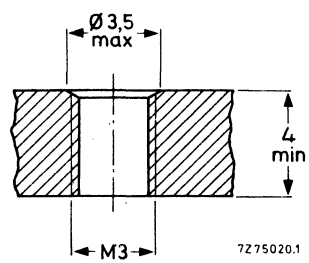

Fig. 8 Heatsink requirements.

(1) M3 screw.
(2) rectangular washer 56360a.
(5) heatsink.

Insulated mounting with screw and spacing washer
(not recommended where mounting tab is on mains voltage)

Dimensions in mm

- *through heatsink with nut*

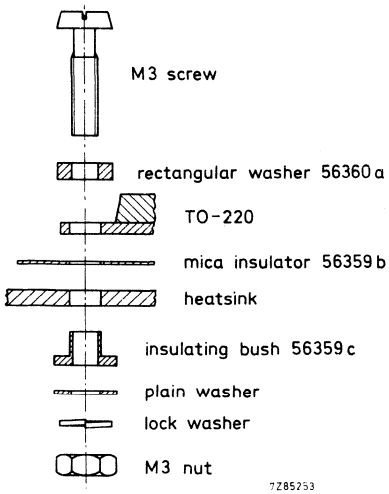

Fig. 9 Insulated screw mounting with rectangular washer. Known as a "bottom mounting".

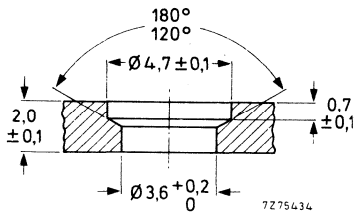

Fig. 10 Heatsink requirements for 500 V insulation.

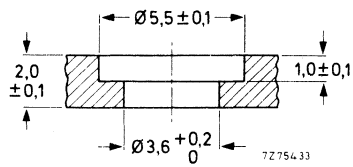

Fig. 11 Heatsink requirements for 800 V insulation.

- *into tapped heatsink*

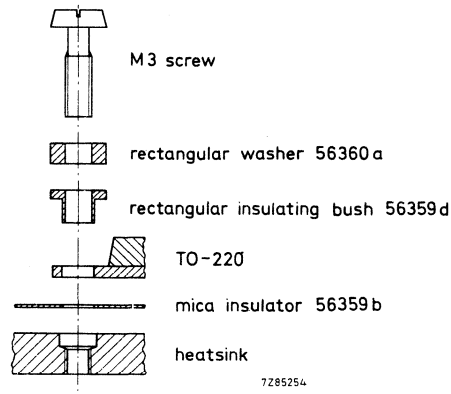

Fig. 12 Insulated screw mounting with rectangular washer into tapped heatsink. Known as a "top mounting".

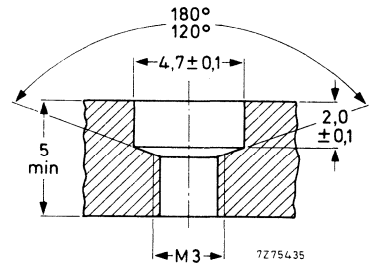

Fig. 13 Heatsink requirements for 500 V insulation.

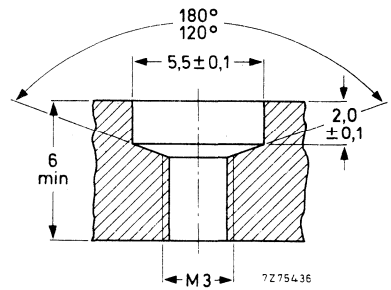

Fig. 14 Heatsink requirements for 1000 V insulation.

MOUNTING INSTRUCTIONS FOR TO-220 FULL-PACK (SOT-186) DEVICES

Use of full-pack (SOT-186 envelope) devices allows an insulated mounting with up to 1kV isolation. These devices require the assembly of less components than TO-220 devices with insulating washers.

GENERAL DATA AND INSTRUCTIONS

General rules

1. Mounting instructions for voltage isolation are given for guidance. Users should aquaint themselves with the relevant statutory and mandatory regulations if the heatsink is earthed or may be touched.
2. Fasten device to heatsink before soldering the leads.
3. Avoid axial stress to the leads.
4. Be careful to avoid damaging plastic with mounting tool (e.g. screwdriver).

Heatsink requirements

Flatness in the mounting area: 0.02mm maximum per 10mm.

Mounting holes must be deburred.

Heatsink compound

Values of thermal resistance given using heatsink compound refer to the use of a metallic oxide-loaded compound. Ordinary silicone grease is not recommended.

Mounting methods for power devices

1. Clip mounting:
   This gives better thermal contact under the crystal area than screw mounting.

   For details of mounting force for spring clip mounting see data sheet "Accesories for TO-220".
2. M3 screw mounting:
   It is recommended that a rectangular spacing washer (part no. 56360a) is inserted between the screw head and plastic mounting tab.

N.B. Data on accessories are given in separate data sheet "Accesories for TO-220".

Mounting torque for screw mounting:

(For thread-forming screws these are final values. Do not use self-tapping screws.)

Minimum torque (for good heat transfer)	0.55 Nm (5.5 kgcm)
Maximum torque (to avoid damaging the device)	0.80 Nm (8.0 kgcm)

N.B. When a nut or screw is not driven against a curved spring washer or lock washer (not for thread-forming screws) the torques are as follows:

Minimum torque (for good heat transfer)	0.40 Nm (4.0 kgcm)
Maximum torque (to avoid damaging device)	0.60 Nm (6.0 kgcm)

3. Rivet mounting:
   This method is **NOT** recommended because it will damage the plastic encapsulation.

Lead bending

(Maximum permissible tensile force on the body, for 5 seconds is 20N (2kgf).

The leads should not be bent less than 2.4mm from the seal, and should be supported during bending.
The leads can be bent, twisted or straightened by 90 ^{o} maximum. The minimum bending radius is 1mm.

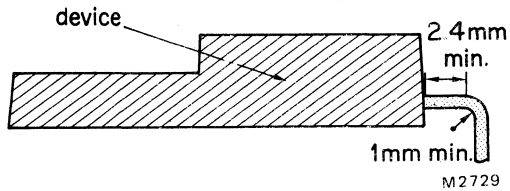

Fig.1 Lead bending of devices.

Soldering

Lead soldering temperature at >3mm from body for t_{sld} <5 seconds:

Devices with T_j max. ≤175 ^{o}C, T_{sld} max. = 275 ^{o}C.

Devices with T_j max. ≤110 ^{o}C, T_{sld} max. = 240 ^{o}C.

Avoid any force on body and leads during or after soldering. Do not correct the position of the devices or of its leads after soldering.

INSTRUCTIONS FOR CLIP MOUNTING

1. Apply heatsink compound to the mounting base, then place device on heatsink.
2. Push the short end of clip (part no. 56363) into the narrow slot in the heatsink with the clip at an angle of between 10° to 30° to the vertical (see Figs.2 & 3).
3. Push down the clip over the device until the long end of the clip snaps into the wide slot in the heatsink. The clip should bear down on the main part of the body, not on the tab (see Fig.3a).

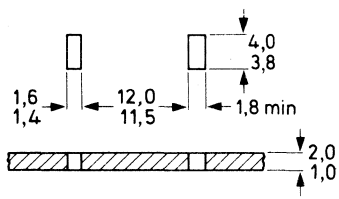

Fig.2 Heatsink requirements

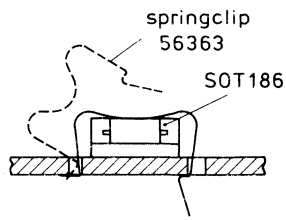

Fig.3 Mounting.

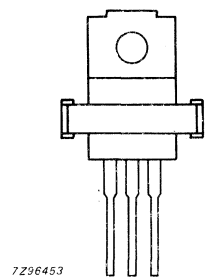

Fig.3a Position of device (top view).

INSTRUCTIONS FOR SCREW MOUNTING

Screw through heatsink with nut

Dimensions in mm

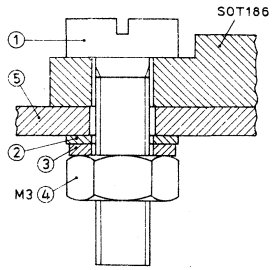

Fig.4 Assembly.

(1) M3 screw
(2) plain washer
(3) lock washer
(4) M3 nut
(5) heatsink

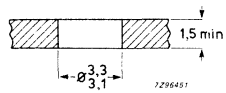

Fig.5 Heatsink requirements.

Into tapped heatsink

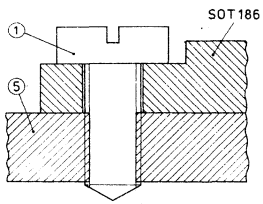

Fig.6 Assembly.

(1) M3 screw
(5) heatsink

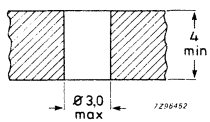

Fig.7 Heatsink requirements.

MOUNTING REQUIREMENTS FOR VOLTAGE ISOLATION

Full-pack devices may be used to maintain voltage isolation between the heatsink and the electrical circuit. However, users must ensure that there is a sufficient creepage distance between the exposed metal of the device (at both the lead and tab ends) and the heatsink. The distance required will vary according to the application and the regulations that may apply.

To increase the creepage distances the heatsink may be formed with slots or holes around the lead and tab ends of the device. The dimensions of the holes will vary according to the creepage distances required. For detail see Fig.8.

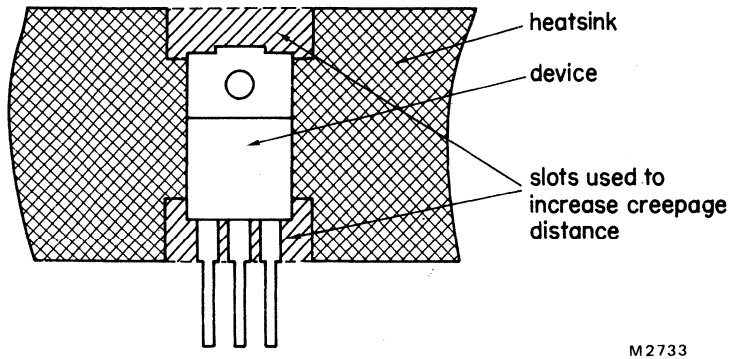

Fig.8 Slots formed in heatsink to increase creepage distance.

MOUNTING INSTRUCTIONS FOR SOT-82 ENVELOPES

GENERAL DATA AND INSTRUCTIONS

General rules

1. First fasten the devices to the heatsink before soldering the leads.
2. Avoid axial stress to the leads.
3. Keep mounting tool clear of the plastic body.

Heatsink requirements

Minimum thickness: 2 mm.
Flatness in the mounting area: 0,02 mm maximum per 10 mm.

Heatsink compound

Values of the thermal resistance from mounting base to heatsink ($R_{th\ mb\text{-}h}$) given for mounting with heatsink compound refer to the use of a metallic oxide-loaded compound. Ordinary silicone grease is not recommended.

For insulated mounting, the compound should be applied to the bottom of both device and insulator.

Mounting method for thyristors and triacs

1. Clip mounting

   Mounting by means of spring clip offers:

   a. A good thermal contact under the crystal area.
   b. Safe insulation for mains and high voltage operation

2. Body mounting

   A SOT-82 envelope can be adhesive mounted or soldered into a hybrid circuit.
   For soldering a copper plate or an anodized aluminium plate with copper layer is recommended.
   When adhesive mounting is applied also a ceramic substrate may be used.

Thermal data

From mounting base to heatsink

		clip mounting		
		direct	insulated	
with heatsink compound	$R_{th\ mb\text{-}h}$	0,4	2,0	K/W
without heatsink compound	$R_{th\ mb\text{-}h}$	2,0	5,0	K/W

Lead bending

Maximum permissible tensile force on the body, for 5 seconds is 20 N (2 kgf).

The leads can be bent through 90° maximum, twisted or straightened. To keep forces within the above-mentioned limits, the leads are generally clamped near the body, using pliers. The leads should neither be bent nor twisted less than 2,4 mm from the body.

Lead soldering

For devices with a maximum junction temperature ⩽ 150 °C.

a. Dip or wave soldering
   Temperature ⩽ 260 °C at a distance from the body > 5 mm and for a total contact time with soldering bath or waves < 7 s.
b. Hand soldering
   Temperature at a distance from the body > 3 mm for a total contact time < 5 s is < 275 °C or < 250 °C for a total contact time of < 10 s.

The body of the device must be kept clear of anything with a temperature > 200 °C.
Avoid any force on body and leads during or after soldering; do not correct the position of the device or of its leads after soldering.

Mounting base soldering

Recommended metal-alloy of solder paste (85% metal weight)
62 Sm/36 Pb/2 Ag or 60 Sn/40 Pb.
Maximum soldering temperature ⩽ 200 °C (tab-temperature).
Soldering cycle duration including pre-heating ⩽ 30 sec.

For good soldering and avoiding damage to the encapsulation pre-heating is recommended to a temperature ⩽ 165 °C at a duration ⩽ 10 s.

INSTRUCTIONS FOR CLIP MOUNTING

Direct mounting with clip 56353

1. Place the device on the heatsink, applying heatsink compound to the mounting base.
2. Push the short end of the clip into the narrow slot in the heatsink with the clip at an angle of 10° to 30° to the vertical (see Figs 1 and 2).
3. Push down the clip over the device until the long end of the clip snaps into the wide slot in the heatsink. The clip should bear on the plastic body (see Fig. 3).

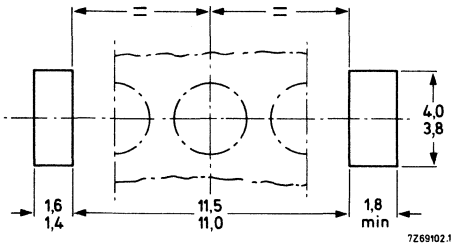

Fig. 1 Heatsink requirements.

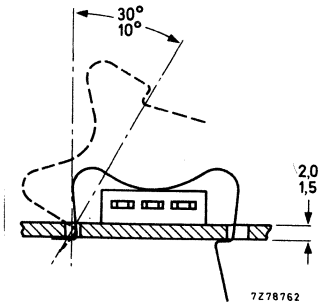

Fig. 2 Mounting spring clip.

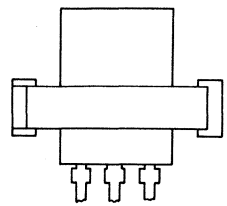

Fig. 3 Position of transistor (top view).

Insulated mounting with clip 56353 and mica 56354 (up to 1000 V insulation)

1. Place the device with the insulator on the heatsink, applying heatsink compound to the bottom of both device and insulator.
2. Push the short end of the clip into the narrow slot in the heatsink with the clip at an angle of 10° to 30° to the vertical (see Figs 4 and 5).
3. Push down the clip over the device until the long end of the clip snaps into the wide slot in the heatsink. The clip should bear on the plastic body (Fig. 6). Ensure that the device is centred on the mica insulator to prevent creepage.

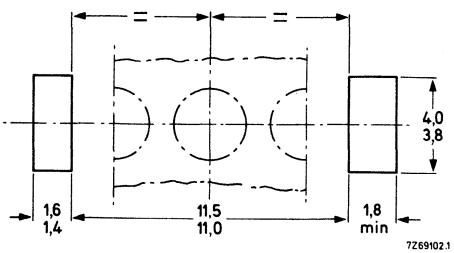

Fig. 4 Heatsink requirements.

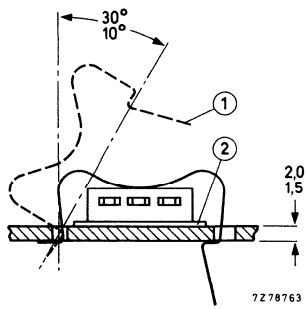

Fig. 5 Mounting.
(1) spring clip 56353.
(2) insulator 56354.

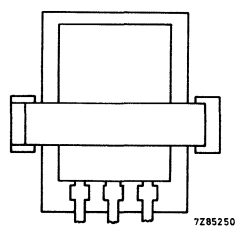

Fig. 6 Position of transistor (top view).

MOUNTING INSTRUCTIONS FOR SOT-93 ENVELOPES

GENERAL DATA AND INSTRUCTIONS

General rule

Avoid any sudden forces on leads and body; these forces, such as from falling on a hard surface, are easily underestimated. In the direct screw mounting an M4 screw must be used; an M3 screw in the insulating mounting.

Heatsink requirements

Flatness in the mounting area: 0,02 mm maximum per 10 mm.
The mounting hole must be deburred.

Heatsink compound

The thermal resistance from mounting base to heatsink ($R_{th\ mb\text{-}h}$) can be reduced by applying a metallic-oxide heatsink compound between the contact surfaces. For insulated mounting the compound should be applied to the bottom of both device and insulator.

Maximum play

The bush or the washer may only just touch the plastic part of the body, but should not exert any force on that part. Keep mounting tool (e.g. screwdriver) clear of the plastic body.

Mounting torques

For M3 screw (insulated mounting):	
Minimum torque (for good heat transfer)	0,4 Nm (4 kgcm)
Maximum torque (to avoid damaging the device)	0,6 Nm (6 kgcm)
For M4 screw (direct mounting only):	
Minimum torque (for good heat transfer)	0,4 Nm (4 kgcm)
Maximum torque (to avoid damaging the device)	1,0 Nm (10 kgcm)

Note: The M4 screw head should not touch the plastic part of the envelope.

Lead bending

Maximum permissible tensile force on the body for 5 s — 20 N (2 kgf)

No torsion is permitted at the emergence of the leads.

Bending or twisting is not permitted within a lead length of 0,3 mm from the body of the device.

The leads can be bent through 90° maximum, twisted or straightened; to keep forces within the above-mentioned limits, the leads should be clamped near the body.

Soldering

Recommendations for devices with a maximum junction temperature rating ≤ 175 °C:

a. Dip or wave soldering

Maximum permissible solder temperature is 260 °C at a distance from the body of > 5 mm and for a total contact time with soldering bath or waves of < 7 s.

b. Hand soldering

Maximum permissible temperature is 275 °C at a distance from the body of > 3 mm and for a total contact time with the soldering iron of < 5 s.

The body of the device must not touch anything with a temperature > 200 °C.

It is not permitted to solder the metal tab of the device to a heatsink, otherwise the junction temperature rating will be exceeded.

Avoid any force on body and leads during or after soldering; do not correct the position of the device or of its leads after soldering.

Thermal data

(Typical figures, for exact figures see data for each device type).

			clip mounting	screw mounting
Thermal resistance from mounting base to heatsink				
direct mounting				
with heatsink compound	$R_{th\ mb\text{-}h}$	=	0,3	0,3 K/W
without heatsink compound	$R_{th\ mb\text{-}h}$	=	1,5	0,8 K/W
with 0,05 mm mica washer				
with heatsink compound	$R_{th\ mb\text{-}h}$	=	0,8	0,8 K/W
without heatsink compound	$R_{th\ mb\text{-}h}$	=	3,0	2,2 K/W

INSTRUCTIONS FOR CLIP MOUNTING

Direct mounting with clip 56379

1. Place the device on the heatsink, applying heatsink compound to the mounting base.
2. Push the short end of the clip into the narrow slot in the heatsink with the clip at an angle of 10° to 20° to the vertical (see Fig. 1b).
3. Push down the clip over the device until the long end of the clip snaps into the wide slot in the heatsink. The clip should bear on the plastic body, not on the tab (see Fig. 1(c)).

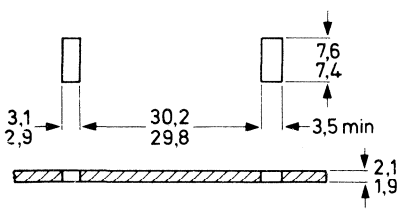

Fig. 1a Heatsink requirements.

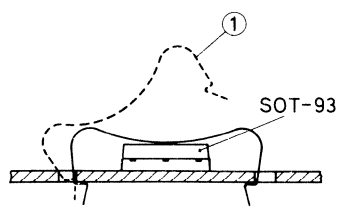

Fig. 1b Mounting.
(1) = spring clip 56379.

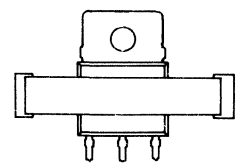

Fig. 1c Position of the device.

Insulated mounting with clip 56379

With the mica 56378 insulation up to 1500 V is obtained.

1. Place the device with the insulator on the heatsink, applying heatsink compound to the bottom of both device and insulator.
2. Push the short end of the clip into the narrow slot in the heatsink with the clip at an angle of 10° to 20° to the vertical (see Figs 2a and 2b).
3. Push down the clip over the device until the long end of the clip snaps into the wide slot in the heatsink. The clip should bear on the plastic body, not on the tab (see Fig. 2c). There should be minimum 3 mm distance between the device and the edge of the insulator for adequate creepage.

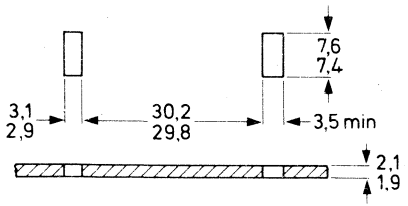

Fig. 2a Heatsink requirements.

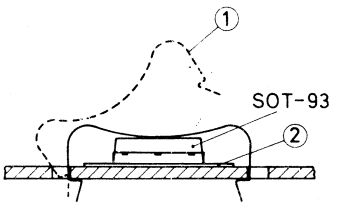

Fig. 2b Mounting.
(1) = spring clip 56379
(2) = insulator 56378

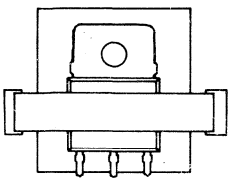

Fig. 2c Position of the device.

INSTRUCTIONS FOR SCREW MOUNTING

Direct mounting

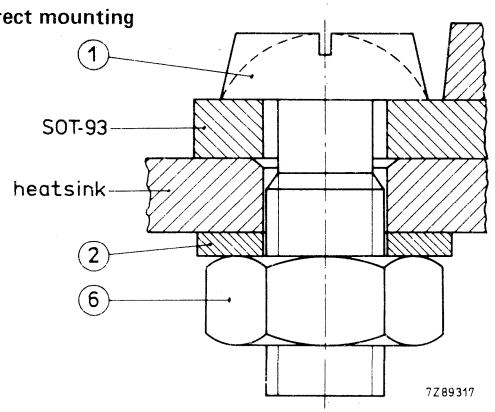

Fig. 3a Assembly through heatsink with nut.

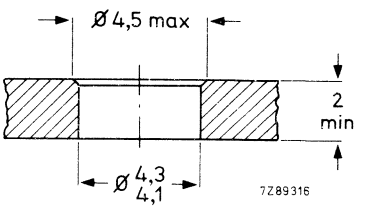

Fig. 3b Heatsink requirements.

When screw mounting the SOT-93 envelope, it is particularly important to apply a thin, even layer of heatsink compound to the mounting base, and to apply torque to the screw slowly so that the compound has time to flow and the mounting base is not deformed. Most SOT-93 envelopes contain a crystal larger than that in the other plastic envelopes, and it is more likely to crack if the mounting base is deformed.

Legend: (1) M4 screw; (2) plain washer; (6) M4 nut.
Where vibrations are to be expected the use of a lock washer or of a curved spring washer is recommended, with a plain washer between aluminium heatsink and spring washer.

Insulated screw mounting with nut; up to 800 V.

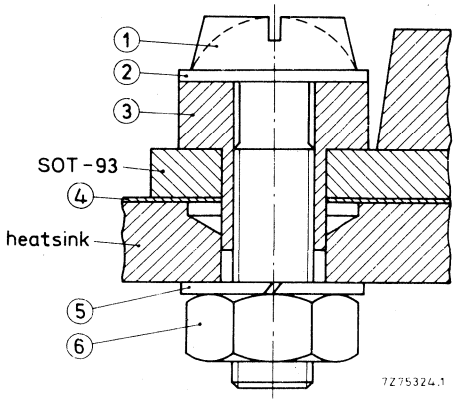

Fig. 4 Assembly.
See also Fig. 9.

(1) M3 screw
(2) plain washer
(3) insulating bush (56368b)
(4) mica insulator (56368c)
(5) lock washer
(6) M3 nut

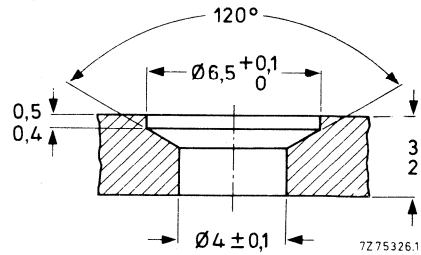

Fig. 5 Heatsink requirements up to 800 V insulation.

Insulated screw mounting with tapped hole; up to 800 V.

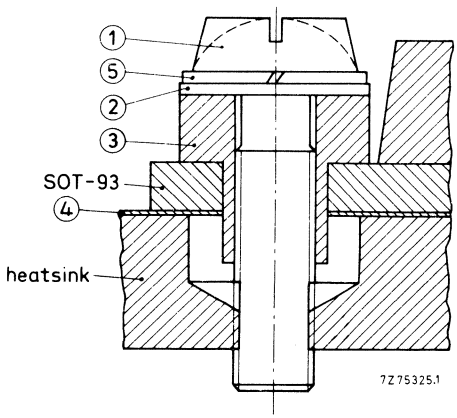

Fig. 6 Assembly.
See also Fig. 9.

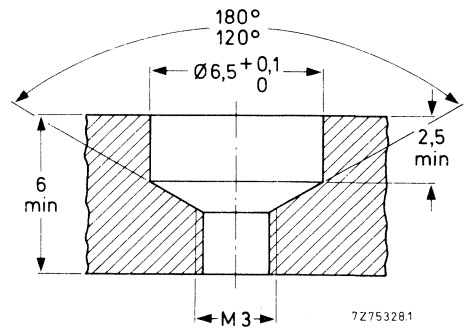

Fig. 7 Heatsink requirements up to 800 V insulation.

(1) M3 screw
(2) plain washer
(3) insulating bush (56368b)
(4) mica insulator (56368c)
(5) lock washer

Insulated screw mounting with insert nut; up to 500 V

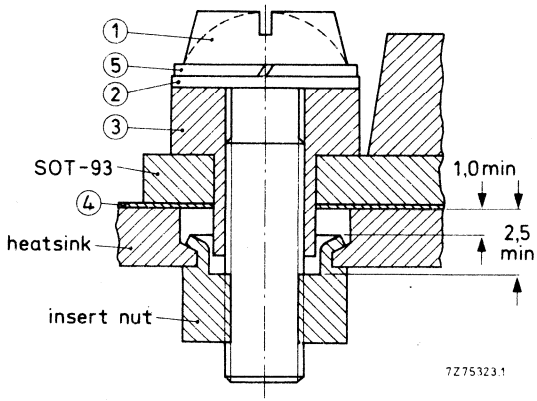

Fig. 8 Assembly and heatsink requirements for 500 V insulation. See also Fig. 3.

(1) M3 screw
(2) plain washer
(3) insulating bush (56368b)
(4) mica insulator (56368c)
(5) lock washer

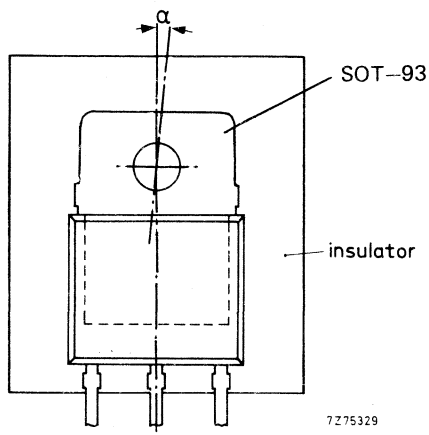

Fig. 9 Mica insulator.

The axial deviation (α) between SOT-93 and mica should not exceed 5°.

MOUNTING CONSIDERATIONS FOR STUD-MOUNTED DEVICES

Losses generated in a silicon device must flow through the case and to a lesser extent the leads.
The greatest proportion of the losses flow out through the case into a heat exchanger which can be either free convection cooled, forced convection or even liquid cooled. For the majority of devices in our range natural convection is generally adequate, however, where other considerations such as space saving must be taken into account then methods such as forced convection etc. can be considered.
The thermal path from junction to ambient may be considered as a number of resistances in series.
The first thermal resistance will be that of junction to mounting base, usually denoted by $R_{th\ j\text{-}mb}$.
The second is the contact thermal resistance $R_{th\ mb\text{-}h}$ and finally there is the thermal resistance of the heatsink $R_{th\ h\text{-}a}$.
In the rating curves, the contact thermal resistance and heatsink thermal resistances are combined as a single figure - $R_{th\ mb\text{-}a}$.
In addition to the steady state thermal conditions of the system, consideration should also be given to the possibility of any transient thermal excursions. These can be caused for example by starting conditions or overloads and in order to calculate the effect on the device, a graph of transient thermal resistance $Z_{th\ j\text{-}mb}$ as a function of time is given in each data sheet.

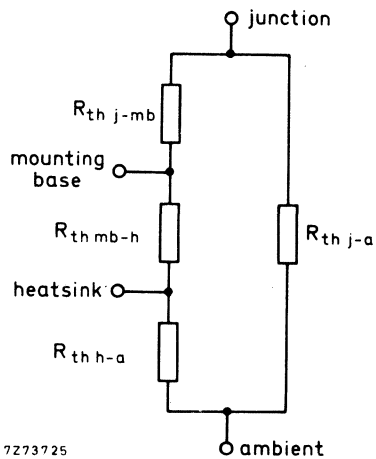

When mounting the device on the heatsink, care should be taken that the contact surfaces are free from burrs or projections of any kind and must be thoroughly clean.
In the case where an anodised heatsink is used, the anodising should be removed from the contact surface ensuring good electrical and thermal contact.
The contact surfaces should be smeared with a metallic oxide-loaded grease to ensure good heat transfer.
Where the device is mounted in a tapped hole, care should be taken that the hole is perpendicular to the surface of the heatsink. When mounting the device to the heatsink, it is essential that a proper torque wrench is used, applying the correct amount of torque as specified in the published data.
Excessive torque can distort the threads of the device and may even cause mechanical stress on the wafer, leading to the possible failure.
Where isolation of the device from the heatsink is required, it is common practice to use a mica washer between contact surfaces, and where a clearance hole is used, a p.t.f.e. insulating bush is inserted. A metallic oxide-loaded heatsink compound should be smeared on all contact surfaces, including the mica washer, to ensure optimum heat transfer. The use of ordinary silicone grease is not recommended.

MOUNTING INSTRUCTIONS FOR TO-48 ENVELOPES

GENERAL DATA AND INSTRUCTIONS

Mounting instructions for up to 2000 V insulation using 56264b insulating bush and 56264a mica washer.

HEATSINK REQUIREMENTS

Mounting holes must be deburred.

MOUNTING TORQUES

Minimum torque (for good heat transfer)	1.7 Nm (17 kg cm)
Maximum torque (to avoid damaging device)	3.5 Nm (35 kg cm)

THERMAL DATA

The thermal resistance from mounting base to heatsink ($R_{th\ mb\text{-}h}$) can be reduced by applying a heat conducting compound between device and heatsink. For insulated mounting the compound should be applied to the bottom of both device and insulator.

Thermal resistance from mounting base
to heatsink (insulated mounting using 56264a mica washer)

without heatsink compound	$R_{th\ mb\text{-}h}$	=	5	K/W
with heatsink compound	$R_{th\ mb\text{-}h}$	=	2.5	K/W

MOUNTING INSTRUCTIONS FOR UP TO 2000 V INSULATION

Using insulating bush 56264b and mica washer 56264a.

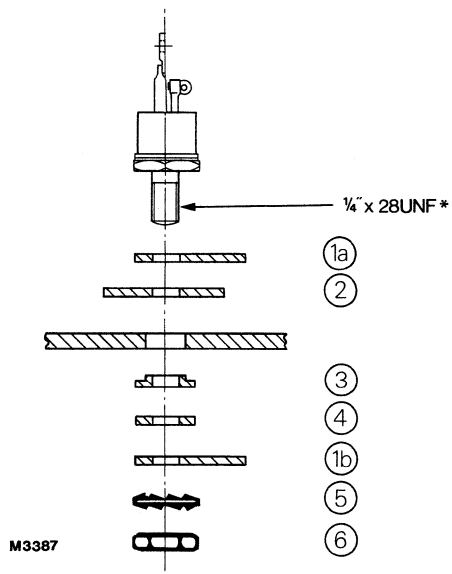

Fig.1

(1a); (1b) tag — alternative positions
(2) mica washer 56264a
(3) insulating bush 56264b
(4) plain washer (may be omitted if tag used in position 1b)
(5) toothed lock washer (supplied with device)
(6) ¼" x 28 UNF nut (supplied with device)*

*or M6 dependent on type.

MOUNTING INSTRUCTIONS FOR TO-64 ENVELOPES

GENERAL DATA AND INSTRUCTIONS

Mounting instructions for up to 2000 V insulation using 56295c insulating bush and 56295a mica washer.

Mounting instructions for up to 2000 V insulation using 56295b insulating ring and two 56295a mica washers.

HEATSINK REQUIREMENTS

Mounting holes must be deburred.

MOUNTING TORQUES

Minimum torque (for good heat transfer)	0.9 Nm (9 kg cm)
Maximum torque (to avoid damaging device)	1.7 Nm (17 kg cm)

THERMAL DATA

The thermal resistance from mounting base to heatsink ($R_{th\ mb\text{-}h}$) can be reduced by applying a heat conducting compound between device and heatsink. For insulated mounting the compound should be applied to the bottom of both device and insulator.

Thermal resistance from mounting base to heatsink
(insulated mounting using 56295a mica washer)

without heatsink compound	$R_{th\ mb\text{-}h}$	=	5	K/W
with heatsink compound	$R_{th\ mb\text{-}h}$	=	2.5	K/W

MOUNTING INSTRUCTIONS FOR UP TO 2000 V INSULATION

Using 56295c insulating bush and 56295a mica washer.

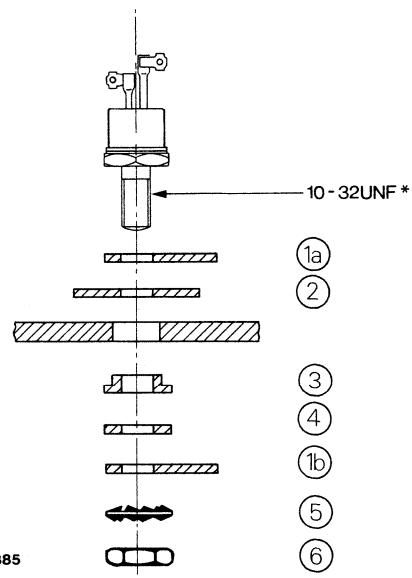

Fig.1

(1a);(1b)	tag — alternative positions
(2)	mica washer 56295a
(3)	insulating bush 56295c
(4)	plain washer (may be omitted if tag used in position 1b)
(5)	toothed lock washer (supplied with device)
(6)	10-32 UNF nut (supplied with device)*

*or M5 dependent on type.

MOUNTING INSTRUCTIONS FOR UP TO 2000 V INSULATION

Using insulating ring 56295b and two mica washers 56295a.

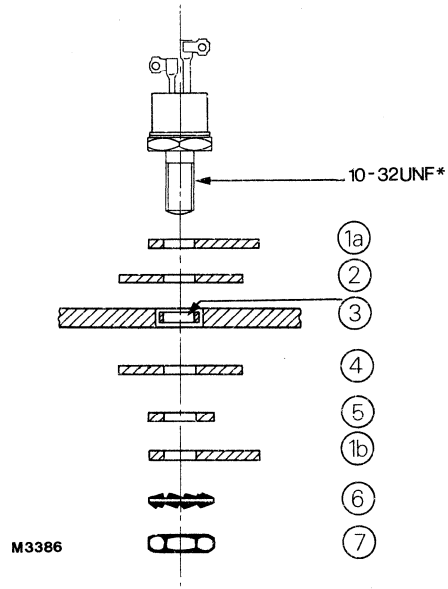

Fig. 2

(1a); (1b) tag — alternative positions
(2) mica washer 56295a
(3) insulating ring 56295b
(4) mica washer 56295a
(5) plain washer (may be omitted if tag used in position 1b)
(6) toothed lock washer (supplied with device)
(7) 10-32 nut (supplied with device)*

*or M5 dependent on type.

INDEX OF TYPE NUMBERS

The inclusion of a type number in this publication does not necessarily imply its availability.

Type no.	book	section	Type no.	book	section	Type no.	book	section
BA220	SC01	SD	BAS28	SC01/10	SD/Mm	BAV45	SC01	Sp
BA221	SC01	SD	BAS29	SC01/10	SD/Mm	BAV70	SC01/10	SD/Mm
BA223	SC01	T	BAS31	SC01/10	SD/Mm	BAV74	SC01	SD
BA281	SC01	SD	BAS32	SC01/10	SD/Mm	BAV99	SC01/10	SD/Mm
BA314	SC01	Vrg	BAS32L	SC01/10	SD/Mm	BAV100	SC01/10	SD/Mm
BA315	SC01	Vrg	BAS35	SC01/10	SD/Mm	BAV101	SC01/10	SD/Mm
BA316	SC01	SD	BAS45	SC01	SD	BAV102	SC01/10	SD/Mm
BA317	SC01	SD	BAS45L	SC01/10	SD/Mm	BAV103	SC01/10	SD/Mm
BA318	SC01	SD	BAS56	SC01/10	SD/Mm	BAV105	SC01/10	SD/Mm
BA423	SC01	T	BAS85	SC01	SD	BAW56	SC01/10	SD/Mm
BA423L	SC01	T	BAT17	SC01/10	T/Mm	BAW62	SC01	SD
BA480	SC01	T	BAT18	SC01/10	T/Mm	BAX12	SC01	SD
BA481	SC01	T	BAT54	SC01/10	SD/Mm	BAX14	SC01	SD
BA482	SC01	T	BAT74	SC01/10	SD/Mm	BAX18	SC01	SD
BA483	SC01	T	BAT81	SC01	T	BAY80	SC01	SD
BA484	SC01	T	BAT82	SC01	T	BB112	SC01	T
BA682	SC01/10	T/Mm	BAT83	SC01	T	BB119	SC01	T
BA683	SC01/10	T/Mm	BAT85	SC01	T	BB130	SC01	T
BAS11	SC01	SD	BAT86	SC01	T	BB204B	SC01	T
BAS15	SC01	SD	BAV10	SC01	SD	BB204G	SC01	T
BAS16	SC01/10	SD/Mm	BAV18	SC01	SD	BB212	SC01	T
BAS17	SC01/10	Vrg/Mm	BAV19	SC01	SD	BB215	SC01/10	SD/Mm
BAS19	SC01/10	SD/Mm	BAV20	SC01	SD	BB219	SC01/10	SD/Mm
BAS20	SC01/10	SD/Mm	BAV21	SC01	SD	BB240	SC01/10	T/Mm
BAS21	SC01/10	SD/Mm	BAV23	SC01/10	SD/Mm	BB241	SC01/10	T/Mm

Key to handbook sections

A = Accessories
FET = Field-effect transistors
I = Infrared devices
LED = Light-emitting diodes
LCD = Liquid crystal displays
Mm = Surface-mounted devices
M = Microwave transistors
P = Low-frequency power transistors and modules
PDT = Photodiodes or transistors
Ph = Photoconductive devices
PhC = Photocouplers
PM = Power MOS transistors
R = Rectifier diodes
RFP = RF power transistors and modules
RT = Triplers
Sen = Semiconductor sensors
SD = Small-signal diodes
Sm = Small-signal transistors
Sp = Special diodes
SP = Low-frequency switching power diodes
St = Rectifier stacks
T = Tuner diodes
Th = Thyristors
Tri = Triacs
TS = Transient suppressor diodes
Vrf = Voltage reference diodes
Vrg = Voltage regulator diodes
WBT = Wideband hybrid IC transistors
WBM = Wideband hybrid IC modules

* series.

Type no.	book	section	Type no.	book	section	Type no.	book	section
BB405B	SC01	T	BC557	SC04	Sm	BCP69	SC10	Mm
BB417	SC01	T	BC558	SC04	Sm	BCV26	SC10	Mm
BB804	SC01/10	T/Mm	BC559	SC04	Sm	BCV27	SC10	Mm
BB809	SC01	T	BC560	SC04	Sm	BCV28	SC10	Mm
BB909A	SC01	T	BC635	SC04	Sm	BCV29	SC10	Mm
BB909B	SC01	T	BC636	SC04	Sm	BCV46	SC10	Mm
BB910	SC01	T	BC637	SC04	Sm	BCV47	SC10	Mm
BB911	SC01	T	BC638	SC04	Sm	BCV48	SC10	Mm
BBY31	SC01/10	T/Mm	BC639	SC04	Sm	BCV49	SC10	Mm
BBY39	SC01	T	BC640	SC04	Sm	BCV61	SC10	Mm
BBY40	SC01/10	T/Mm	BC807	SC10	Mm	BCV62	SC10	Mm
BBY42	SC01	T	BC808	SC10	Mm	BCV63	SC10	Mm
BBY62	SC01	T	BC817	SC10	Mm	BCV64	SC10	Mm
BC107	SC04	Sm	BC818	SC10	Mm	BCV65	SC10	Mm
BC108	SC04	Sm	BC846	SC10	Mm	BCV71	SC10	Mm
BC109	SC04	Sm	BC847	SC10	Mm	BCV71R	SC10	Mm
BC140	SC04	Sm	BC848	SC10	Mm	BCV72	SC10	Mm
BC141	SC04	Sm	BC849	SC10	Mm	BCV72R	SC10	Mm
BC160	SC04	Sm	BC850	SC10	Mm	BCW29	SC10	Mm
BC161	SC04	Sm	BC856	SC10	Mm	BCW29R	SC10	Mm
BC177	SC04	Sm	BC857	SC10	Mm	BCW30	SC10	Mm
BC178	SC04	Sm	BC858	SC10	Mm	BCW30R	SC10	Mm
BC179	SC04	Sm	BC859	SC10	Mm	BCW31	SC10	Mm
BC264A	SC07	FET	BC860	SC10	Mm	BCW31R	SC10	Mm
BC264B	SC07	FET	BC868	SC10	Mm	BCW32	SC10	Mm
BC246C	SC07	FET	BC869	SC10	Mm	BCW32R	SC10	Mm
BC264D	SC07	FET	BCF29	SC10	Mm	BCW33	SC10	Mm
BC327	SC04	Sm	BCF29R	SC10	Mm	BCW33R	SC10	Mm
BC327A	SC04	Sm	BCF30	SC10	Mm	BCW60*	SC10	Mm
BC328	SC04	Sm	BCF30R	SC10	Mm	BCW61*	SC10	Mm
BC337	SC04	Sm	BCF32	SC10	Mm	BCW69	SC10	Mm
BC337A	SC04	Sm	BCF32R	SC10	Mm	BCW69R	SC10	Mm
BC338	SC04	Sm	BCF33	SC10	Mm	BCW70	SC10	Mm
BC368	SC04	Sm	BCF33R	SC10	Mm	BCW70R	SC10	Mm
BC369	SC04	Sm	BCF70	SC10	Mm	BCW71	SC10	Mm
BC375	SC04	Sm	BCF70R	SC10	Mm	BCW71R	SC10	Mm
BC376	SC04	Sm	BCF81	SC10	Mm	BCW72	SC10	Mm
BC516	SC04	Sm	BCF81R	SC10	Mm	BCW72R	SC10	Mm
BC517	SC04	Sm	BCP51	SC10	Mm	BCW81	SC10	Mm
BC546	SC04	Sm	BCP52	SC10	Mm	BCW81R	SC10	Mm
BC547	SC04	Sm	BCP53	SC10	Mm	BCW89	SC10	Mm
BC548	SC04	Sm	BCP54	SC10	Mm	BCW89R	SC10	Mm
BC549	SC04	Sm	BCP55	SC10	Mm	BCX17	SC10	Mm
BC550	SC04	Sm	BCP56	SC10	Mm	BCX17R	SC10	Mm
BC556	SC04	Sm	BCP68	SC10	Mm	BCX18	SC10	Mm

Type no.	book	section	Type no.	book	section	Type no.	book	section
BCX18R	SC10	Mm	BD204F	SC05	P	BD337	SC05	P
BCX19	SC10	Mm	BD226	SC05	P	BD338	SC05	P
BCX19R	SC10	Mm	BD227	SC05	P	BD433	SC05	P
BCX20	SC10	Mm	BD228	SC05	P	BD434	SC05	P
BCX20R	SC10	Mm	BD229	SC05	P	BD435	SC05	P
BCX51	SC10	Mm	BD230	SC05	P	BD436	SC05	P
BCX52	SC10	Mm	BD231	SC05	P	BD437	SC05	P
BCX53	SC10	Mm	BD233	SC05	P	BD438	SC05	P
BCX54	SC10	Mm	BD234	SC05	P	BD643	SC05	P
BCX55	SC10	Mm	BD235	SC05	P	BD643F	SC05	P
BCX56	SC10	Mm	BD236	SC05	P	BD644	SC05	P
BCX58	SC04	Sm	BD237	SC05	P	BD644F	SC05	P
BCX59	SC04	Sm	BD238	SC05	P	BD645	SC05	P
BCX70*	SC10	Mm	BD239	SC05	P	BD645F	SC05	P
BCX71*	SC10	Mm	BD239A	SC05	P	BD646	SC05	P
BCX78	SC04	Sm	BD239B	SC05	P	BD646F	SC05	P
BCX79	SC04	Sm	BD239C	SC05	P	BD647	SC05	P
BCY56	SC04	Sm	BD240	SC05	P	BD647F	SC05	P
BCY57	SC04	Sm	BD240A	SC05	P	BD648	SC05	P
BCY58	SC04	Sm	BD240B	SC05	P	BD648F	SC05	P
BCY59	SC04	Sm	BD240C	SC05	P	BD649	SC05	P
BCY65	SC04	Sm	BD241	SC05	P	BD649F	SC05	P
BCY70	SC04	Sm	BD241A	SC05	P	BD650	SC05	P
BCY71	SC04	Sm	BD241B	SC05	P	BD650F	SC05	P
BCY72	SC04	Sm	BD241C	SC05	P	BD651	SC05	P
BCY78	SC04	Sm	BD242	SC05	P	BD651F	SC05	P
BCY79	SC04	Sm	BD242A	SC05	P	BD652	SC05	P
BCY87	SC04	Sm	BD242B	SC05	P	BD652F	SC05	P
BCY88	SC04	Sm	BD242C	SC05	P	BD675	SC05	P
BCY89	SC04	Sm	BD243	SC05	P	BD676	SC05	P
BD131	SC05	P	BD243A	SC05	P	BD677	SC05	P
BD132	SC05	P	BD243B	SC05	P	BD678	SC05	P
BD135	SC05	P	BD243C	SC05	P	BD679	SC05	P
BD136	SC05	P	BD244	SC05	P	BD680	SC05	P
BD137	SC05	P	BD244A	SC05	P	BD681	SC05	P
BD138	SC05	P	BD244B	SC05	P	BD682	SC05	P
BD139	SC05	P	BD244C	SC05	P	BD683	SC05	P
BD140	SC05	P	BD329	SC05	P	BD684	SC05	P
BD201	SC05	P	BD330	SC05	P	BD719	SC05	P
BD201F	SC05	P	BD331	SC05	P	BD720	SC05	P
BD202	SC05	P	BD332	SC05	P	BD721	SC05	P
BD202F	SC05	P	BD333	SC05	P	BD722	SC05	P
BD203	SC05	P	BD334	SC05	P	BD723	SC05	P
BD203F	SC05	P	BD335	SC05	P	BD724	SC05	P
BD204	SC05	P	BD336	SC05	P	BD725	SC05	P

Type no.	book	section	Type no.	book	section	Type no.	book	section
BD726	SC05	P	BD949	SC05	P	BDT32AF	SC05	P
BD825	SC05	P	BD949F	SC05	P	BDT32B	SC05	P
BD826	SC05	P	BD950	SC05	P	BDT32BF	SC05	P
BD827	SC05	P	BD950F	SC05	P	BDT32C	SC05	P
BD828	SC05	P	BD951	SC05	P	BDT32CF	SC05	P
BD829	SC05	P	BD951F	SC05	P	BDT32D	SC05	P
BD830	SC05	P	BD952	SC05	P	BDT32DF	SC05	P
BD839	SC05	P	BD952F	SC05	P	BDT41A	SC05	P
BD840	SC05	P	BD953	SC05	P	BDT41AF	SC05	P
BD841	SC05	P	BD953F	SC05	P	BDT41B	SC05	P
BD842	SC05	P	BD954	SC05	P	BDT41BF	SC05	P
BD843	SC05	P	BD954F	SC05	P	BDT41C	SC05	P
BD844	SC05	P	BD955	SC05	P	BDT41CF	SC05	P
BD933	SC05	P	BD955F	SC05	P	BDT42	SC05	P
BD933F	SC05	P	BD956	SC05	P	BDT42F	SC05	P
BD934	SC05	P	BD956F	SC05	P	BDT42A	SC05	P
BD934F	SC05	P	BDT29	SC05	P	BDT42AF	SC05	P
BD935	SC05	P	BDT29F	SC05	P	BDT42B	SC05	P
BD935F	SC05	P	BDT29A	SC05	P	BDT42BF	SC05	P
BD936	SC05	P	BDT29AF	SC05	P	BDT42C	SC05	P
BD936F	SC05	P	BDT29B	SC05	P	BDT42CF	SC05	P
BD937	SC05	P	BDT29BF	SC05	P	BDT60	SC05	P
BD937F	SC05	P	BDT29C	SC05	P	BDT60F	SC05	P
BD938	SC05	P	BDT29CF	SC05	P	BDT60A	SC05	P
BD938F	SC05	P	BDT30	SC05	P	BDT60AF	SC05	P
BD939	SC05	P	BDT30F	SC05	P	BDT60B	SC05	P
BD939F	SC05	P	BDT30A	SC05	P	BDT60BF	SC05	P
BD940	SC05	P	BDT30AF	SC05	P	BDT60C	SC05	P
BD940F	SC05	P	BDT30B	SC05	P	BDT60CF	SC05	P
BD941	SC05	P	BDT30BF	SC05	P	BDT61	SC05	P
BD941F	SC05	P	BDT30C	SC05	P	BDT61F	SC05	P
BD942	SC05	P	BDT30CF	SC05	P	BDT61A	SC05	P
BD942F	SC05	P	BDT31	SC05	P	BDT61AF	SC05	P
BD943	SC05	P	BDT31F	SC05	P	BDT61B	SC05	P
BD943F	SC05	P	BDT31A	SC05	P	BDT61BF	SC05	P
BD944	SC05	P	BDT31AF	SC05	P	BDT61C	SC05	P
BD944F	SC05	P	BDT31B	SC05	P	BDT61CF	SC05	P
BD945	SC05	P	BDT31BF	SC05	P	BDT62	SC05	P
BD945F	SC05	P	BDT31C	SC05	P	BDT62F	SC05	P
BD946	SC05	P	BDT31CF	SC05	P	BDT62A	SC05	P
BD946F	SC05	P	BDT31D	SC05	P	BDT62AF	SC05	P
BD947	SC05	P	BDT31DF	SC05	P	BDT62B	SC05	P
BD947F	SC05	P	BDT32	SC05	P	BDT62BF	SC05	P
BD948	SC05	P	BDT32F	SC05	P	BDT62C	SC05	P
BD948F	SC05	P	BDT32A	SC05	P	BDT62CF	SC05	P

Type no.	book	section	Type no.	book	section	Type no.	book	section
BDT63	SC05	P	BDT93F	SC05	P	BDX63C	SC05	P
BDT63F	SC05	P	BDT94	SC05	P	BDX64	SC05	P
BDT63A	SC05	P	BDT94F	SC05	P	BDX64A	SC05	P
BDT63AF	SC05	P	BDT95	SC05	P	BDX64B	SC05	P
BDT63B	SC05	P	BDT95F	SC05	P	BDX64C	SC05	P
BDT63BF	SC05	P	BDT96	SC05	P	BDX65	SC05	P
BDT63C	SC05	P	BDT96F	SC05	P	BDX65A	SC05	P
BDT63CF	SC05	P	BDV64	SC05	P	BDX65B	SC05	P
BDT64	SC05	P	BDV64A	SC05	P	BDX65C	SC05	P
BDT64F	SC05	P	BDV64B	SC05	P	BDX66	SC05	P
BDT64A	SC05	P	BDV64C	SC05	P	BDX66A	SC05	P
BDT64AF	SC05	P	BDV65	SC05	P	BDX66B	SC05	P
BDT64B	SC05	P	BDV65A	SC05	P	BDX66C	SC05	P
BDT64BF	SC05	P	BDV65B	SC05	P	BDX67	SC05	P
BDT64C	SC05	P	BDV65C	SC05	P	BDX67A	SC05	P
BDT64CF	SC05	P	BDV66A	SC05	P	BDX67B	SC05	P
BDT65	SC05	P	BDV66B	SC05	P	BDX67C	SC05	P
BDT65F	SC05	P	BDV66C	SC05	P	BDX68	SC05	P
BDT65A	SC05	P	BDV66D	SC05	P	BDX68A	SC05	P
BDT65AF	SC05	P	BDV67A	SC05	P	BDX68B	SC05	P
BDT65B	SC05	P	BDV67B	SC05	P	BDX68C	SC05	P
BDT65BF	SC05	P	BDV67C	SC05	P	BDX69	SC05	P
BDT65C	SC05	P	BDV67D	SC05	P	BDX69A	SC05	P
BDT65CF	SC05	P	BDV91	SC05	P	BDX69B	SC05	P
BDT81	SC05	P	BDV92	SC05	P	BDX69C	SC05	P
BDT81F	SC05	P	BDV93	SC05	P	BDX77	SC05	P
BDT82	SC05	P	BDV94	SC05	P	BDX77F	SC05	P
BDT82F	SC05	P	BDV95	SC05	P	BDX78	SC05	P
BDT83	SC05	P	BDV96	SC05	P	BDX78F	SC05	P
BDT83F	SC05	P	BDX35	SC05	P	BDX91	SC05	P
BDT84	SC05	P	BDX36	SC05	P	BDX92	SC05	P
BDT84F	SC05	P	BDX37	SC05	P	BDX93	SC05	P
BDT85	SC05	P	BDX42	SC05	P	BDX94	SC05	P
BDT85F	SC05	P	BDX43	SC05	P	BDX95	SC05	P
BDT86	SC05	P	BDX44	SC05	P	BDX96	SC05	P
BDT86F	SC05	P	BDX45	SC05	P	BDY90	SC05	P
BDT87	SC05	P	BDX46	SC05	P	BDY91	SC05	P
BDT87F	SC05	P	BDX47	SC05	P	BDY92	SC05	P
BDT88	SC05	P	BDX62	SC05	P	BF198	SC04	Sm
BDT88F	SC05	P	BDX62A	SC05	P	BF199	SC04	Sm
BDT91	SC05	P	BDX62B	SC05	P	BF240	SC04	Sm
BDT91F	SC05	P	BDX62C	SC05	P	BF241	SC04	Sm
BDT92	SC05	P	BDX63	SC05	P	BF245A	SC07	FET
BDT92F	SC05	P	BDX63A	SC05	P	BF245B	SC07	FET
BDT93	SC05	P	BDX63B	SC05	P	BF245C	SC07	FET

Type no.	book	section	Type no.	book	section	Type no.	book	section
BF247A	SC07	FET	BF820	SC10	Mm	BFG97	SC14/10	WBT/Mm
BF247B	SC07	FET	BF821	SC10	Mm	BFG135	SC14/10	WBT/Mm
BF247C	SC07	FET	BF822	SC10	Mm	BFG195	SC14	WBT
BF256A	SC07	FET	BF823	SC10	Mm	BFG198	SC14/10	WBT/Mm
BF256B	SC07	FET	BF824	SC10	Mm	BFP90A	SC14	WBT
BF256C	SC07	FET	BF840	SC10	Mm	BFP91A	SC14	WBT
BF324	SC04	Sm	BF841	SC10	Mm	BFP96	SC14	WBT
BF370	SC04	Sm	BF926	SC04	Sm	BFQ10	SC07	FET
BF410A	SC07	FET	BF936	SC04	Sm	BFQ11	SC07	FET
BF410B	SC07	FET	BF939	SC04	Sm	BFQ12	SC07	FET
BF410C	SC07	FET	BF960	SC07	FET	BFQ13	SC07	FET
BF410D	SC07	FET	BF964S	SC07	FET	BFQ14	SC07	FET
BF420	SC04	Sm	BF965	SC07	FET	BFQ15	SC07	FET
BF421	SC04	Sm	BF966S	SC07	FET	BFQ16	SC07	FET
BF422	SC04	Sm	BF967	SC04	Sm	BFQ17	SC14/10	WBT/Mm
BF423	SC04	Sm	BF970	SC04	Sm	BFQ18A	SC14/10	WBT/Mm
BF450	SC04	Sm	BF970A	SC04	Sm	BFQ19	SC14/10	WBT/Mm
BF451	SC04	Sm	BF979	SC04	Sm	BFQ22S	SC14	WBT
BF483	SC04	Sm	BF980	SC07	FET	BFQ23	SC14	WBT
BF485	SC04	Sm	BF980A	SC07	FET	BFQ23C	SC14	WBT
BF487	SC04	Sm	BF981	SC07	FET	BFQ24	SC14	WBT
BF494	SC04	Sm	BF982	SC07	FET	BFQ32	SC14	WBT
BF495	SC04	Sm	BF989	SC07/10	FET/Mm	BFQ32C	SC14	WBT
BF496	SC04	Sm	BF990A	SC07/10	FET/Mm	BFQ32M	SC14	WBT
BF510	SC07/10	FET/Mm	BF990AR	SC07/10	FET/Mm	BFQ32S	SC14	WBT
BF511	SC07/10	FET/Mm	BF991	SC07/10	FET/Mm	BFQ33	SC14	WBT
BF512	SC07/10	FET/Mm	BF992	SC07/10	FET/Mm	BFQ33C	SC14	WBT
BF513	SC07/10	FET/Mm	BF992R	SC07/10	FET/Mm	BFQ34	SC14	WBT
BF550	SC10	Mm	BF994S	SC07/10	FET/Mm	BFQ34T	SC14	WBT
BF550R	SC10	Mm	BF994SR	SC07/10	FET/Mm	BFQ42	SC08	RFP
BF569	SC10	Mm	BF996S	SC07/10	FET/Mm	BFQ43	SC08	RFP
BF570	SC10	Mm	BF996SR	SC07/10	FET/Mm	BFQ43S	SC08	RFP
BF579	SC10	Mm	BF997	SC07/10	FET/Mm	BFQ51	SC14	WBT
BF620	SC10	Mm	BFG23	SC14	WBT	BFQ51C	SC14	WBT
BF621	SC10	Mm	BFG32	SC14	WBT	BFQ52	SC14	WBT
BF622	SC10	Mm	BFG34	SC14	WBT	BFQ53	SC14	WBT
BF623	SC10	Mm	BFG35	SC14/10	WBT/Mm	BFQ63	SC14	WBT
BF660	SC10	Mm	BFG51	SC14	WBT	BFQ65	SC14	WBT
BF660R	SC10	Mm	BFG65	SC14	WBT	BFQ66	SC14	WBT
BF689K	SC14	WBT	BFG67	SC14/10	WBT/Mm	BFQ67	SC14/10	WBT/Mm
BF720	SC10	Mm	BFG90A	SC14	WBT	BFQ68	SC14	WBT
BF721	SC10	Mm	BFG91A	SC14	WBT	BFQ136	SC14	WBT
BF722	SC10	Mm	BFG92A	SC14	WBT	BFR29	SC07	FET
BF723	SC10	Mm	BFG93A	SC14	WBT	BFR30	SC07/10	FET/Mm
BF763	SC14	WBT	BFG96	SC14	WBT	BFR31	SC07/10	FET/Mm

Type no.	book	section	Type no.	book	section	Type no.	book	section
BFR49	SC14	WBT	BFW30	SC14	WBT	BGY49B	SC09	RFP
BFR53	SC14/10	WBT/Mm	BFW61	SC07	FET	BGY50	SC14	WBM
BFR54	SC04	Sm	BFW92	SC14	WBT	BGY51	SC14	WBM
BFR64	SC14	WBT	BFW92A	SC14	WBT	BGY52	SC14	WBM
BFR65	SC14	WBT	BFW93	SC14	WBT	BGY53	SC14	WBM
BFR84	SC07	FET	BFX34	SC04	Sm	BGY54	SC14	WBM
BFR90	SC14	WBT	BFX89	SC14	WBT	BGY55	SC14	WBM
BFR90A	SC14	WBT	BFY50	SC04	Sm	BGY56	SC14	WBM
BFR91	SC14	WBT	BFY51	SC04	Sm	BGY57	SC14	WBM
BFR91A	SC14	WBT	BFY52	SC04	Sm	BGY58	SC14	WBM
BFR92	SC14/10	WBT/Mm	BFY55	SC04	Sm	BGY58A	SC14	WBM
BFR92A	SC14/10	WBT/Mm	BFY90	SC14	WBT	BGY59	SC14	WBM
BFR93	SC14/10	WBT/Mm	BG2000	SC01	RT	BGY60	SC14	WBM
BFR93A	SC14/10	WBT/Mm	BG2097	SC01	RT	BGY61	SC14	WBM
BFR94	SC14	WBT	BGD102	SC14	WBM	BGY65	SC14	WBM
BFR95	SC14	WBT	BGD102E	SC14	WBM	BGY67	SC14	WBM
BFR96	SC14	WBT	BGD104	SC14	WBM	BGY67A	SC14	WBM
BFR96S	SC14	WBT	BGD104E	SC14	WBM	BGY70	SC14	WBM
BFR101A	SC07/10	FET/Mm	BGD502	SC14	WBM	BGY71	SC14	WBM
BFR101B	SC07/10	FET/Mm	BGD504	SC14	WBM	BGY74	SC14	WBM
BFS17	SC14/10	WBT	BGX885	SC14	WBM	BGY75	SC14	WBM
BFS17A	SC14	WBT	BGY22	SC09	RFP	BGY78	SC14	WBM
BFS18	SC10	Mm	BGY22A	SC09	RFP	BGY84	SC14	WBM
BFS18R	SC10	Mm	BGY23	SC09	RFP	BGY84A	SC14	WBM
BFS19	SC10	Mm	BGY23A	SC09	RFP	BGY85	SC14	WBM
BFS19R	SC10	Mm	BGY32	SC09	RFP	BGY85A	SC14	WBM
BFS20	SC10	Mm	BGY33	SC09	RFP	BGY86	SC14	WBM
BFS20R	SC10	Mm	BGY35	SC09	RFP	BGY87	SC14	WBM
BFS21	SC07	FET	BGY36	SC09	RFP	BGY88	SC14	WBM
BFS21A	SC07	FET	BGY40A	SC09	RFP	BGY90A	SC09	RFP
BFS22A	SC08	RFP	BGY40B	SC09	RFP	BGY90B	SC09	RFP
BFS23A	SC08	RFP	BGY41A	SC09	RFP	BGY91A	SC09	RFP
BFT24	SC14	WBT	BGY41B	SC09	RFP	BGY91B	SC09	RFP
BFT25	SC14/10	WBT/Mm	BGY43	SC09	RFP	BGY93A	SC09	RFP
BFT44	SC04	Sm	BGY45A	SC09	RFP	BGY93B	SC09	RFP
BFT45	SC04	Sm	BGY45B	SC09	RFP	BGY93C	SC09	RFP
BFT46	SC07/10	FET/Mm	BGY45C	SC09	RFP	BGY94A	SC09	RFP
BFT92	SC14/10	WBT/Mm	BGY46A	SC09	RFP	BGY94B	SC09	RFP
BFT93	SC14/10	WBT/Mm	BGY46B	SC09	RFP	BGY94C	SC09	RFP
BFW10	SC07	FET	BGY47A	SC09	RFP	BGY95A	SC09	RFP
BFW11	SC07	FET	BGY47F	SC09	RFP	BGY95B	SC09	RFP
BFW12	SC07	FET	BGY48A	SC09	RFP	BGY96A	SC09	RFP
BFW13	SC07	FET	BGY48B	SC09	RFP	BGY96B	SC09	RFP
BFW16A	SC14	WBT	BGY48C	SC09	RFP	BGY110A	SC09	RFP
BFW17A	SC14	WBT	BGY49A	SC09	RFP	BGY110B	SC09	RFP

Type no.	book	section	Type no.	book	section	Type no.	book	section
BGY584A	SC14	WBM	BLV25	SC08	RFP	BLW89	SC08	RFP
BGY585A	SC14	WBM	BLV30	SC08	RFP	BLW90	SC08	RFP
BGY586	SC14	WBM	BLV30/12	SC08	RFP	BLW91	SC08	RFP
BGY587	SC14	WBM	BLV31	SC08	RFP	BLW95	SC08	RFP
BLF145	SC08	RFP/FET	BLV32F	SC08	RFP	BLW96	SC08	RFP
BLF147	SC08	RFP/FET	BLV33	SC08	RFP	BLW97	SC08	RFP
BLF175	SC08	RFP/FET	BLV33F	SC08	RFP	BLW98	SC08	RFP
BLF177	SC08	RFP/FET	BLV36	SC08	RFP	BLW99	SC08	RFP
BLF221	SC08	RFP/FET	BLV37	SC08	RFP	BLX13	SC08	RFP
BLF241	SC08	RFP/FET	BLV38	SC08	RFP	BLX13C	SC08	RFP
BLF242	SC08	RFP/FET	BLV45/12	SC08	RFP	BLX14	SC08	RFP
BLF244	SC08	RFP/FET	BLV57	SC08	RFP	BLX15	SC08	RFP
BLF245	SC08	RFP/FET	BLV59	SC08	RFP	BLX39	SC08	RFP
BLF246	SC08	RFP/FET	BLV75/12	SC08	RFP	BLX65	SC08	RFP
BLF278	SC08	RFP/FET	BLV80/28	SC08	RFP	BLX65E	SC08	RFP
BLF368	SC08	RFP/FET	BLV90	SC08	RFP	BLX65ES	SC08	RFP
BLF378	SC08	RFP/FET	BLV90/SL	SC08	RFP	BLX67	SC08	RFP
BLF521	SC08	RFP/FET	BLV91	SC08	RFP	BLX68	SC08	RFP
BLF522	SC08	RFP/FET	BLV91/SL	SC08	RFP	BLX69A	SC08	RFP
BLF543	SC08	RFP/FET	BLV92	SC08	RFP	BLX91A	SC08	RFP
BLF544	SC08	RFP/FET	BLV93	SC08	RFP	BLX91CB	SC08	RFP
BLF545	SC08	RFP/FET	BLV94	SC08	RFP	BLX92A	SC08	RFP
BLF547	SC08	RFP/FET	BLV95	SC08	RFP	BLX93A	SC08	RFP
BLF548	SC08	RFP/FET	BLV97	SC08	RFP	BLX94A	SC08	RFP
BLT90/SL	SC08	RFP	BLV98	SC08	RFP	BLX94C	SC08	RFP
BLT91/SL	SC08	RFP	BLV99	SC08	RFP	BLX95	SC08	RFP
BLT92/SL	SC08	RFP	BLW29	SC08	RFP	BLX96	SC08	RFP
BLT93/SL	SC08	RFP	BLW31	SC08	RFP	BLX97	SC08	RFP
BLU20/12	SC08	RFP	BLW32	SC08	RFP	BLX98	SC08	RFP
BLU30/12	SC08	RFP	BLW33	SC08	RFP	BLY87A	SC08	RFP
BLU30/28	SC08	RFP	BLW34	SC08	RFP	BLY87C	SC08	RFP
BLU45/12	SC08	RFP	BLW50F	SC08	RFP	BLY88A	SC08	RFP
BLU50	SC08	RFP	BLW60	SC08	RFP	BLY88C	SC08	RFP
BLU51	SC08	RFP	BLW60C	SC08	RFP	BLY89A	SC08	RFP
BLU52	SC08	RFP	BLW76	SC08	RFP	BLY89C	SC08	RFP
BLU53	SC08	RFP	BLW77	SC08	RFP	BLY90	SC08	RFP
BLU60/12	SC08	RFP	BLW78	SC08	RFP	BLY91A	SC08	RFP
BLU60/28	SC08	RFP	BLW79	SC08	RFP	BLY91C	SC08	RFP
BLU97	SC08	RFP	BLW80	SC08	RFP	BLY92A	SC08	RFP
BLU98	SC08	RFP	BLW81	SC08	RFP	BLY92C	SC08	RFP
BLU99	SC08	RFP	BLW83	SC08	RFP	BLY93A	SC08	RFP
BLV10	SC08	RFP	BLW84	SC08	RFP	BLY93C	SC08	RFP
BLV11	SC08	RFP	BLW85	SC08	RFP	BLY94	SC08	RFP
BLV20	SC08	RFP	BLW86	SC08	RFP	BR100/03	SC03	Th
BLV21	SC08	RFP	BLW87	SC08	RFP	BR101	SC04	Sm

Type no.	book	section	Type no.	book	section	Type no.	book	section
BR210*	SC02	R	BSP51	SC10	Mm	BSR62	SC04	Sm
BR211*	SC02	R	BSP52	SC10	Mm	BSR111	SC07/10	FET/Mm
BR213*	SC02	R	BSP60	SC10	Mm	BSR112	SC07/10	FET/Mm
BR216*	SC02	R	BSP61	SC10	Mm	BSR113	SC07/10	FET/Mm
BR220*	SC02	R	BSP62	SC10	Mm	BSR174	SC07/10	FET/Mm
BRY39	SC04	Sm	BSP204	SC07	FET	BSR175	SC07/10	FET/Mm
BRY56	SC04	Sm	BSP204A	SC07	FET	BSR176	SC07/10	FET/Mm
BRY61	SC10	Mm	BSR12	SC10	Mm	BSR177	SC07/10	FET/Mm
BRY62	SC10	Mm	BSR12R	SC10	Mm	BSS38	SC04	Sm
BS107	SC07	FET	BSR13	SC10	Mm	BSS50	SC04	Sm
BS107A	SC07	FET	BSR13R	SC10	Mm	BSS51	SC04	Sm
BS170	SC07	FET	BSR14	SC10	Mm	BSS52	SC04	Sm
BS250	SC07	FET	BSR14R	SC10	Mm	BSS60	SC04	Sm
BSD10	SC07	FET	BSR15	SC10	Mm	BSS61	SC04	Sm
BSD12	SC07	FET	BSR15R	SC10	Mm	BSS62	SC04	Sm
BSD20	SC07/10	FET/m	BSR16	SC10	Mm	BSS63	SC10	Mm
BSD22	SC07/10	FET/M	BSR16R	SC10	Mm	BSS63R	SC10	Mm
BSD212	SC07	FET	BSR17	SC10	Mm	BSS64	SC10	Mm
BSD213	SC07	FET	BSR17R	SC10	Mm	BSS64R	SC10	Mm
BSD214	SC07	FET	BSR17A	SC10	Mm	BSS68	SC04	Sm
BSD215	SC07	FET	BSR17AR	SC10	Mm	BSS83	SC07/10	FET/Mm
BSJ111	SC07	FET	BSR18	SC10	Mm	BSS87	SC07	FET
BSJ112	SC07	FET	BSR18R	SC10	Mm	BSS89	SC07	FET
BSJ113	SC07	FET	BSR18A	SC10	Mm	BSS91	SC07	FET
BSJ174	SC07	FET	BSR18AR	SC10	Mm	BSS92	SC07	FET
BSJ175	SC07	FET	BSR19	SC10	Mm	BST15	SC10	Mm
BSJ176	SC07	FET	BSR19A	SC10	Mm	BST16	SC10	Mm
BSJ177	SC07	FET	BSR20	SC10	Mm	BST39	SC10	Mm
BSN205	SC07	FET	BSR20A	SC10	Mm	BST40	SC10	Mm
BSN205A	SC07	FET	BSR30	SC10	Mm	BST50	SC10	Mm
BSN254	SC07	FET	BSR31	SC10	Mm	BST51	SC10	Mm
BSN254A	SC07	FET	BSR32	SC10	Mm	BST52	SC10	Mm
BSP15	SC10	Mm	BSR33	SC10	Mm	BST60	SC10	Mm
BSP16	SC10	Mm	BSR40	SC10	Mm	BST61	SC10	Mm
BSP19	SC10	Mm	BSR41	SC10	Mm	BST62	SC10	Mm
BSP20	SC10	Mm	BSR42	SC10	Mm	BST70A	SC07	FET
BSP30	SC10	Mm	BSR43	SC10	Mm	BST72A	SC07	FET
BSP31	SC10	Mm	BSR50	SC04	Sm	BST74A	SC07	FET
BSP32	SC10	Mm	BSR51	SC04	Sm	BST76A	SC07	FET
BSP33	SC10	Mm	BSR52	SC04	Sm	BST78	SC07	FET
BSP40	SC10	Mm	BSR56	SC07/10	FET/Mm	BST80	SC07/10	FET/Mm
BSP41	SC10	Mm	BSR57	SC07/10	FET/Mm	BST82	SC07/10	FET/Mm
BSP42	SC10	Mm	BSR58	SC07/10	FET/Mm	BST84	SC07/10	FET/Mm
BSP43	SC10	Mm	BSR60	SC04	Sm	BST86	SC07/10	FET/Mm
BSP50	SC10	Mm	BSR61	SC04	Sm	BST95	SC07	FET

Type no.	book	section	Type no.	book	section	Type no.	book	section
BST97	SC07	FET	BT169*	SC03	Th	BUS133*	SC06	SP
BST100	SC07	FET	BT169W*	SC03	Th	BUT11	SC06	SP
BST110	SC07	FET	BTA140*	SC03	Tri	BUT11A	SC06	SP
BST120	SC07/10	FET/Mm	BTR59*	SC03	Tri	BUT11F	SC06	SP
BST122	SC07/10	FET/Mm	BTS59*	SC03	Tri	BUT11AF	SC06	SP
BSV15	SC04	Sm	BTV58*	SC03	Th	BUT12	SC06	SP
BSV16	SC04	Sm	BTW38*	SC03	Th	BUT12A	SC06	SP
BSV17	SC04	Sm	BTW40*	SC03	Th	BUT12F	SC06	SP
BSV52	SC10	Mm	BTW42*	SC03	Th	BUT12AF	SC06	SP
BSV52R	SC10	Mm	BTW43*	SC03	Tri	BUT18	SC06	SP
BSV64	SC04	Sm	BTW45*	SC03	Th	BUT18A	SC06	SP
BSV78	SC07	FET	BTW58*	SC03	Th	BUT18F	SC06	SP
BSV79	SC07	FET	BTY79*	SC03	Th	BUT18AF	SC06	SP
BSV80	SC07	FET	BTY91*	SC03	Th	BUT21B	SC06	SP
BSV81	SC07	FET	BU306	SC06	SP	BUT21C	SC06	SP
BSW66A	SC04	Sm	BU306F	SC06	SP	BUT21BF	SC06	SP
BSW67A	SC04	Sm	BU505	SC06	SP	BUT21CF	SC06	SP
BSW68A	SC04	Sm	BU506	SC06	SP	BUT22B	SC06	SP
BSX19	SC04	Sm	BU506D	SC06	SP	BUT22C	SC06	SP
BSX20	SC04	Sm	BU508A	SC06	SP	BUT22BF	SC06	SP
BSX32	SC04	Sm	BU508D	SC06	SP	BUT22CF	SC06	SP
BSX45	SC04	Sm	BU705	SC06	SP	BUT131	SC06	SP
BSX46	SC04	Sm	BU706	SC06	SP	BUV26	SC06	SP
BSX47	SC04	Sm	BU706D	SC06	SP	BUV26A	SC06	SP
BSX59	SC04	Sm	BU806	SC06	SP	BUV26F	SC06	SP
BSX60	SC04	Sm	BU807	SC06	SP	BUV26AF	SC06	SP
BSX61	SC04	Sm	BU808	SC06	SP	BUV27	SC06	SP
BT134*	SC03	Tri	BU824	SC06	SP	BUV27A	SC06	SP
BT134W*	SC03	Tri	BU826	SC06	SP	BUV27F	SC06	SP
BT136*	SC03	Tri	BUP22*	SC06	SP	BUV27AF	SC06	SP
BT136F*	SC03	Tri	BUP23*	SC06	SP	BUV28	SC06	SP
BT137*	SC03	Tri	BUS11	SC06	SP	BUV28A	SC06	SP
BT137F*	SC03	Tri	BUS11A	SC06	SP	BUV28F	SC06	SP
BT138*	SC03	Tri	BUS12	SC06	SP	BUV28AF	SC06	SP
BT138F*	SC03	Tri	BUS12A	SC06	SP	BUV47	SC06	SP
BT139*	SC03	Tri	BUS13	SC06	SP	BUV47A	SC06	SP
BT139F*	SC03	Tri	BUS13A	SC06	SP	BUV48	SC06	SP
BT145*	SC03	Tri	BUS14	SC06	SP	BUV48A	SC06	SP
BT148*	SC03	Th	BUS14A	SC06	SP	BUV82	SC06	SP
BT149*	SC03	Th	BUS21*	SC06	SP	BUV83	SC06	SP
BT150	SC03	Th	BUS22*	SC06	SP	BUV89	SC06	SP
BT151*	SC03	Th	BUS23*	SC06	SP	BUV90	SC06	SP
BT151F*	SC03	Th	BUS24*	SC06	SP	BUV90F	SC06	SP
BT152*	SC03	Th	BUS131*	SC06	SP	BUV98(V)	SC06	SP
BT153	SC03	Th	BUS132*	SC06	SP	BUV98A	SC06	SP

Type no.	book	section	Type no.	book	section	Type no.	book	section
BUV298(V)	SC06	SP	BUZ24	S9	PM	BUZ311	S9	PM
BUV298A	SC06	SP	BUZ25	S9	PM	BUZ326	S9	PM
BUW11	SC06	SP	BUZ31	S9	PM	BUZ330	S9	PM
BUW11A	SC06	SP	BUZ32	S9	PM	BUZ331	S9	PM
BUW12	SC06	SP	BUZ34	S9	PM	BUZ347	S9	PM
BUW12A	SC06	SP	BUZ35	S9	PM	BUZ348	S9	PM
BUW12F	SC06	SP	BUZ36	S9	PM	BUZ349	S9	PM
BUW12AF	SC06	SP	BUZ41A	S9	PM	BUZ350	S9	PM
BUW13	SC06	SP	BUZ42	S9	PM	BUZ351	S9	PM
BUW13A	SC06	SP	BUZ45	S9	PM	BUZ355	S9	PM
BUW13F	SC06	SP	BUZ45A	S9	PM	BUZ356	S9	PM
BUW13AF	SC06	SP	BUZ45B	S9	PM	BUZ357	S9	PM
BUW84	SC06	SP	BUZ50A	S9	PM	BUZ358	S9	PM
BUW85	SC06	SP	BUZ50B	S9	PM	BUZ384	S9	PM
BUW86	SC06	SP	BUZ50C	S9	PM	BUZ385	S9	PM
BUW87	SC06	SP	BUZ53A	S9	PM	BY228	SC01	R
BUW87A	SC06	SP	BUZ54	S9	PM	BY229*	SC02	R
BUW131*	SC06	SP	BUZ54A	S9	PM	BY229F*	SC02	R
BUW132*	SC06	SP	BUZ60	S9	PM	BY249*	SC02	R
BUW133*	SC06	SP	BUZ63	S9	PM	BY249F*	SC02	R
BUX46	SC06	SP	BUZ64	S9	PM	BY260*	SC02	R
BUX46A	SC06	SP	BUZ71	S9	PM	BY328	SC01	SD
BUX47	SC06	SP	BUZ71A	S9	PM	BY329*	SC02	R
BUX47A	SC06	SP	BUZ72	S9	PM	BY359*	SC02	R
BUX48	SC06	SP	BUZ72A	S9	PM	BY359F	SC02	R
BUX48A	SC06	SP	BUZ73	S9	PM	BY438	SC01	R
BUX84	SC06	SP	BUZ73A	S9	PM	BY448	SC01	R
BUX84F	SC06	SP	BUZ74	S9	PM	BY458	SC01	R
BUX85	SC06	SP	BUZ74A	S9	PM	BY505	SC01	R
BUX85F	SC06	SP	BUZ76	S9	PM	BY509	SC01	R
BUX86	SC06	SP	BUZ76A	S9	PM	BY527	SC01	R
BUX87	SC06	SP	BUZ78	S9	PM	BY584	SC01	R
BUX88	SC06	SP	BUZ80	S9	PM	BY588	SC01	R
BUX98	SC06	SP	BUZ80A	S9	PM	BY609	SC01	R
BUX98A	SC06	SP	BUZ83	S9	PM	BY610	SC01	R
BUX99	SC06	SP	BUZ83A	S9	PM	BY614	SC01	R
BUY89	SC06	SP	BUZ84	S9	PM	BY619	SC01	R
BUZ10	S9	PM	BUZ84A	S9	PM	BY620	SC01	R
BUZ11	S9	PM	BUZ90	S9	PM	BY627	SC01	R
BUZ11A	S9	PM	BUZ90A	S9	PM	BY705	SC01	R
BUZ14	S9	PM	BUZ94	S9	PM	BY706	SC01	R
BUZ15	S9	PM	BUZ211	S9	PM	BY707	SC01	R
BUZ20	S9	PM	BUZ307	S9	PM	BY708	SC01	R
BUZ21	S9	PM	BUZ308	S9	PM	BY709	SC01	R
BUZ23	S9	PM	BUZ310	S9	PM	BY710	SC01	R

Type no.	book	section	Type no.	book	section	Type no.	book	section
BY711	SC01	R	BYV26*	SC01	R	BYW95C	SC01	R
BY712	SC01	R	BYV27*	SC01	R	BYW96D	SC01	R
BY713	SC01	R	BYV28*	SC01	R	BYW96E	SC01	R
BY714	SC01	R	BYV29*	SC02	R	BYX10G	SC01	R
BY715	SC01	R	BYV29F*	SC02	R	BYX25*	SC02	R
BY716	SC01	R	BYV30*	SC02	R	BYX30*	SC02	R
BY717	SC01	R	BYV31*	SC02	R	BYX38*	SC02	R
BY718	SC01	R	BYV32*	SC02	R	BYX39*	SC02	R
BY719	SC01	R	BYV32F*	SC02	R	BYX42*	SC02	R
BY720	SC01	R	BYV34*	SC02	R	BYX46*	SC02	R
BY721	SC01	R	BYV36*	SC01	R	BYX52*	SC02	R
BY722	SC01	R	BYV42*	SC02	R	BYX56*	SC02	R
BY723	SC01	R	BYV44*	SC02	R	BYX90G	SC01	R
BY724	SC01	R	BYV54V	SC02	R	BYX96*	SC02	R
BYD11*	SC01	R	BYV72*	SC02	R	BYX97*	SC02	R
BYD13*	SC01	R	BYV72F*	SC02	R	BYX98*	SC02	R
BYD14*	SC01	R	BYV74*	SC02	R	BYX99*	SC02	R
BYD17*	SC01/10	R/Mm	BYV74F*	SC02	R	BZD23	SC01	Vrg
BYD31*	SC01	R	BYV79*	SC02	R	BZD27	SC01/10	Vrg/Mm
BYD33*	SC01	R	BYV92*	SC02	R	BZT03	SC01	Vrg
BYD34*	SC01	R	BYV95A	SC01	R	BZV10	SC01	Vrf
BYD37*	SC01/10	R/Mm	BYV95B	SC01	R	BZV11	SC01	Vrf
BYD73*	SC01	R	BYV95C	SC01	R	BZV12	SC01	Vrf
BYD74*	SC01	R	BYV96D	SC01	R	BZV13	SC01	Vrf
BYD77*	SC01	R	BYV96E	SC01	R	BZV14	SC01	Vrf
BYM26*	SC01	R	BYV118*	SC02	R	BZV37	SC01	Vrf
BYM36*	SC01	R	BYV118F*	SC02	R	BZV49*	SC01/10	Vrg/Mm
BYM56*	SC01	R	BYV120*	SC02	R	BZV55*	SC10	Mm
BYP20*	SC02	R	BYV121*	SC02	R	BZV60	SC01	Vrg
BYP21*	SC02	R	BYV133*	SC02	R	BZV80	SC01	Vrf
BYP22*	SC02	R	BYV133F*	SC02	R	BZV81	SC01	Vrf
BYQ27*	SC01	R	BYV143*	SC02	R	BZV85*	SC01	Vrg
BYQ28*	SC02	R	BYV143F*	SC02	R	BZV86	SC01	SD
BYQ28F*	SC02	R	BYW25*	SC02	R	BZW03*	SC01	Vrg
BYR28*	SC02	R	BYW29*	SC02	R	BZW14	SC01	Vrg
BYR29*	SC02	R	BYW29F*	SC02	R	BZW86*	SC02	TS
BYR29F*	SC02	R	BYW30*	SC02	R	BZX55*	SC01	Vrg
BYR30*	SC02	R	BYW31*	SC02	R	BZX70*	SC02	Vrg
BYR34*	SC02	R	BYW54	SC01	R	BZX75*	SC01	Vrg
BYR79*	SC02	R	BYW55	SC01	R	BZX79*	SC01	Vrg
BYT28*	SC02	R	BYW56	SC01	R	BZX84*	SC01/10	Vrg/Mm
BYT79*	SC02	R	BYW92*	SC02	R	BZY91*	SC02	Vrg
BYT230PIV	SC02	R	BYW93*	SC02	R	BZY93*	SC02	Vrg
BYV10*	SC01	R	BYW95A	SC01	R	CNG35	SC12	PhC
BYV24*	SC02	R	BYW95B	SC01	R	CNG36	SC12	PhC

Type no.	book	section	Type no.	book	section	Type no.	book	section
CNG40	SC12	PhC	H11A4	SC12	PhC	LKE1004R	SC15	M
CNG82	SC12	PhC	H11A5	SC12	PhC	LKE2002T	SC15	M
CNG83	SC12	PhC	H11B1	SC12	PhC	LKE2004T	SC15	M
CNR36	SC12	PhC	H11B2	SC12	PhC	LKE2015T	SC15	M
CNS35	SC12	PhC	H11B3	SC12	PhC	LKE21004R	SC15	M
CNW82	SC12	PhC	H11B255	SC12	PhC	LKE21015T	SC15	M
CNW83	SC12	PhC	KGZ10	SC17	SEN	LKE21050T	SC15	M
CNX21	SC12	PhC	KGZ20	SC17	SEN	LKE27010R	SC15	M
CNX35	SC12	PhC	KGZ21	SC17	SEN	LKE27025R	SC15	M
CNX35U	SC12	PhC	KMZ10A	SC17	SEN	LKE32002T	SC15	M
CNX36	SC12	PhC	KMZ10B	SC17	SEN	LKE32004T	SC15	M
CNX36U	SC12	PhC	KMZ10C	SC17	SEN	LTE21009R	SC15	M
CNX38	SC12	PhC	KP100A	SC17	SEN	LTE21015R	SC15	M
CNX38U	SC12	PhC	KP100A1	SC17	SEN	LTE21025R	SC15	M
CNX39	SC12	PhC	KP101A	SC17	SEN	LTE4002S	SC15	M
CNX39U	SC12	PhC	KPZ20G	SC17	SEN	LTE42005S	SC15	M
CNX48	SC12	PhC	KPZ21G	SC17	SEN	LTE42008R	SC15	M
CNX48U	SC12	PhC	KPZ21GE	SC17	SEN	LTE42012R	SC15	M
CNX62	SC12	PhC	KRX10	SC17	SEN	LUE2003S	SC15	M
CNX62A	SC12	PhC	KRX11	SC17	SEN	LUE2009S	SC15	M
CNX71	SC12	PhC	KTY81-100*	SC17	SEN	LV172E50R	SC15	M
CNX72A	SC12	PhC	KTY81-200*	SC17	SEN	LV2024E45R	SC15	M
CNX82A	SC12	PhC	KTY83-100*	SC17	SEN	LV2327E40R	SC15	M
CNX83A	SC12	PhC	KTY84-100*	SC17	SEN	LV2931E50S	SC15	M
CNY17-1	SC12	PhC	KTY85-100*	SC10/17	SEN	LV3742E16R	SC15	M
CNY17-2	SC12	PhC	KTY86-205	SC17	SEN	LV3742E24R	SC15	M
CNY17-3	SC12	PhC	KTY87-205	SC17	SEN	LVE21050R	SC15	M
CNY17-4	SC12	PhC	LAE2001R	SC15	M	LWE2015R	SC15	M
CQW58A	S8a	I	LAE4000Q	SC15	M	LWE2025R	SC15	M
CQW89A	S8a	I	LAE4001R	SC15	M	LZ1418E100R	SC15	M
CQW89B	S8a	I	LAE4002S	SC15	M	MCA230	SC12	PhC
CQY58A	S8a	I	LAE6000Q	SC15	M	MCA231	SC12	PhC
CQY89A	S8a	I	LBE1004R	SC15	M	MCA255	SC12	PhC
CQY89F	S8a	I	LBE1010R	SC15	M	MCT2	SC12	PhC
ESM3045A(V)	SC06	SP	LBE2003S	SC15	M	MCT26	SC12	PhC
ESM3045D(V)	SC06	SP	LBE2005Q	SC15	M	MJE13004	SC06	SP
ESM4045A(V)	SC06	SP	LBE2008T	SC15	M	MJE13005	SC06	SP
ESM4045D(V)	SC06	SP	LBE2009S	SC15	M	MJE13006	SC06	SP
ESM5045D(V)	SC06	SP	LCE1004R	SC15	M	MJE13007	SC06	SP
ESM6045A(V)	SC06	SP	LCE1010R	SC15	M	MJE13008	SC06	SP
ESM6045D(V)	SC06	SP	LCE2003S	SC15	M	MJE13009	SC06	SP
Fresnel-lens	SC12	A	LCE2005Q	SC15	M	MKB12040WS	SC15	M
H11A1	SC12	PhC	LCE2008T	SC15	M	MKB12100WS	SC15	M
H11A2	SC12	PhC	LCE2009S	SC15	M	MKB12140W	SC15	M
H11A3	SC12	PhC	LJE42002T	SC15	M	M06075B200Z	SC15	M

Type no.	book	section	Type no.	book	section	Type no.	book	section
M06075B400Z	SC15	M	OM337	SC14	WBM	PEE1001U	SC15	M
MPS6513	SC04	Sm	OM337A	SC14	WBM	PEE1003U	SC15	M
MPS6514	SC04	Sm	OM339	SC14	WBM	PEE1005U	SC15	M
MPS6515	SC04	Sm	OM345	SC14	WBM	PEE1010U	SC15	M
MPS6517	SC04	Sm	OM350	SC14	WBM	PH2222/A	SC04	Sm
MPS6518	SC04	Sm	OM360	SC14	WBM	PH2369	SC04	Sm
MPS6519	SC04	Sm	OM361	SC14	WBM	PH2907	SC04	Sm
MPS6520	SC04	Sm	OM370	SC14	WBM	PH2907A	SC04	Sm
MPS6521	SC04	Sm	OM386B	SC17	SEN	PH5415	SC04	Sm
MPS6522	SC04	Sm	OM386M	SC17	SEN	PH5416	SC04	Sm
MPS6523	SC04	Sm	OM387B	SC17	SEN	PH6659	SC07	FET
MPSA05	SC04	Sm	OM387M	SC17	SEN	PH6660	SC07	FET
MPSA06	SC04	Sm	OM388B	SC17	SEN	PH6661	SC07	FET
MPSA13	SC04	Sm	OM389B	SC17	SEN	PH13002	SC06	SP
MPSA14	SC04	Sm	OM390	SC17	SEN	PH13003	SC06	SP
MPSA42	SC04	Sm	OM391	SC17	SEN	PKB3001U	SC15	M
MPSA43	SC04	Sm	OM931	SC05	P	PKB3003U	SC15	M
MPSA55	SC04	Sm	OM961	SC05	P	PKB3005U	SC15	M
MPSA56	SC04	Sm	OSB/M/S9115*	SC02	St	PKB12005U	SC15	M
MPSA63	SC04	Sm	OSB/M/S9215*	SC02	St	PKB20010U	SC15	M
MPSA64	SC04	Sm	OSB/M/S9415*	SC02	St	PKB23001U	SC15	M
MPSA92	SC04	Sm	OSM9510-12	SC02	St	PKB23003U	SC15	M
MPSA93	SC04	Sm	P2105	SC17	SEN	PKB23005U	SC15	M
MRB11080Y	SC15	M	PBYR635/40/45CT	SC02	R	PKB25006T	SC15	M
MRB11175Y	SC15	M	PBYR735/40/45	SC02	R	PKB32001U	SC15	M
MRB11350Y	SC15	M	PBYR735/40/45F	SC02	R	PKB32003U	SC15	M
MRB12175YR	SC15	M	PBYR1035/40/45	SC02	R	PKB32005U	SC15	M
MRB12350YR	SC15	M	PBYR1035/40/45F	SC02	R	PLED-G313A	S8a	LED
MS1011B700Y	SC15	M	PBYR1535/40/45CT	SC02	R	PLED-G313N	S8a	LED
MS6075B800Z	SC15	M	PBYR1535/40/45CTF	SC02	R	PLED-G314A	S8a	LED
MSB11900Y	SC15	M	PBYR1635/40/45	SC02	R	PLED-G314N	S8a	LED
MSB12900Y	SC15	M	PBYR1635/40/45F	SC02	R	PLED-G511C	S8a	LED
MZ0912B75Y	SC15	M	PBYR2035/40/45CT	SC02	R	PLED-G513C	S8a	LED
MZ0912B150Y	SC15	M	PBYR2035/40/45CTF	SC02	R	PLED-G513M	S8a	LED
OM286	SC17	SEN	PBYR2535/40/45CT	SC02	R	PLED-G514B	S8a	LED
OM286M	SC17	SEN	PBYR2535/40/45CTF	SC02	R	PLED-G514M	S8a	LED
OM287	SC17	SEN	PBYR3035/40/45PT	SC02	R	PLED-G544KL	S8a	LED
OM287M	SC17	SEN	PBYR12035/40/45TV	SC02	R	PLED-G544LL	S8a	LED
OM320	SC14	WBM	PBYR16035/40/45TV	SC02	R	PLED-GR14E	S8a	LED
OM321	SC14	WBM	PBYR30035/40/45CT	SC02	R	PLED-GR14F	S8a	LED
OM322	SC14	WBM	PBYR40035/40/45CT	SC02	R	PLED-GR14G	S8a	LED
OM323	SC14	WBM	PDE1001U	SC15	M	PLED-GR44DL	S8a	LED
OM323A	SC14	WBM	PDE1003U	SC15	M	PLED-H313A	S8a	LED
OM335	SC14	WBM	PDE1005U	SC15	M	PLED-H314A	S8a	LED
OM336	SC14	WBM	PDE1010U	SC15	M	PLED-H511C	S8a	LED

Type no.	book	section	Type no.	book	section	Type no.	book	section
PLED-H514B	S8a	LED	PMBF4392	SC07/10	FET/Mm	PN2369	SC04	Sm
PLED-H544KL	S8a	LED	PMBF4393	SC07/10	FET/Mm	PN2907	SC04	Sm
PLED-H544LL	S8a	LED	PMBFJ174	SC07/10	FET/Mm	PN2907A	SC04	Sm
PLED-HR14E	S8a	LED	PMBJF175	SC07/10	FET/Mm	PN3439	SC04	Sm
PLED-HR14F	S8a	LED	PMBJF176	SC07/10	FET/Mm	PN3440	SC04	Sm
PLED-HR14G	S8a	LED	PMBJF177	SC07/10	FET/Mm	PN4391	SC07	FET
PLED-HR44DL	S8a	LED	PMBT2222	SC10	Mm	PN4392	SC07	FET
PLED-0313N	S8a	LED	PMBT2222A	SC10	Mm	PN4393	SC07	FET
PLED-0314N	S8a	LED	PMBT2369	SC10	Mm	PN5415	SC04	Sm
PLED-0513M	S8a	LED	PMBT2907	SC10	Mm	PN5416	SC04	Sm
PLED-0514M	S8a	LED	PMBT2907A	SC10	Mm	PO44	SC12	PhC
PLED-P313N	S8a	LED	PMBT3903	SC10	Mm	PO44A	SC12	PhC
PLED-P314N	S8a	LED	PMBT3904	SC10	Mm	PPC5001T	SC15	M
PLED-P513M	S8a	LED	PMBT3906	SC10	Mm	PQC5001T	SC15	M
PLED-P514M	S8a	LED	PMBT4401	SC10	Mm	PTB23001X	SC15	M
PLED-T512B	S8a	LED	PMBT4403	SC10	Mm	PTB23003X	SC15	M
PLED-TR12E	S8a	LED	PMBT5088	SC10	Mm	PTB23005X	SC15	M
PLED-TR12F	S8a	LED	PMBT5401	SC10	Mm	PTB32001X	SC15	M
PLED-TR12G	S8a	LED	PMBT5550	SC10	Mm	PTB32003X	SC15	M
PLED-TR42DL	S8a	LED	PMBT5551	SC10	Mm	PTB32005X	SC15	M
PLED-Y313A	S8a	LED	PMBT6428	SC10	Mm	PTB42001X	SC15	M
PLED-Y313N	S8a	LED	PMBT6429	SC10	Mm	PTB42002X	SC15	M
PLED-Y314A	S8a	LED	PMBTA05	SC10	Mm	PTB42003X	SC15	M
PLED-Y314N	S8a	LED	PMBTA06	SC10	Mm	PV3742B4X	SC15	M
PLED-Y511C	S8a	LED	PMBTA13	SC10	Mm	PVB42004X	SC15	M
PLED-Y513C	S8a	LED	PMBTA14	SC10	Mm	PXT2222	SC10	Mm
PLED-Y513M	S8a	LED	PMBTA42	SC10	Mm	PXT2222A	SC10	Mm
PLED-Y514B	S8a	LED	PMBTA43	SC10	Mm	PXT2907	SC10	Mm
PLED-Y514M	S8a	LED	PMBTA55	SC10	Mm	PXT2907A	SC10	Mm
PLED-Y544KL	S8a	LED	PMBTA56	SC10	Mm	PXT3904	SC10	Mm
PLED-Y544LL	S8a	LED	PMBTA63	SC10	Mm	PXT3906	SC10	Mm
PLED-YR14E	S8a	LED	PMBTA64	SC10	Mm	PXT4401	SC10	Mm
PLED-YR14F	S8a	LED	PMBTA92	SC10	Mm	PXT4403	SC10	Mm
PLED-YR14G	S8a	LED	PMBTA93	SC10	Mm	PXTA14	SC10	Mm
PLED-YR44DL	S8a	LED	PMBZ5226	SC01	SD	PXTA27	SC10	Mm
PMBD914	SC01	SD	PMLL4148	SC01/10	SD/Mm	PXTA64	SC10	Mm
PMBD2835	SC01	SD	PMLL4150	SC10/10	SD/Mm	PXTA77	SC10	Mm
PMBD2836	SC01	SD	PMLL4151	SC10/10	SD/Mm	PZ1418B15U	SC15	M
PMBD2837	SC01	SD	PMLL4153	SC10/10	SD/Mm	PZ1418B30U	SC15	M
PMBD2838	SC01	SD	PMLL4446	SC10/10	SD/Mm	PZ1721B12U	SC15	M
PMBD6050	SC01	SD	PMLL4448	SC10/10	SD/Mm	PZ1721B25U	SC15	M
PMBD6100	SC01	SD	PMLL5225B to	SC10/10	SD/Mm	PZ2024B10U	SC15	M
PMBD7000	SC01	SD	PMLL5267B	SC01/10	SD/Mm	PZ2024B20U	SC15	M
PMBF170	SC07/10	FET/Mm	PN2222	SC04	Sm	PZ2327B15U	SC15	M
PMBF4391	SC07/10	FET/Mm	PN2222A	SC04	Sm	PZB16035U	SC15	M

Type no.	book	section	Type no.	book	section	Type no.	book	section
PZB16040U	SC15	M	RZ3135B40W	SC15	M	TIP147	SC05	P
PZB27020U	SC15	M	RZ3135B50W	SC15	M	TIP2955	SC05	P
PZT2222	SC10	Mm	RZB12050Y	SC15	M	TIP2955T	SC05	P
PZT2222A	SC10	Mm	RZB12100Y	SC15	M	TIP3055	SC05	P
PZT2907	SC10	Mm	RZB12250Y	SC15	M	TIP3055T	SC05	P
PZT2907A	SC10	Mm	SL5500	SC12	PhC	1N821	SC01	Vrf
PZT3904	SC10	Mm	SL5501	SC12	PhC	1N821A	SC01	Vrf
PZT3906	SC10	Mm	SL5504	SC12	PhC	1N823	SC01	Vrf
PZTA13	SC10	Mm	SL5505S	SC12	PhC	1N823A	SC01	Vrf
PZTA14	SC10	Mm	SL5511	SC12	PhC	1N825	SC01	Vrf
PZTA42	SC10	Mm	TIP29*	SC05	P	1N825A	SC01	Vrf
PZTA43	SC10	Mm	TIP30*	SC05	P	1N827	SC01	Vrf
PZTA63	SC10	Mm	TIP31*	SC05	P	1N827A	SC01	Vrf
PZTA64	SC10	Mm	TIP32*	SC05	P	1N829	SC01	Vrf
PZTA92	SC10	Mm	TIP33*	SC05	P	1N829A	SC01	Vrf
PZTA93	SC10	Mm	TIP34*	SC05	P	1N914	SC01	SD
RPW100	SC17	SEN	TIP41*	SC05	P	1N916	SC01	SD
RPW101	SC17	SEN	TIP42*	SC05	P	1N4001D	SC01	R
RPW102	SC17	SEN	TIP47	SC06	P	1N4002D	SC01	R
RPY100	SC17	SEN	TIP48	SC06	P	1N4003D	SC01	R
RPY102	SC17	SEN	TIP49	SC06	P	1N4004D	SC01	R
RPY107	SC17	SEN	TIP50	SC06	P	1N4005D	SC01	R
RPY109	SC17	SEN	TIP110	SC05	P	1N4006D	SC01	R
RPY222	SC17	SEN	TIP111	SC05	P	1N4007D	SC01	R
RV2833B5X	SC15	M	TIP112	SC05	P	1N4001G	SC01	R
RV3135B5X	SC15	M	TIP115	SC05	P	1N4002G	SC01	R
RX1011B250Y	SC15	M	TIP116	SC05	P	1N4003G	SC01	R
RX1011B350Y	SC15	M	TIP117	SC05	P	1N4004G	SC01	R
RX1214B150Y	SC15	M	TIP120	SC05	P	1N4005G	SC01	R
RX1214B300Y	SC15	M	TIP121	SC05	P	1N4006G	SC01	R
RX2731B90W	SC15	M	TIP122	SC05	P	1N4007G	SC01	R
RX3034B70W	SC15	M	TIP125	SC05	P	1N4148	SC01	SD
RXB12350Y	SC15	M	TIP126	SC05	P	1N4150	SC01	SD
RZ1214B35Y	SC15	M	TIP127	SC05	P	1N4151	SC01	SD
RZ1214B65Y	SC15	M	TIP130	SC05	P	1N4153	SC01	SD
RZ1214B125Y	SC15	M	TIP131	SC05	P	1N4446	SC01	SD
RZ1214B150Y	SC15	M	TIP132	SC05	P	1N4448	SC01	SD
RZ2731B45W	SC15	M	TIP135	SC05	P	1N4531	SC01	SD
RZ2731B60W	SC15	M	TIP136	SC05	P	1N4532	SC01	SD
RZ2833B15W	SC15	M	TIP137	SC05	P	1N4933	SC01	R
RZ2833B30W	SC15	M	TIP140	SC05	P	1N5059	SC01	R
RZ2833B45W	SC15	M	TIP141	SC05	P	1N5060	SC01	R
RZ2833B60W	SC15	M	TIP142	SC05	P	1N5061	SC01	R
RZ3135B15W	SC15	M	TIP145	SC05	P	1N5062	SC01	R
RZ3135B30W	SC15	M	TIP146	SC05	P	1N5225 to	SC01	R

Type no.	book	section
1N5267B	SC01	R
2N918	SC14	WBT
2N930	SC04	Sm
2N1613	SC04	Sm
2N1711	SC04	Sm
2N1893	SC04	Sm
2N2219	SC04	Sm
2N2219A	SC04	Sm
2N2222	SC04	Sm
2N2222A	SC04	Sm
2N2297	SC04	Sm
2N2369	SC04	Sm
2N2369A	SC04	Sm
2N2483	SC04	Sm
2N2484	SC04	Sm
2N2904	SC04	Sm
2N2904A	SC04	Sm
2N2905	SC04	Sm
2N2905A	SC04	Sm
2N2906	SC04	Sm
2N2906A	SC04	Sm
2N2907	SC04	Sm
2N2907A	SC04	Sm
2N3019	SC04	Sm
2N3020	SC04	Sm
2N3053	SC04	Sm
2N3375	SC08	RFP
2N3553	SC08	RFP
2N3632	SC08	RFP
2N3822	SC07	FET
2N3823	SC07	FET
2N3866	SC08	RFP
2N3903	SC04	Sm
2N3904	SC04	Sm
2N3905	SC04	Sm
2N3906	SC04	Sm
2N3924	SC08	RFP
2N3926	SC08	RFP
2N3927	SC08	RFP
2N3966	SC07	FET
2N4030	SC04	Sm
2N4031	SC04	Sm
2N4032	SC04	Sm
2N4033	SC04	Sm
2N4091	SC07	FET

Type no.	book	section
2N4092	SC07	FET
2N4093	SC07	FET
2N4123	SC04	Sm
2N4124	SC04	Sm
2N4125	SC04	Sm
2N4126	SC04	Sm
2N4391	SC07	FET
2N4392	SC07	FET
2N4393	SC07	FET
2N4400	SC04	Sm
2N4401	SC04	Sm
2N4402	SC04	Sm
2N4403	SC04	Sm
2N4427	SC08	RFP
2N4856	SC07	FET
2N4857	SC07	FET
2N4858	SC07	FET
2N4859	SC07	FET
2N4860	SC07	FET
2N4861	SC07	FET
2N5064	SC03	Tri
2N5086	SC04	Sm
2N5087	SC04	Sm
2N5088	SC04	Sm
2N5089	SC04	Sm
2N5400	SC04	Sm
2N5401	SC04	Sm
2N5415	SC04	Sm
2N5416	SC04	Sm
2N5550	SC04	Sm
2N5551	SC04	Sm
2N6659	SC07	FET
2N6660	SC07	FET
2N6661	SC07	FET
4N25	SC12	PhC
4N25A	SC12	PhC
4N26	SC12	PhC
4N27	SC12	PhC
4N28	SC12	PhC
4N29	SC12	PhC
4N30	SC12	PhC
4N31	SC12	PhC
4N32	SC12	PhC
4N33	SC12	PhC
4N35	SC12	PhC

Type no.	book	section
4N36	SC12	PhC
4N37	SC12	PhC
4N38	SC12	PhC
4N38A	SC12	PhC
4N46	SC12	PhC
6N135	SC12	PhC
6N136	SC12	PhC
56201d	SC06	A
56201j	SC06	A
56245	SC04/14	A
56246	SC04/14	A
56261a	SC06	A
56264	SC03	A
56264a	SC02/03	A
56264b	SC02/03	A
56295	SC03	A
56295a	SC02/03	A
56295b	SC02/03	A
56295c	SC02/03	A
56326	SC06	A
56339	SC06	A
56352	SC06	A
56353	SC06/03	A
56354	SC06/03	A
56359b	SC02/03	A
56359c	SC02/03	A
56359d	SC02/03	A
56360a	SC02/03	A
56363	SC02/03	A
56364	SC02/03	A
56367	SC02/03	A
56368b	SC02/03	A
56368c	SC02/03	A
56369	SC02/03	A
56378	SC02/03	A
56379	SC02/03	A
56387a	SC06	A
56387b	SC06	A
56397	SC01	A

NOTES

DATA HANDBOOK SYSTEM

DATA HANDBOOK SYSTEM

Our Data Handbook System comprises more than 60 books with specifications on electronic components, subassemblies and materials. It is made up of six series of handbooks:

INTEGRATED CIRCUITS

DISCRETE SEMICONDUCTORS

DISPLAY COMPONENTS

PASSIVE COMPONENTS*

PROFESSIONAL COMPONENTS**

MATERIALS*

The contents of each series are listed on pages iii to viii.

The data handbooks contain all pertinent data available at the time of publication, and each is revised and reissued periodically.

When ratings or specifications differ from those published in the preceding edition they are indicated with arrows in the page margin. Where application is given it is advisory and does not form part of the product specification.

Condensed data on the preferred products of Philips Components is given in our Preferred Type Range catalogue (issued annually).

Information on current Data Handbooks and how to obtain a subscription for future issues is available from any of the Organizations listed on the back cover.
Product specialists are at your service and enquiries will be answered promptly.

* Will replace the Components and materials (green) series of handbooks.
** Will replace the Electron tubes (blue) series of handbooks.

INTEGRATED CIRCUITS

This series of handbooks comprises:

code	handbook title
IC01	**Radio, audio and associated systems** Bipolar, MOS
IC02a/b	**Video and associated systems** Bipolar, MOS
IC03	**ICs for Telecom** Bipolar, MOS Subscriber sets, Cordless Telephones
IC04	**HE4000B logic family** CMOS
IC05	**Advanced Low-power Schottky (ALS) Logic Series**
IC06	**High-speed CMOS; PC74HC/HCT/HCU** Logic family
IC07	**Advanced CMOS logic (ACL)**
IC08	**ECL 10K and 100K logic families**
IC09	**TTL logic series**
IC10	**Memories** MOS, TTL, ECL
IC11	**Linear Products**
IC12	**I^2C-bus compatible ICs**
IC13	**Semi-custom** Programmable Logic Devices (PLD)
IC14	**Microcontrollers** NMOS, CMOS
IC15	**FAST TTL logic series**
IC16	**CMOS integrated circuits for clocks and watches**
IC17	**ICs for Telecom** Bipolar, MOS Radio pagers Mobile telephones ISDN
IC18	**Microprocessors and peripherals**
IC19	**Data communication products**

DISCRETE SEMICONDUCTORS

This series of data handbooks comprises:

current code	new code	handbook title
S1	**SC01**	**Diodes** High-voltage tripler units
S2a	**SC02**	**Power diodes**
S2b	**SC03**	**Thyristors and triacs**
S3	**SC04**	**Small-signal transistors**
S4a	**SC05**	**Low-frequency power transistors and hybrid IC power modules**
S4b	**SC06**	**High-voltage and switching power transistors**
S5	**SC07**	**Small-signal field-effect transistors**
S6	**SC08**	**RF power transistors**
	SC09	**RF power modules**
S7	**SC10**	**Surface mounted semiconductors**
S8a	**SC11***	**Light emitting diodes**
S8b	**SC12**	**Optocouplers**
S9	**SC13***	**PowerMOS transistors**
S10	**SC14**	**Wideband transistors and wideband hybrid IC modules**
S11	**SC15**	**Microwave transistors**
S15**	**SC16**	**Laser diodes**
S13	**SC17**	**Semiconductor sensors**
S14	**SC18***	**Liquid crystal displays and driver ICs for LCDs**

* Not yet issued with the new code in this series of handbooks.
** New handbook in this series; will be issued shortly.

DISPLAY COMPONENTS

This series of data handbooks comprises:

current code	new code	handbook title
T8	**DC01**	**Colour display components**
T16	**DC02**	**Monochrome monitor tubes and deflection units**
C2	**DC03**	**Television tuners, coaxial aerial input assemblies**
C3	**DC04**	**Loudspeakers**
C20	**DC05**	**Flyback transformers, mains transformers and general-purpose FXC assemblies**

* These handbooks are currently issued in another series; they are not yet issued in the Display Components series of handbooks.

PASSIVE COMPONENTS

This series of data handbooks comprises:

current code	new code	handbook title
C14	**PA01**	**Electrolytic capacitors; solid and non-solid**
C11	**PA02**	**Varistors, thermistors and sensors**
C12	**PA03**	**Potentiometers and switches**
C7	**PA04**	**Variable capacitors**
C22	**PA05***	**Film capacitors**
C15	**PA06***	**Ceramic capacitors**
C9	**PA07***	**Piezoelectric quartz devices**
C13	**PA08**	**Fixed resistors**

* Not yet issued with the new code in this series of handbooks.

PROFESSIONAL COMPONENTS

This series of data handbooks comprises:

current code	new code	handbook title
T1	*	Power tubes for RF heating and communications
T2a	*	Transmitting tubes for communications, glass types
T2b	*	Transmitting tubes for communications, ceramic types
T3	PC01	High-power klystrons and accessories
T4	*	Magnetrons for microwave heating
T5	PC02**	Cathode-ray tubes
T6	PC03**	Geiger-Müller tubes
T9	PC04	Photo multipliers
T10	PC05	Plumbicon camera tubes and accessories
T11	PC06	Circulators and Isolators
T12	PC07	Vidicon and Newvicon camera tubes and deflection units
T13	PC08	Image intensifiers
T15	PC09	Dry-reed switches
C8	PC10	Variable mains transformers; annular fixed transformers
	PC11	Solid state image sensors and peripheral integrated circuits
T9	PC12**	Electron multipliers

* These handbooks will not be reissued.
** Not yet issued with the new code in this series of handbooks.

MATERIALS

This series of data handbooks comprises:

current code	new code	handbook title
C4 } **C5** }	**MA01***	**Soft Ferrites**
C16	**MA02****	**Permanent magnet materials**
C19	**MA03****	**Piezoelectric ceramics**

* Handbooks C4 and C5 will be reissued as one handbook having the new code MA01.

** Not yet issued with the new code in this series of handbooks.

Philips Components – a worldwide company

Argentina: PHILIPS ARGENTINA S.A., Div. Philips Components, Vedia 3892, 1430 BUENOS AIRES, Tel. (01) 541-4261.
Australia: PHILIPS COMPONENTS PTY Ltd, 11 Waltham Street, ARTARMON, N.S.W. 2064, Tel. (02) 439 3322.
Austria: ÖSTERREICHISCHE PHILIPS INDUSTRIE G.m.b.H., UB Bauelemente, Triester Str. 64, 1101 WIEN, Tel. (0222) 60 101-820.
Belgium: N.V PHILIPS PROF. SYSTEMS – Components Div., 80 Rue Des Deux Gares, B-1070 BRUXELLES, Tel. (02) 52 56 111.
Brazil: PHILIPS COMPONENTS (Active Devices) Av. das Nacoes Unidas, 12495-SAO PAULO-SP, CEP 04578, P.O. Box 7383, Tel. (011) 534-2211.
PHILIPS COMPONENTS (Passive Devices & Materials) Av. Francisco Monteiro 702, RIBEIRAO PIRES-SP, CEP 09400, Tel. (011) 459-8211.
Canada: PHILIPS ELECTRONICS LTD., Philips Components, 601 Milner Ave., SCARBOROUGH, Ontario, M1B 1M8, Tel. (416) 292-5161.
(IC Products) SIGNETICS CANADA LTD., 1 Eva Road, Suite 411, ETOBICOKE, Ontario, M9C 4Z5, Tel. (416) 626-6676.
Chile: PHILIPS CHILENA S.A., Av. Santa Maria 0760, SANTIAGO, Tel. (02) 77 38 16.
Colombia: IPRELENSO LTDA., Carrera 21 No. 56-17, BOGOTA, D.E., P.O. Box 77621, Tel. (01) 2 49 76 24.
Denmark: PHILIPS COMPONENTS A/S, Prags Boulevard 80, PB 1919, DK-2300 COPENHAGEN S, Tel. 01-54 11 33.
Finland: PHILIPS COMPONENTS, Sinikalliontie 3, SF-2630 ESPOO, Tel. 358-0-50 261.
France: PHILIPS COMPOSANTS, 117 Quai du Président Roosevelt, 92134 ISSY-LES-MOULINEAUX Cedex, Tel. (01) 40 93 80 00.
Germany (Fed. Republic): PHILIPS COMPONENTS UB der Philips G.m.b.H., Valvo Haus, Burchardstrasse 19, D-2 HAMBURG 1, Tel. (040) 3296-0.
Greece: PHILIPS HELLENIQUE S.A., Components Division, No. 15, 25th March Street, GR 17778 TAVROS, Tel. (01) 48 94 339/48 94 911.
Hong Kong: PHILIPS HONG KONG LTD., Components Div., 15/F Philips Ind. Bldg., 24-28 Kung Yip St., KWAI CHUNG, Tel. (0)-42 45 121.
India: PEICO ELECTRONICS & ELECTRICALS LTD., Components Dept., Shivsagar Estate 'A' Block, P.O. Box 6598, 254-D Dr. Annie Besant Rd., BOMBAY – 400 025, Tel. (022) 49 21 500-49 21 515.
Indonesia: P.T. PHILIPS-RALIN ELECTRONICS, Components Div., Setiabudi II Building, 6th Fl., Jalan H.R. Rasuna Said (P.O. Box 223/KBY) Kuningan, JAKARTA 12910, Tel. (021) 51 79 95.
Ireland: PHILIPS ELECTRONICS (IRELAND) LTD., Components Division, Newstead, Clonskeagh, DUBLIN 14, Tel. (01) 69 33 55.
Italy: PHILIPS S.p.A., Philips Components, Piazza IV Novembre 3, I-20124 MILANO, Tel. (02) 6752.1.
Japan: PHILIPS JAPAN LTD,. Components Division, Philips Bldg 13-37, Kohnan 2-chome, Minato-ku, TOKYO 108, Tel. (03) 740-5028.
Korea (Republic of): PHILIPS ELECTRONICS (KOREA) LTD. Components Division, Philips House, 260-199 Itaewon-dong, Yongsan-ku, SEOUL, Tel. (02) 794-5011.
Malaysia: PHILIPS MALAYSIA SDN BHD, Components Div., 3 Jalan SS15/2A SUBANG, 47500 PETALING JAYA, Tel. (03) 73 45 511.
Mexico: PHILIPS COMPONENTS, Paseo Triunfo de la Republica, No 215 Local 5, Cd Juarez CHI HUA HUA 32340 MEXICO Tel. (16) 18-67-01/02.
Netherlands: PHILIPS NEDERLAND B.V., Marktgroep Philips Components, Postbus 90050, 5600 PB EINDHOVEN, Tel. (040) 78 37 49.
New Zealand: PHILIPS NEW ZEALAND LTD., Components Division, 110 Mt. Eden Road, C.P.O. Box 1041, AUCKLAND, Tel. (09) 605 914.
Norway: NORSK A/S PHILIPS, Philips Components, Box 1, Manglerud 0612, OSLO, Tel. (02) 68 02 00.
Pakistan: PHILIPS ELECTRICAL CO. OF PAKISTAN LTD., Philips Markaz, M.A. Jinnah Rd., KARACHI-3, Tel. (021) 72 57 72.
Peru: CADESA, Carretera Central 6.500, LIMA 3, Apartado 5612, Tel. 51-14-35 00 59.
Philippines: PHILIPS INDUSTRIAL DEV. INC., 2246 Pasong Tamo, P.O. Box 911, Makati Comm. Centre, MAKATI-RIZAL 3116, Tel. (02) 868 9 51 to 59.
Portugal: PHILIPS PORTUGUESA S.A.R.L., Av. Eng. Duarte Pacheco 6, 1009 LISBOA Codex, Tel. (019) 68 31 21.
Singapore: PHILIPS SINGAPORE, PTE LTD., Components Div., Lorong 1, Toa Payoh, SINGAPORE 1231, Tel. 35 02 000.
South Africa: S.A. PHILIPS PTY LTD., Components Division, JOHANNESBURG 2000, P.O. Box 7430.
Spain: PHILIPS COMPONENTS, Balmes 22, 08007 BARCELONA, Tel. (03) 301 63 12.
Sweden: PHILIPS COMPONENTS, A.B., Tegeluddsvägen 1, S-11584 STOCKHOLM, Tel. (0)8-78 21 000.
Switzerland: PHILIPS A.G., Components Dept., Allmendstrasse 140-142, CH-8027 ZÜRICH, Tel. (01) 488 22 11.
Taiwan: PHILIPS TAIWAN LTD., 581 Min Sheng East Road, P.O. Box 22978, TAIPEI 10446, Taiwan, Tel. 886-2-5005899.
Thailand: PHILIPS ELECTRICAL CO. OF THAILAND LTD., 283 Silom Road, P.0. Box 961, BANGKOK, Tel. (02) 233-6330-9.
Turkey: TÜRK PHILIPS TICARET A.S., Philips Components, Talatpasa Cad. No. 5, 80640 LEVENT/ISTANBUL, Tel. (01) 179 27 70.
United Kingdom: PHILIPS COMPONENTS LTD., Mullard House, Torrington Place, LONDON WC1E 7HD, Tel. (071) 580 6633.
United States: (Colour picture tubes – Monochrome & Colour Display Tubes) PHILIPS DISPLAY COMPONENTS COMPANY, 1600 Huron Parkway, P.O. Box 963, ANN ARBOR, Michigan 48106, Tel. 313/996-9400.
(IC Products) SIGNETICS CORPORATION, 811 East Arques Avenue, SUNNYVALE, CA 94088-3409, Tel. (408) 991-2000.
(Passive Components, Discrete Semiconductors, Materials and Professional Components) PHILIPS COMPONENTS, Discrete Products Division, 2001 West Blue Heron Blvd., P.O. Box 10330, RIVIERA BEACH, Florida 33404, Tel. (407) 881-3200.
Uruguay: PHILIPS COMPONENTS, Coronel Mora 433, MONTEVIDEO, Tel. (02) 70-40 44.
Venezuela: MAGNETICA S.A., Calle 6, Ed. Las Tres Jotas, CARACAS 1074A, App. Post. 78117, Tel. (02) 241 75 09.
Zimbabwe: PHILIPS ELECTRICAL (PVT) LTD., 62 Mutare Road, HARARE, P.O. Box 994, Tel. 47211.

For all other countries apply to: Philips Components Division, Strategic Accounts and International Sales, P.O. Box 218, 5600 MD EINDHOVEN, The Netherlands, Telex 35000 phtcnl, Fax. +31-40-723753

AS81

© Philips Export B.V. 1990

All rights are reserved. Reproduction in whole or in part is prohibited without the prior written consent of the copyright owner.

The information presented in this document does not form part of any quotation or contract, is believed to be accurate and reliable and may be changed without notice. No liability will be accepted by the publisher for any consequence of its use. Publication thereof does not convey nor imply any license under patent- or other industrial or intellectual property rights.

Printed in The Netherlands 9398 163 90011

Philips Components

PHILIPS

PHILIPS